2922

LARGO (MIRA BAY)

REVISION SCHEDULE:

NO:	DATE:	DESCRIPTION:	BY:
1	03/30/20	CENTERED FRONT DOOR & ADDED OPT. LT AND CABINETS	C.C.

SHEET INDEX:

00	COVER SHEET
A1.ABC	SLAB PLAN
A2.A	FIRST FLOOR PLAN "A"
A2.B	FIRST FLOOR PLAN "B"
A2.C	FIRST FLOOR PLAN "C"
A3.A	SECOND FLOOR PLAN "A"
A3.B	SECOND FLOOR PLAN "B"
A3.C	SECOND FLOOR PLAN "C"
A4.A	EXT. ELEVATION A, FRONT & REAR
A4.B	EXT. ELEVATION B, FRONT & REAR
A4.C	EXT. ELEVATION C, FRONT & REAR
A5.A	EXT. ELEVATION A, LEFT & RIGHT
A5.B	EXT. ELEVATION B, LEFT & RIGHT
A5.C	EXT. ELEVATION C, LEFT & RIGHT
A6	STAIR SECTION
A7.ABC	FIRST FLOOR ELECTRICAL PLAN "A,B,&C"
A8.A	SECOND FLOOR ELECTRICAL PLAN "A"
A8.B	SECOND FLOOR ELECTRICAL PLAN "B"
A8.C	SECOND FLOOR ELECTRICAL PLAN "C"
S1.A	FOUNDATION PLAN "A"
S1.B	FOUNDATION PLAN "B"
S1.C	FOUNDATION PLAN "C"
S2.A	PRE-CAST LINTEL PLAN "A"
S2.B	PRE-CAST LINTEL PLAN "B"
S2.C	PRE-CAST LINTEL PLAN "C"
S3.A	FLOOR FRAMING PLAN "A"
S3.B	FLOOR FRAMING PLAN "B"
S3.C	FLOOR FRAMING PLAN "C"
S4.A	ROOF FRAMING PLAN "A"
S4.B	ROOF FRAMING PLAN "B"
S4.C	ROOF FRAMING PLAN "C"
SD.1	STRUCTURAL NOTES & DETAILS
SD.2	STRUCTURAL DETAILS
SD.3	STRUCTURAL DETAILS
SD.4	STRUCTURAL DETAILS
SD.5	STRUCTURAL DETAILS
SD.6	STRUCTURAL DETAILS
SD.7	STRUCTURAL DETAILS
SD.8	STRUCTURAL DETAILS

THOMPSON ENGINEERING GROUP, INC.
4401 Vineland Road Suite A6 Orlando, FL 32811
Ph: (407) 734-1450
Fax: (407) 734-1790
www.tegfl.com

815 Orienta Ave. Suite# 1040
Altamonte Springs, FL. 32701
Ph: (407) 629-6711
Fax: (407) 629-6776
www.mjshomedesigns.com

WRITTEN DIMENSIONS SHALL HAVE PRECEDENCE OVER SCALE DIMENSIONS.
Contractors shall verify and report errors, omissions or conflicts in the dimensions, conditions and specifications appearing on these plans.

designers group
residential·commercial·architecture

40-2922

LARGO (WS)
Lot # - Subdivision
Street Address
City, State. Zip

A division of Park Square Enterprises Inc.
5200 Vineland Rd. Suite #200
Orlando, Fl. 32811
Phone: (407) 529-3000

ISSUE DATE	08/27/2020
REVISIONS	
PROJECT:	00-0000
SCALE:	AS NOTED
DRAWN BY:	S.B.
DESIGNED BY:	MJS

COVER PAGE
00

© COPYRIGHT 2016 PARK SQUARE HOMES HEREBY RESERVES ITS COMMON LAW COPYRIGHTS IN THESE PLANS, IDEAS AND DESIGNS. THESE PLANS, IDEAS AND DESIGNS ARE NOT TO BE COPIED OR MODIFIED IN ANY MATTER OR FORM WHATSOEVER, NOR ARE THEY TO BE ASSIGNED TO ANY THIRD PARTY WITHOUT FIRST OBTAINING THE EXPRESS WRITTEN PERMISSION FROM PARK SQUARE HOMES.

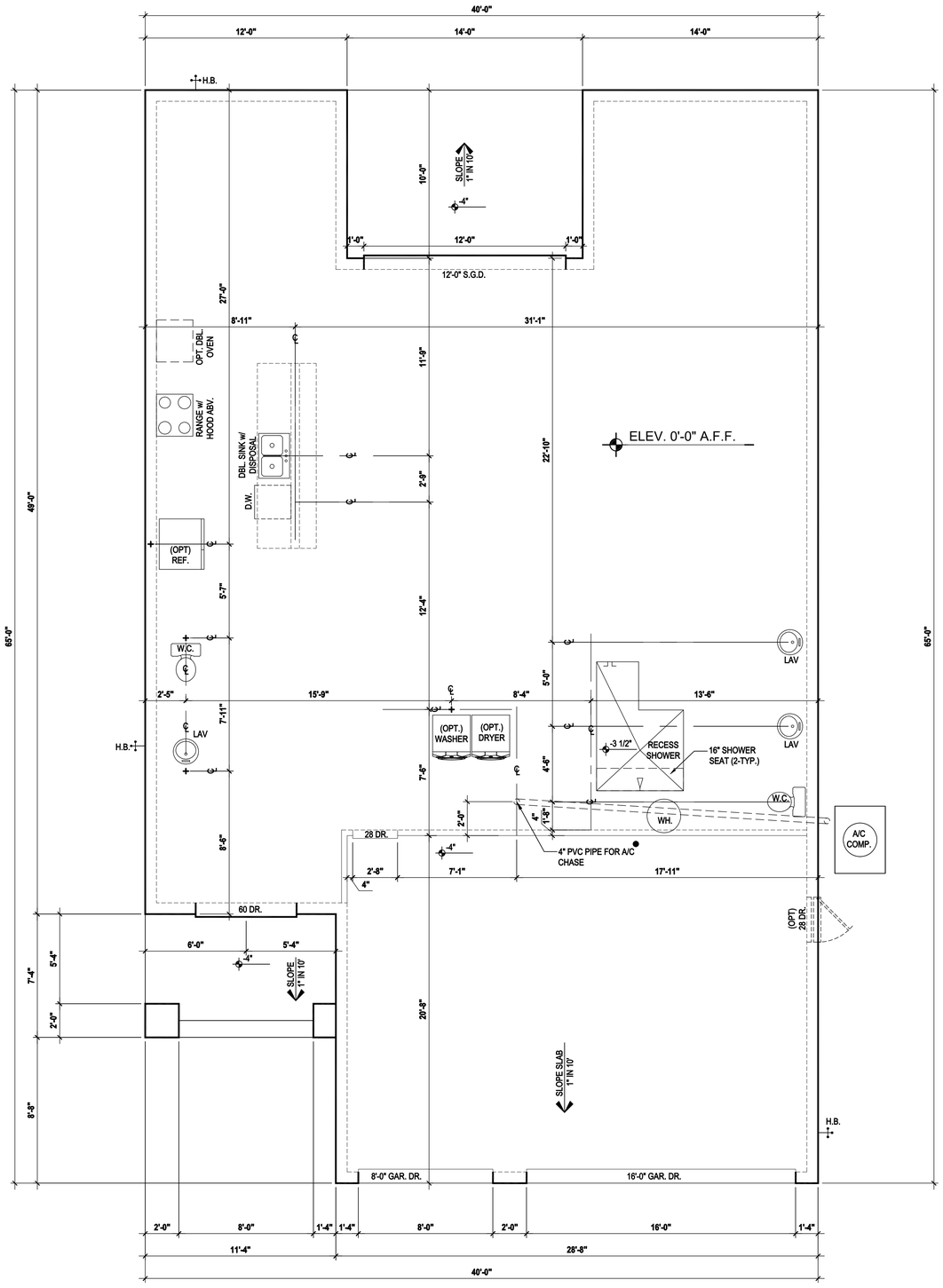

Slab Plan "A,B,C"

SCALE: 1/8" = 1'-0" (11x17) 1/4" = 1'-0" (22x34)

GENERAL NOTES KEY:

1. CONTRACTOR TO VERIFY ALL DIMENSIONS ON JOB SITE.
2. DO NOT SCALE PRINTS. CONSTRUCTION TO BE FROM CALCULATED DIMENSIONS ONLY. ANY DISCREPANCIES OR ERRORS TO BE REPORTED PROMPTLY TO SUPERVISOR FOR CLARIFICATION.
3. WATER HEATER T & P RELIEF VALVE SHALL BE FULL SIZE TO EXTERIOR WATER HEATED AT OR ABOVE FLOOR LEVEL SHALL BE IN A PAN WITH DRAIN TO EXTERIOR. WATER HEATER SHALL HAVE AN APPROVED THERMAL EXPANSION DEVICE.
4. PAVERS MAY BE USED ILO CONCRETE SLAB AT PATIO, PORCH, DRIVE AND WALKWAY.
5. IN LEIU OF TREATING THE SOIL AN ALTERNATIVE TO TERMITE TREATED SOIL CAN BE TERMICIDE.
6. BORA-CARE TO BE APPLIED ON INTERIOR WALLS IAW MANUFACTURERS INSTRUCTIONS AND SPECIFICATIONS. PURSUANT TO CH.482 OF THE FLORIDA BUILDING CODE.

DOOR NOTE KEY:

DOOR SIZE CALLOUT:

20 = 2'-0"	40 B.F. = 4'-0" BIFOLD
24 = 2'-4"	50 B.F. = 5'-0" BIFOLD
26 = 2'-6"	60 B.F. = 6'-0" BIFOLD
28 = 2'-8"	
30 = 3'-0"	

** ALL INT. DOORS TO BE 6'-8" TALL U.N.O. OR PER BUILDER/CLIENT*

THOMPSON ENGINEERING GROUP, INC.
4401 Vineland Road Suite A6 Orlando, FL 32811
Ph: (407) 734-1450
Fax: (407) 734-1790
www.tegfl.com

MJS designers group
residential-commercial-architecture
815 Orienta Ave. Suite# 1040
Altamonte Springs, FL. 32701
Ph: (407) 629-6711
Fax: (407) 629-6776
www.mjshomedesigns.com

WRITTEN DIMENSIONS SHALL HAVE PRECEDENCE OVER SCALE DIMENSIONS.
Contractors shall verify and be responsible for all dimensions and conditions of the job and M.J.S., Inc. must be notified in writing of any changes in the dimensions, conditions and specifications appearing on these plans.

40-2922

LARGO (WS)
Lot # - Subdivision
Street Address
City, State. Zip

Park Square HOMES
A division of Park Square Enterprises Inc.
5200 Vineland Rd. Suite #200
Orlando, Fl. 32811
Phone: (407) 529-3000

ISSUE DATE	08/27/2020
REVISIONS	
PROJECT:	00-0000
SCALE:	AS NOTED
DRAWN BY:	S.B.
DESIGNED BY:	MJS

FLOOR PLAN
01.A

© COPYRIGHT 2016 PARK SQUARE HOMES, HEREBY RESERVES ITS COMMON LAW COPYRIGHTS IN THESE PLANS, IDEAS AND DESIGN. THESE PLANS, IDEAS AND DESIGNS ARE NOT TO BE COPIED OR MODIFIED IN ANY MATTER OR FORM WHATSOEVER, NOR ARE THEY TO BE ASSIGNED TO ANY THIRD PARTY WITHOUT FIRST OBTAINING THE EXPRESS WRITTEN PERMISSION FROM PARK SQUARE HOMES.

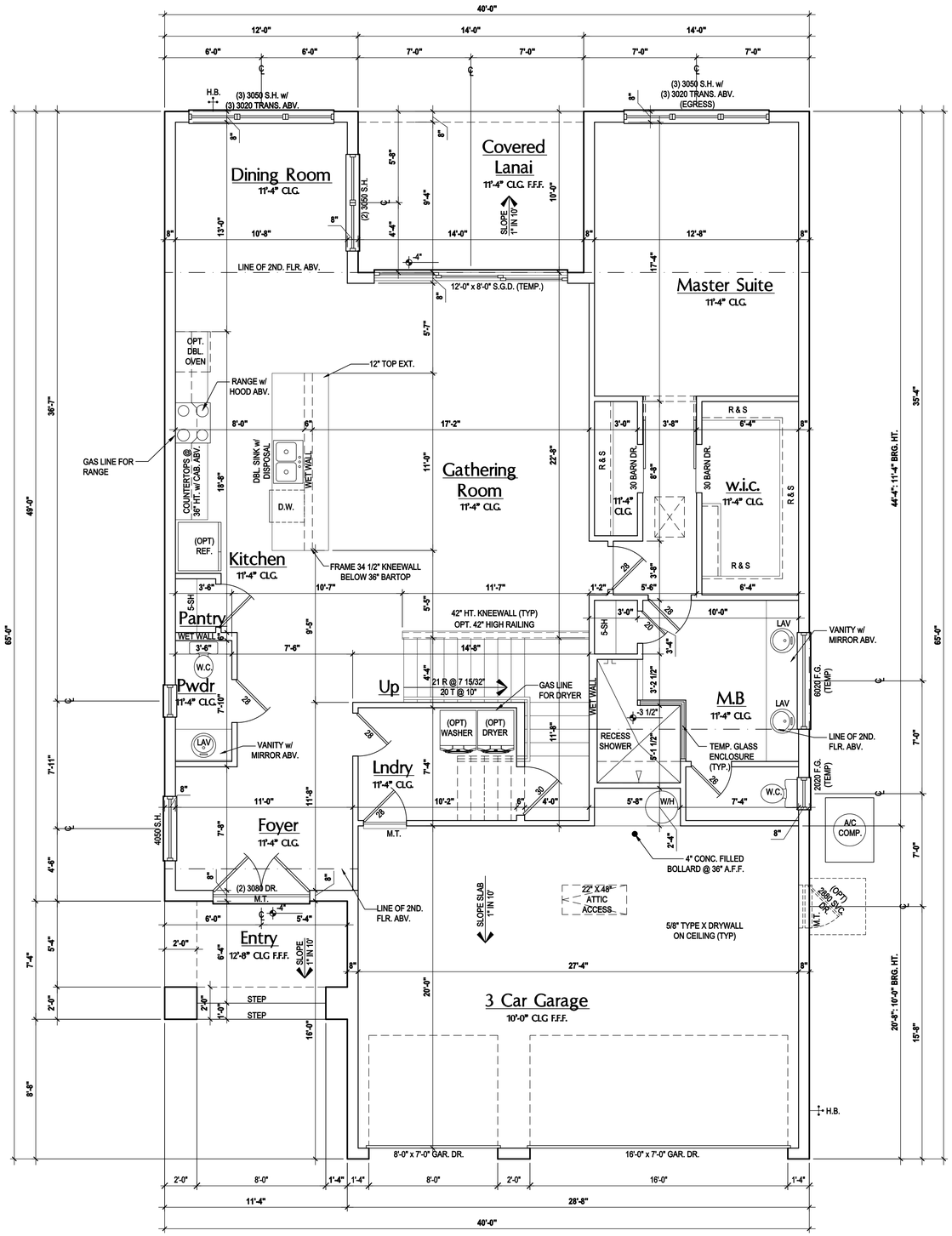

First Floor Plan "A"

SCALE: 1/8" = 1'-0" (11x17) 1/4" = 1'-0" (22x34)

GENERAL NOTES KEY:

THIS STRUCTURE HAS BEEN DESIGNED TO MEET OR EXCEED REQUIREMENTS OF THE (2017) FLORIDA BUILDING CODE (6TH EDITION)

ABBREVIATIONS:

- 2- # OF DOORS.
- 2- # OF WINDOWS.
- MT - METAL THRESHOLD
- FR - FRENCH DOORS
- SL - SIDE LIGHT
- FG - FIXED GLASS
- TR - TRANSOM
- GB - GLASS BLOCK
- PKT - POCKET DOOR
- OBS - OBSCURED GLASS
- TEMP - TEMPERED GLASS
- SH - SINGLE HUNG
- DH - DOUBLE HUNG
- HR - HORIZONTAL ROLLER
- BP - BYPASS
- BF - BIFOLD
- TYP. - TYPICAL

NOTE:
SPECIALTY WINDOWS/DOORS, FIXED GLASS WINDOWS, AND TRANSOMS ARE NOTED ON PLANS.

NOTES:

1. CONTRACTOR TO VERIFY ALL DIMENSIONS ON JOB SITE.
2. DO NOT SCALE PRINTS! CONSTRUCTION TO BE FROM CALCULATED DIMENSIONS ONLY. ANY DISCREPANCIES OR ERRORS TO BE REPORTED PROMPTLY TO SUPERVISOR FOR CLARIFICATION.
3. MECHANICAL EQUIP. LOCATIONS WILL BE DETERMINED BY COMMUNITY AND COUNTY CODES.
4. A/C CONDENSER UNIT TO BE ANCHORED TO SLAB PER CODE M307.2 & M1309.3.
5. PROVIDE RECESS H&C WATER w/ DRAIN @ WASHER SPACE.
6. VENT DRYER THRU EXTERIOR WALL U.N.O.
7. PROVIDE COLD WATER LINE FOR ICE MAKER LINE @ REF. SPACE.
8. SAG RESISTANT DRYWALL ON ALL CEILINGS.
9. PULL ALL DIMENSIONS FROM THE REAR OF PLAN.
10. REFER TO EXTERIOR ELEVATIONS & TYP. DETAIL SHEETS FOR EXTERIOR WALL FINISH SPEC'S.
11. REFER TO DETAIL SHEETS FOR FLASHING REQUIREMENTS AT ALL WOOD TO MASONRY INTERFACES.
12. ALL INTERIOR FRAME WALL DIMENSIONS TO BE 3 $\frac{1}{2}$" U.N.O.
13. ALL EXTERIOR BLOCK WALL DIMENSIONS TO BE 7 $\frac{3}{4}$" U.N.O.
14. ALL INT. FIRST FLOOR CEILINGS AT 9'-4" U.N.O.
    ** ALL INT. SECOND FLOOR CEILINGS AT 9'-0" U.N.O.
15. C.M.U. & FRAME WALL SYSTEM SEGMENTS WHICH HAVE AN UNINTERRUPTED LENGTH OF 12'-0" OR MORE SHALL BE CONSIDERED SHEAR WALL SWS = SHEAR WALL SEGMENTS.
16. OPENING BETWEEN GARAGE AND RESIDENCE SHALL BE EQUIPPED w/ A 20 MIN. FIRE RATED SOLID WOOD OR HONEYCOMB CORE STEEL DOOR NOT LESS THAN 1 3/8" THICKNESS AS PER FBC-R302.5.1.
17. INSTALL 5/8" TYPE X DRYWALL ON GARAGE CEILING BENEATH HABITABLE ROOMS (TYP.)
18. *GARAGE DOOR TO BE CERTIFIED BY MFR. FOR 140 M.P.H.*
19. *ALL TUB & SHOWER UNITS WILL HAVE ANTI-SCALDING DEVICES INSTALLED.*
20. ALL OPERABLE WINDOWS LOCATED MORE THAN 72" ABV. SURFACE BELOW SHALL HAVE THE LOWEST PORTION OF WINDOW CLEAR OPENING A MIN. OF 24" ABOVE FINISHED FLOOR BEING SERVER PER (FBC-R312.2).
21. *ALL INT. DOORS TO BE 6'-8" TALL U.N.O. OR PER BUILDER / CLIENT*
22. 1/2" GYPSUM BOARD APPLIED TO THE GARAGE SIDE OF WALL TO UNDERSIDE OF DECKING
23. ALL WINDOW AND DOOR ROUGH OPENINGS VARY PER MANUFACTURER'S SPECIFICATIONS, AND ARE NOT REFLECTED ON THE PLANS. DIMENSIONS PROVIDED ON PLANS ARE USED FOR AN APPROXIMATE LOCATION OF WINDOWS & DOORS, AND DO NOT REFLECT THE ROUGH OPENINGS REQUIRED FOR PROPER INSTALLATION. BUILDER WILL BE REQUIRED TO CROSS-REFERENCE ROUGH OPENINGS AND PLAN DIMENSIONS.
24. SOIL TESTING IS RECOMMENDED, BUT IS NOT REQUIRED. THE DESIGN TEAM AT MJS & E.O.R STRONGLY RECOMMEND A SOIL TEST TO CONFIRM SOIL BEARING CAPACITY AND SURFACE GEO-TECHNICAL CONDITIONS. FOOTINGS SHALL BEAR ON UNDISTURBED SOIL A/O PROPERLY COMPACTED FILL (2000 PSF MIN.). FILL MATERIAL SHALL BE COMPACTED TO 95% DENSITY OF A STANDARD PROCTOR. TO BE VERIFIED BY GENERAL CONTRACTOR / OWNER.

DOOR NOTE KEY:

DOOR SIZE CALLOUT:

20 = 2'-0"	40 B.F. = 4'-0" BIFOLD
24 = 2'-4"	50 B.F. = 5'-0" BIFOLD
26 = 2'-6"	60 B.F. = 6'-0" BIFOLD
28 = 2'-8"	
30 = 3'-0"	

WINDOW NOTE KEY:

WINDOW SIZE CALLOUT:
2040 = 2'-0" x 4'-0"
2050 = 2'-0" x 5'-0"
2060 = 2'-0" x 6'-0"

- ALL WINDOW CALLOUTS ARE MEASURED IN FEET & INCHES AS PER THE EXAMPLE TABLE ABOVE.

Area Tabulations

Living:		
	1st floor:	1,689 sf
	2nd floor:	1,233 sf
Total Living:		2,922 sf
	Entry:	83 sf
	Cov. Patio:	140 sf
	Garage:	589 sf
Total Area:		3,734 sf

THOMPSON ENGINEERING GROUP, INC.
4401 Vineland Road Suite A6 Orlando, FL 32811
Ph: (407)734-1450
Fax: (407) 734-1790
www.tegfl.com

MJS designers group
residential-commercial-architecture
815 Orienta Ave. Suite# 1040
Altamonte Springs, FL. 32701
Ph: (407) 629-6711
Fax: (407) 629-6776
www.mjshomedesigns.com

WRITTEN DIMENSIONS SHALL HAVE PRECEDENCE OVER SCALE DIMENSIONS.
Contractors shall verify and be responsible for all dimensions and conditions of the job and M.J.S., Inc. must be notified in writing of any changes in the dimensions, conditions and specifications appearing on these plans.

40-2922

LARGO (WS)
Lot # - Subdivision
Street Address
City, State. Zip

A division of Park Square Enterprises Inc.
5200 Vineland Rd. Suite #200
Orlando, Fl. 32811
Phone: (407) 529-3000
Park Square HOMES

ISSUE DATE	08/27/2020
REVISIONS	
PROJECT:	00-0000
SCALE:	AS NOTED
DRAWN BY:	S.B.
DESIGNED BY:	MJS

FLOOR PLAN
A2.A

© COPYRIGHT 2016 PARK SQUARE HOMES HEREBY RESERVES ITS COMMON LAW COPYRIGHTS IN THESE PLANS, IDEAS AND DESIGNS. THESE PLANS, IDEAS AND DESIGNS ARE NOT TO BE COPIED OR MODIFIED IN ANY MATTER OR FORM WHATSOEVER, NOR ARE THEY TO BE ASSIGNED TO ANY THIRD PARTY WITHOUT FIRST OBTAINING THE EXPRESS WRITTEN PERMISSION FROM PARK SQUARE HOMES.

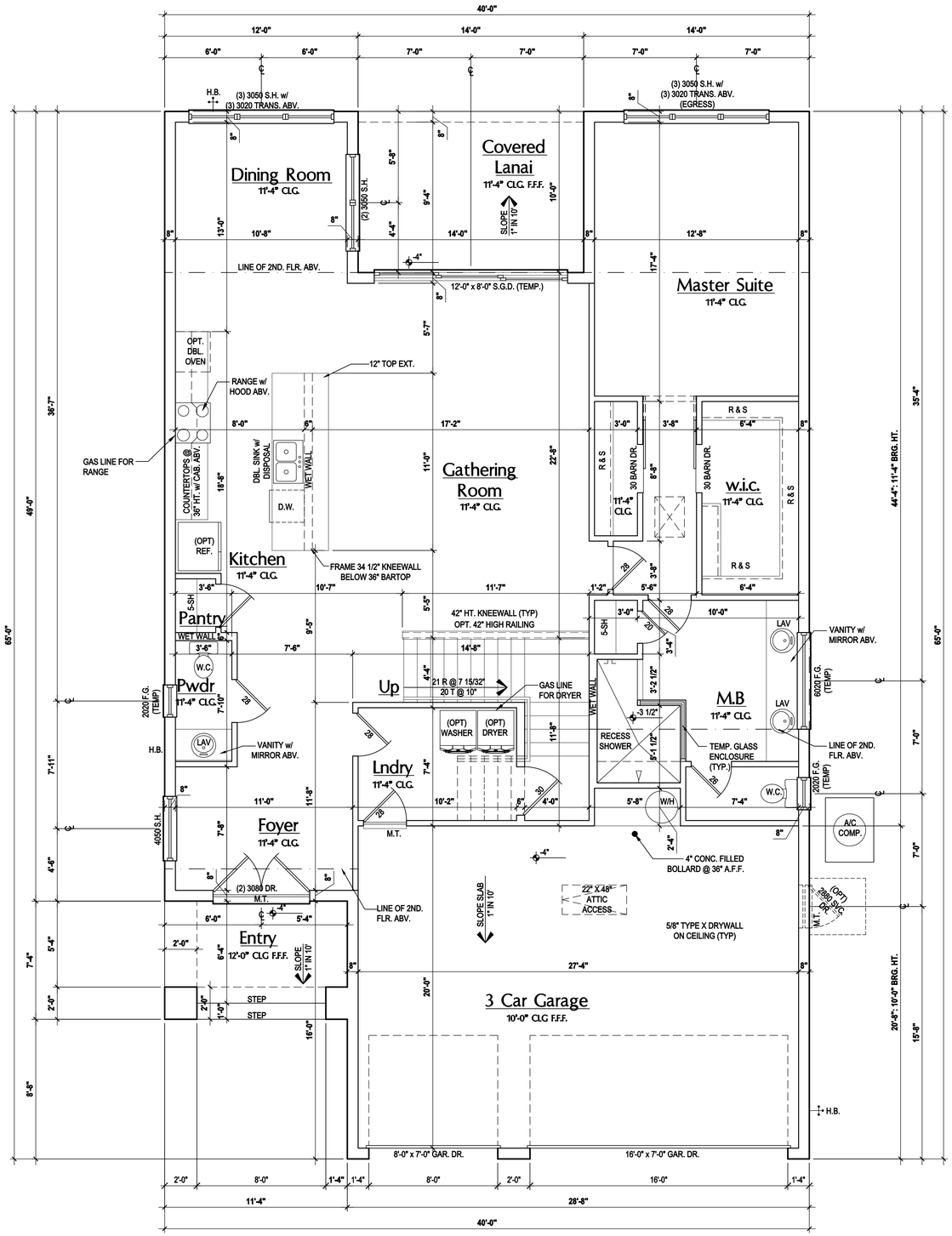

First Floor Plan "B"

(Standard)

SCALE: 1/8" = 1'-0" (11x17) 1/4" = 1'-0" (22x34)

GENERAL NOTES KEY:

THIS STRUCTURE HAS BEEN DESIGNED TO MEET OR EXCEED REQUIREMENTS OF THE (2017) FLORIDA BUILDING CODE (6TH EDITION)

ABBREVIATIONS:

- 2- # OF DOORS.
- 2- # OF WINDOWS.
- MT - METAL THRESHOLD
- FR - FRENCH DOORS
- SL - SIDE LIGHT
- FG - FIXED GLASS
- TR - TRANSOM
- GB - GLASS BLOCK
- PKT - POCKET DOOR
- OBS - OBSCURED GLASS
- TEMP - TEMPERED GLASS
- SH - SINGLE HUNG
- DH - DOUBLE HUNG
- HR - HORIZONTAL ROLLER
- BP - BYPASS
- BF - BIFOLD
- TYP. - TYPICAL

NOTE:
SPECIALTY WINDOWS/DOORS, FIXED GLASS WINDOWS, AND TRANSOMS ARE NOTED ON PLANS.

NOTES:

1. CONTRACTOR TO VERIFY ALL DIMENSIONS ON JOB SITE.
2. DO NOT SCALE PRINTS! CONSTRUCTION TO BE FROM CALCULATED DIMENSIONS ONLY. ANY DISCREPANCIES OR ERRORS TO BE REPORTED PROMPTLY TO SUPERVISOR FOR CLARIFICATION.
3. MECHANICAL EQUIP. LOCATIONS WILL BE DETERMINED BY COMMUNITY AND COUNTY CODES.
4. A/C CONDENSER UNIT TO BE ANCHORED TO SLAB PER CODE M307.2 & M1309.3.
5. PROVIDE RECESS H&C WATER w/ DRAIN @ WASHER SPACE.
6. VENT DRYER THRU EXTERIOR WALL U.N.O.
7. PROVIDE COLD WATER LINE FOR ICE MAKER LINE @ REF. SPACE.
8. SAG RESISTANT DRYWALL ON ALL CEILINGS.
9. PULL ALL DIMENSIONS FROM THE REAR OF PLAN.
10. REFER TO EXTERIOR ELEVATIONS & TYP. DETAIL SHEETS FOR EXTERIOR WALL FINISH SPEC'S.
11. REFER TO DETAIL SHEETS FOR FLASHING REQUIREMENTS AT ALL WOOD TO MASONRY INTERFACES.
12. ALL INTERIOR FRAME WALL DIMENSIONS TO BE 3 $\frac{1}{2}$" U.N.O.
13. ALL EXTERIOR BLOCK WALL DIMENSIONS TO BE 7 $\frac{3}{4}$" U.N.O.
14. ALL INT. FIRST FLOOR CEILINGS AT 9'-4" U.N.O.
    ** ALL INT. SECOND FLOOR CEILINGS AT 9'-0" U.N.O.
15. C.M.U. & FRAME WALL SYSTEM SEGMENTS WHICH HAVE AN UNINTERRUPTED LENGTH OF 12'-0" OR MORE SHALL BE CONSIDERED SHEAR WALL SWS = SHEAR WALL SEGMENTS.
16. OPENING BETWEEN GARAGE AND RESIDENCE SHALL BE EQUIPPED w/ A 20 MIN. FIRE RATED SOLID WOOD OR HONEYCOMB CORE STEEL DOOR NOT LESS THAN 1 3/8" THICKNESS AS PER FBC-R302.5.1.
17. INSTALL 5/8" TYPE X DRYWALL ON GARAGE CEILING BENEATH HABITABLE ROOMS (TYP.)
18. *GARAGE DOOR TO BE CERTIFIED BY MFR. FOR 140 M.P.H.*
19. *ALL TUB & SHOWER UNITS WILL HAVE ANTI-SCALDING DEVICES INSTALLED.*
20. ALL OPERABLE WINDOWS LOCATED MORE THAN 72" ABV. SURFACE BELOW SHALL HAVE THE LOWEST PORTION OF WINDOW CLEAR OPENING A MIN. OF 24" ABOVE FINISHED FLOOR BEING SERVER PER (FBC-R312.2).
21. *ALL INT. DOORS TO BE 6'-8" TALL U.N.O. OR PER BUILDER / CLIENT*
22. 1/2" GYPSUM BOARD APPLIED TO THE GARAGE SIDE OF WALL TO UNDERSIDE OF DECKING
23. ALL WINDOW AND DOOR ROUGH OPENINGS VARY PER MANUFACTURER'S SPECIFICATIONS, AND ARE NOT REFLECTED ON THE PLANS. DIMENSIONS PROVIDED ON PLANS ARE USED FOR AN APPROXIMATE LOCATION OF WINDOWS & DOORS, AND DO NOT REFLECT THE ROUGH OPENINGS REQUIRED FOR PROPER INSTALLATION. BUILDER WILL BE REQUIRED TO CROSS-REFERENCE ROUGH OPENINGS AND PLAN DIMENSIONS.
24. SOIL TESTING IS RECOMMENDED, BUT IS NOT REQUIRED. THE DESIGN TEAM AT MJS & E.O.R STRONGLY RECOMMEND A SOIL TEST TO CONFIRM SOIL BEARING CAPACITY AND SURFACE GEO-TECHNICAL CONDITIONS. FOOTINGS SHALL BEAR ON UNDISTURBED SOIL A/O PROPERLY COMPACTED FILL (2000 PSF MIN.). FILL MATERIAL SHALL BE COMPACTED TO 95% DENSITY OF A STANDARD PROCTOR. TO BE VERIFIED BY GENERAL CONTRACTOR / OWNER.

DOOR NOTE KEY:

DOOR SIZE CALLOUT:

20 = 2'-0"	40 B.F. = 4'-0" BIFOLD
24 = 2'-4"	50 B.F. = 5'-0" BIFOLD
26 = 2'-6"	60 B.F. = 6'-0" BIFOLD
28 = 2'-8"	
30 = 3'-0"	

WINDOW NOTE KEY:

WINDOW SIZE CALLOUT:
2040 = 2'-0" x 4'-0"
2050 = 2'-0" x 5'-0"
2060 = 2'-0" x 6'-0"

- ALL WINDOW CALLOUTS ARE MEASURED IN FEET & INCHES AS PER THE EXAMPLE TABLE ABOVE.

Area Tabulations

Living:		
	1st floor:	1,689 sf
	2nd floor:	1,233 sf
Total Living:		2,922 sf
	Entry:	83 sf
	Cov. Patio:	140 sf
	Garage:	589 sf
Total Area:		3,734 sf

THOMPSON ENGINEERING GROUP, INC.
4401 Vineland Road Suite A6 Orlando, FL 32811
Ph: (407)734-1450
Fax: (407) 734-1790
www.tegfl.com

815 Orienta Ave. Suite# 1040
Altamonte Springs, FL. 32701
Ph: (407) 629-6711
Fax: (407) 629-6776
www.mjshomedesigns.com

MJS designers group
residential-commercial-architecture

WRITTEN DIMENSIONS SHALL HAVE PRECEDENCE OVER SCALE DIMENSIONS.
Contractors shall verify and be responsible for all dimensions and conditions of the job and MJS, Inc. must be notified in writing of any changes in the dimensions, conditions and specifications appearing on these plans.

40-2922

LARGO (WS)
Lot # - Subdivision
Street Address
City, State. Zip

A division of Park Square Enterprises Inc.
5200 Vineland Rd. Suite #200
Orlando, Fl. 32811
Phone: (407) 529-3000

Park Square HOMES

ISSUE DATE	08/27/2020
REVISIONS	
PROJECT:	00-0000
SCALE:	AS NOTED
DRAWN BY:	S.B.
DESIGNED BY:	MJS

FLOOR PLAN
A2.B

© COPYRIGHT 2016 - PARK SQUARE HOMES HEREBY RESERVES ITS COMMON LAW COPYRIGHTS IN THESE PLANS, IDEAS AND DESIGNS. THESE PLANS, IDEAS AND DESIGNS ARE NOT TO BE COPIED OR MODIFIED IN ANY MATTER OR FORM WHATSOEVER, NOR ARE THEY TO BE ASSIGNED TO ANY THIRD PARTY WITHOUT FIRST OBTAINING THE EXPRESS WRITTEN PERMISSION FROM PARK SQUARE HOMES.

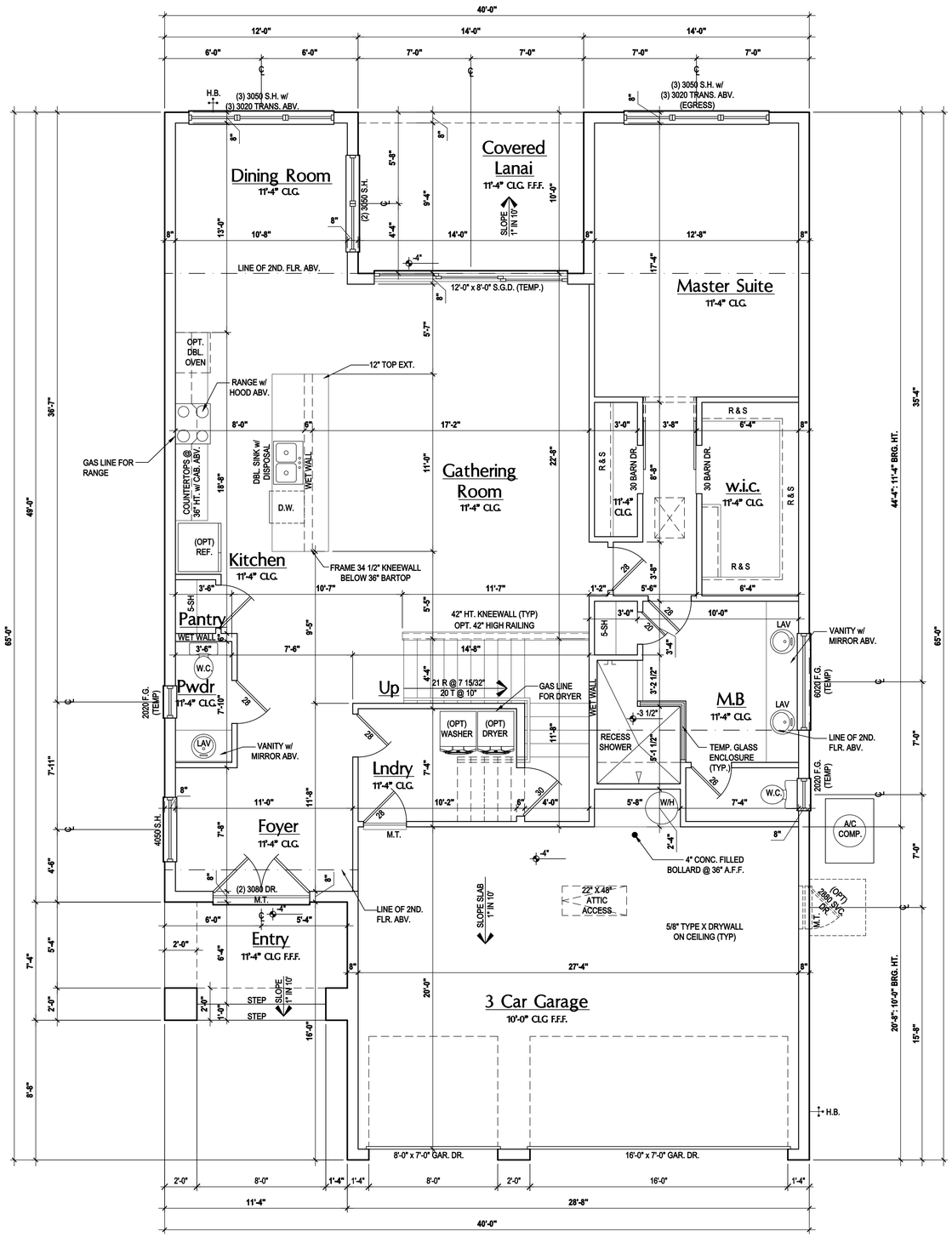

First Floor Plan "C"

(Standard)

SCALE: 1/8" = 1'-0" (11x17) 1/4" = 1'-0" (22x34)

GENERAL NOTES KEY:

THIS STRUCTURE HAS BEEN DESIGNED TO MEET OR EXCEED REQUIREMENTS OF THE (2017) FLORIDA BUILDING CODE (6TH EDITION)

ABBREVIATIONS:

- 2- # OF DOORS.
- 2- # OF WINDOWS.
- MT - METAL THRESHOLD
- FR - FRENCH DOORS
- SL - SIDE LIGHT
- FG - FIXED GLASS
- TR - TRANSOM
- GB - GLASS BLOCK
- PKT - POCKET DOOR
- OBS - OBSCURED GLASS
- TEMP - TEMPERED GLASS
- SH - SINGLE HUNG
- DH - DOUBLE HUNG
- HR - HORIZONTAL ROLLER
- BP - BYPASS
- BF - BIFOLD
- TYP. - TYPICAL

NOTE:
SPECIALTY WINDOWS/DOORS, FIXED GLASS WINDOWS, AND TRANSOMS ARE NOTED ON PLANS.

NOTES:

1. CONTRACTOR TO VERIFY ALL DIMENSIONS ON JOB SITE.
2. DO NOT SCALE PRINTS! CONSTRUCTION TO BE FROM CALCULATED DIMENSIONS ONLY. ANY DISCREPANCIES OR ERRORS TO BE REPORTED PROMPTLY TO SUPERVISOR FOR CLARIFICATION.
3. MECHANICAL EQUIP. LOCATIONS WILL BE DETERMINED BY COMMUNITY AND COUNTY CODES.
4. A/C CONDENSER UNIT TO BE ANCHORED TO SLAB PER CODE M307.2 & M1309.3.
5. PROVIDE RECESS H&C WATER w/ DRAIN @ WASHER SPACE.
6. VENT DRYER THRU EXTERIOR WALL U.N.O.
7. PROVIDE COLD WATER LINE FOR ICE MAKER LINE @ REF. SPACE.
8. SAG RESISTANT DRYWALL ON ALL CEILINGS.
9. PULL ALL DIMENSIONS FROM THE REAR OF PLAN.
10. REFER TO EXTERIOR ELEVATIONS & TYP. DETAIL SHEETS FOR EXTERIOR WALL FINISH SPEC'S.
11. REFER TO DETAIL SHEETS FOR FLASHING REQUIREMENTS AT ALL WOOD TO MASONRY INTERFACES.
12. ALL INTERIOR FRAME WALL DIMENSIONS TO BE 3 $\frac{1}{2}$" U.N.O.
13. ALL EXTERIOR BLOCK WALL DIMENSIONS TO BE 7 $\frac{3}{4}$" U.N.O.
14. ALL INT. FIRST FLOOR CEILINGS AT 9'-4" U.N.O.
    ** ALL INT. SECOND FLOOR CEILINGS AT 9'-0" U.N.O.
15. C.M.U. & FRAME WALL SYSTEM SEGMENTS WHICH HAVE AN UNINTERRUPTED LENGTH OF 12'-0" OR MORE SHALL BE CONSIDERED SHEAR WALL SWS = SHEAR WALL SEGMENTS.
16. OPENING BETWEEN GARAGE AND RESIDENCE SHALL BE EQUIPPED w/ A 20 MIN. FIRE RATED SOLID WOOD OR HONEYCOMB CORE STEEL DOOR NOT LESS THAN 1 3/8" THICKNESS AS PER FBC-R302.5.1.
17. INSTALL 5/8" TYPE X DRYWALL ON GARAGE CEILING BENEATH HABITABLE ROOMS (TYP.)
18. *GARAGE DOOR TO BE CERTIFIED BY MFR. FOR 140 M.P.H.*
19. *ALL TUB & SHOWER UNITS WILL HAVE ANTI-SCALDING DEVICES INSTALLED.*
20. ALL OPERABLE WINDOWS LOCATED MORE THAN 72" ABV. SURFACE BELOW SHALL HAVE THE LOWEST PORTION OF WINDOW CLEAR OPENING A MIN. OF 24" ABOVE FINISHED FLOOR BEING SERVER PER (FBC-R312.2).
21. *ALL INT. DOORS TO BE 6'-8" TALL U.N.O. OR PER BUILDER / CLIENT*
22. 1/2" GYPSUM BOARD APPLIED TO THE GARAGE SIDE OF WALL TO UNDERSIDE OF DECKING
23. ALL WINDOW AND DOOR ROUGH OPENINGS VARY PER MANUFACTURER'S SPECIFICATIONS, AND ARE NOT REFLECTED ON THE PLANS. DIMENSIONS PROVIDED ON PLANS ARE USED FOR AN APPROXIMATE LOCATION OF WINDOWS & DOORS, AND DO NOT REFLECT THE ROUGH OPENINGS REQUIRED FOR PROPER INSTALLATION. BUILDER WILL BE REQUIRED TO CROSS-REFERENCE ROUGH OPENINGS AND PLAN DIMENSIONS.
24. SOIL TESTING IS RECOMMENDED, BUT IS NOT REQUIRED. THE DESIGN TEAM AT MJS & E.O.R STRONGLY RECOMMEND A SOIL TEST TO CONFIRM SOIL BEARING CAPACITY AND SURFACE GEO-TECHNICAL CONDITIONS. FOOTINGS SHALL BEAR ON UNDISTURBED SOIL A/O PROPERLY COMPACTED FILL (2000 PSF MIN.). FILL MATERIAL SHALL BE COMPACTED TO 95% DENSITY OF A STANDARD PROCTOR. TO BE VERIFIED BY GENERAL CONTRACTOR / OWNER.

DOOR NOTE KEY:

DOOR SIZE CALLOUT:

20 = 2'-0"	40 B.F. = 4'-0" BIFOLD
24 = 2'-4"	50 B.F. = 5'-0" BIFOLD
26 = 2'-6"	60 B.F. = 6'-0" BIFOLD
28 = 2'-8"	
30 = 3'-0"	

WINDOW NOTE KEY:

WINDOW SIZE CALLOUT:
2040 = 2'-0" x 4'-0"
2050 = 2'-0" x 5'-0"
2060 = 2'-0" x 6'-0"

- ALL WINDOW CALLOUTS ARE MEASURED IN FEET & INCHES AS PER THE EXAMPLE TABLE ABOVE.

Area Tabulations

Living:		
	1st floor:	1,689 sf
	2nd floor:	1,233 sf
Total Living:		2,922 sf
	Entry:	83 sf
	Cov. Patio:	140 sf
	Garage:	589 sf
Total Area:		3,734 sf

THOMPSON ENGINEERING GROUP, INC.
4401 Vineland Road Suite A6 Orlando, FL 32811
Ph: (407)734-1450
Fax: (407) 734-1790
www.tegfl.com

MJS designers group
residential-commercial-architecture
815 Orienta Ave. Suite# 1040
Altamonte Springs, FL. 32701
Ph: (407) 629-6711
Fax: (407) 629-6776
www.mjshomedesigns.com

WRITTEN DIMENSIONS SHALL HAVE PRECEDENCE OVER SCALE DIMENSIONS.
Contractors shall verify and be responsible for all dimensions and conditions of the job and M.J.S., Inc. must be notified in writing of any changes in the dimensions, conditions and specifications appearing on these plans.

40-2922

LARGO (WS)
Lot # - Subdivision
Street Address
City, State. Zip

A division of Park Square Enterprises Inc.
5200 Vineland Rd. Suite #200
Orlando, Fl. 32811
Phone: (407) 529-3000
Park Square HOMES

ISSUE DATE	08/27/2020
REVISIONS	
PROJECT:	00-0000
SCALE:	AS NOTED
DRAWN BY:	S.B.
DESIGNED BY:	MJS

FLOOR PLAN
A2.C

© COPYRIGHT 2016 PARK SQUARE HOMES HEREBY RESERVES ITS COMMON LAW COPYRIGHTS IN THESE PLANS, IDEAS AND DESIGNS. THESE PLANS, IDEAS AND DESIGNS ARE NOT TO BE COPIED OR MODIFIED IN ANY MATTER OR FORM WHATSOEVER, NOR ARE THEY TO BE ASSIGNED TO ANY THIRD PARTY WITHOUT FIRST OBTAINING THE EXPRESS WRITTEN PERMISSION FROM PARK SQUARE HOMES.

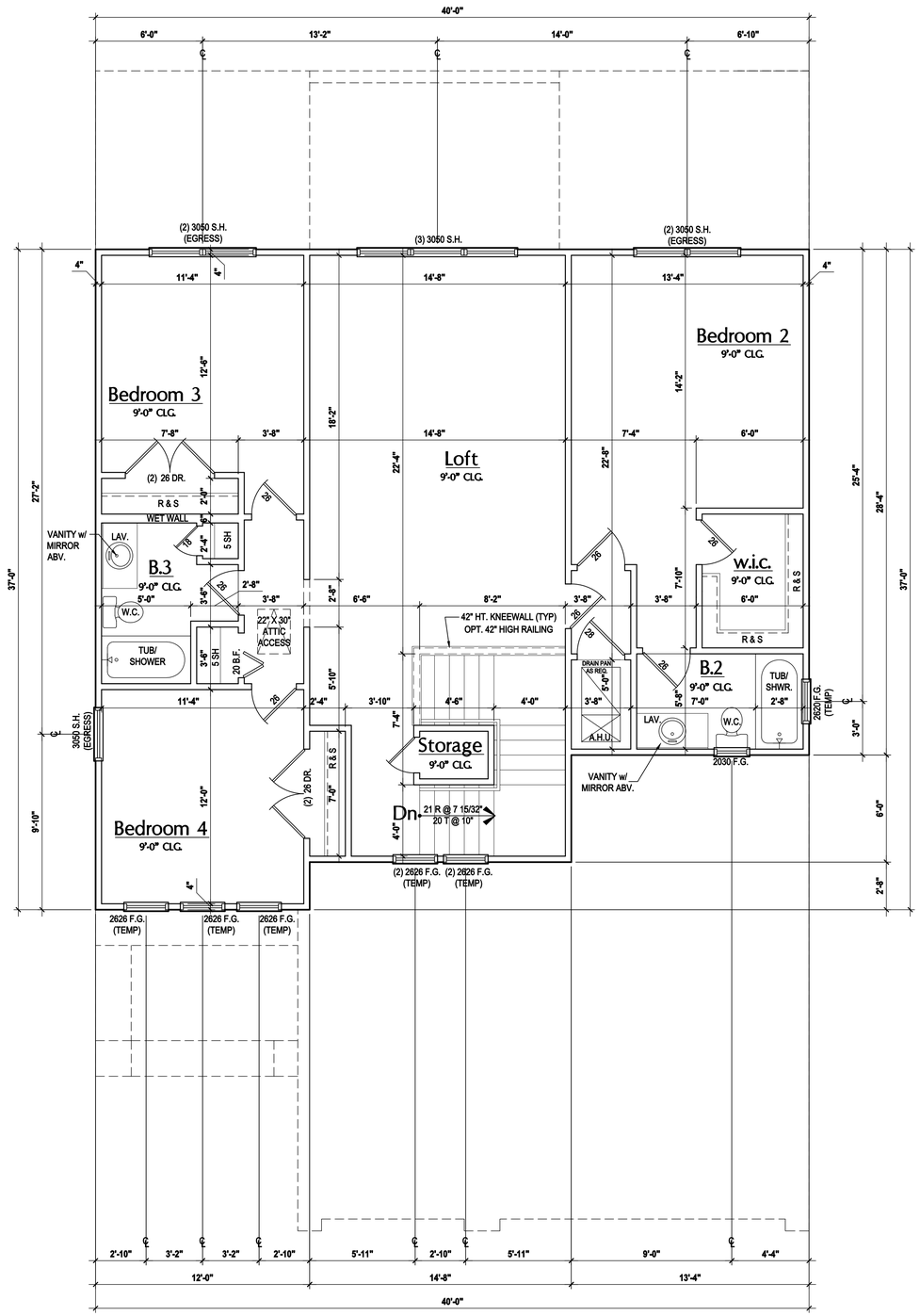

Second Floor Plan "A"

(Standard)

SCALE: 1/8" = 1'-0" (11x17) 1/4" = 1'-0" (22x34)

GENERAL NOTES KEY:

THIS STRUCTURE HAS BEEN DESIGNED TO MEET OR EXCEED REQUIREMENTS OF THE (2017) FLORIDA BUILDING CODE (6TH EDITION)

ABBREVIATIONS:

- 2- # OF DOORS.
- 2- # OF WINDOWS.
- MT - METAL THRESHOLD
- FR - FRENCH DOORS
- SL - SIDE LIGHT
- FG - FIXED GLASS
- TR - TRANSOM
- GB - GLASS BLOCK
- PKT - POCKET DOOR
- OBS - OBSCURED GLASS
- TEMP - TEMPERED GLASS
- SH - SINGLE HUNG
- DH - DOUBLE HUNG
- HR - HORIZONTAL ROLLER
- BP - BYPASS
- BF - BIFOLD
- TYP. - TYPICAL

NOTE:
SPECIALTY WINDOWS/DOORS, FIXED GLASS WINDOWS, AND TRANSOMS ARE NOTED ON PLANS.

NOTES:

1. CONTRACTOR TO VERIFY ALL DIMENSIONS ON JOB SITE.
2. DO NOT SCALE PRINTS! CONSTRUCTION TO BE FROM CALCULATED DIMENSIONS ONLY. ANY DISCREPANCIES OR ERRORS TO BE REPORTED PROMPTLY TO SUPERVISOR FOR CLARIFICATION.
3. MECHANICAL EQUIP. LOCATIONS WILL BE DETERMINED BY COMMUNITY AND COUNTY CODES.
4. A/C CONDENSER UNIT TO BE ANCHORED TO SLAB PER CODE M307.2 & M1309.3.
5. PROVIDE RECESS H&C WATER w/ DRAIN @ WASHER SPACE.
6. VENT DRYER THRU EXTERIOR WALL U.N.O.
7. PROVIDE COLD WATER LINE FOR ICE MAKER LINE @ REF. SPACE.
8. SAG RESISTANT DRYWALL ON ALL CEILINGS.
9. PULL ALL DIMENSIONS FROM THE REAR OF PLAN.
10. REFER TO EXTERIOR ELEVATIONS & TYP. DETAIL SHEETS FOR EXTERIOR WALL FINISH SPEC'S.
11. REFER TO DETAIL SHEETS FOR FLASHING REQUIREMENTS AT ALL WOOD TO MASONRY INTERFACES.
12. ALL INTERIOR FRAME WALL DIMENSIONS TO BE 3 $\frac{1}{2}$" U.N.O.
13. ALL EXTERIOR BLOCK WALL DIMENSIONS TO BE 7 $\frac{3}{4}$" U.N.O.
14. ALL INT. FIRST FLOOR CEILINGS AT 9'-4" U.N.O.
    ** ALL INT. SECOND FLOOR CEILINGS AT 9'-0" U.N.O.
15. C.M.U. & FRAME WALL SYSTEM SEGMENTS WHICH HAVE AN UNINTERRUPTED LENGTH OF 12'-0" OR MORE SHALL BE CONSIDERED SHEAR WALL SWS = SHEAR WALL SEGMENTS.
16. OPENING BETWEEN GARAGE AND RESIDENCE SHALL BE EQUIPPED w/ A 20 MIN. FIRE RATED SOLID WOOD OR HONEYCOMB CORE STEEL DOOR NOT LESS THAN 1 3/8" THICKNESS AS PER FBC-R302.5.1.
17. INSTALL 5/8" TYPE X DRYWALL ON GARAGE CEILING BENEATH HABITABLE ROOMS (TYP.)
18. *GARAGE DOOR TO BE CERTIFIED BY MFR. FOR 140 M.P.H.*
19. *ALL TUB & SHOWER UNITS WILL HAVE ANTI-SCALDING DEVICES INSTALLED.*
20. ALL OPERABLE WINDOWS LOCATED MORE THAN 72" ABV. SURFACE BELOW SHALL HAVE THE LOWEST PORTION OF WINDOW CLEAR OPENING A MIN. OF 24" ABOVE FINISHED FLOOR BEING SERVER PER (FBC-R312.2).
21. *ALL INT. DOORS TO BE 6'-8" TALL U.N.O. OR PER BUILDER / CLIENT*
22. 1/2" GYPSUM BOARD APPLIED TO THE GARAGE SIDE OF WALL TO UNDERSIDE OF DECKING
23. ALL WINDOW AND DOOR ROUGH OPENINGS VARY PER MANUFACTURER'S SPECIFICATIONS, AND ARE NOT REFLECTED ON THE PLANS. DIMENSIONS PROVIDED ON PLANS ARE USED FOR AN APPROXIMATE LOCATION OF WINDOWS & DOORS, AND DO NOT REFLECT THE ROUGH OPENINGS REQUIRED FOR PROPER INSTALLATION. BUILDER WILL BE REQUIRED TO CROSS-REFERENCE ROUGH OPENINGS AND PLAN DIMENSIONS.
24. SOIL TESTING IS RECOMMENDED, BUT IS NOT REQUIRED. THE DESIGN TEAM AT MJS & E.O.R STRONGLY RECOMMEND A SOIL TEST TO CONFIRM SOIL BEARING CAPACITY AND SURFACE GEO-TECHNICAL CONDITIONS. FOOTINGS SHALL BEAR ON UNDISTURBED SOIL A/O PROPERLY COMPACTED FILL. (2000 PSF MIN.). FILL MATERIAL SHALL BE COMPACTED TO 95% DENSITY OF A STANDARD PROCTOR. TO BE VERIFIED BY GENERAL CONTRACTOR / OWNER.

DOOR NOTE KEY:

DOOR SIZE CALLOUT:

20 = 2'-0"	40 B.F. = 4'-0" BIFOLD
24 = 2'-4"	50 B.F. = 5'-0" BIFOLD
26 = 2'-6"	60 B.F. = 6'-0" BIFOLD
28 = 2'-8"	
30 = 3'-0"	

WINDOW NOTE KEY:

WINDOW SIZE CALLOUT:
2040 = 2'-0" x 4'-0"
2050 = 2'-0" x 5'-0"
2060 = 2'-0" x 6'-0"

- ALL WINDOW CALLOUTS ARE MEASURED IN FEET & INCHES AS PER THE EXAMPLE TABLE ABOVE.

THOMPSON ENGINEERING GROUP, INC.
4401 Vineland Road Suite A6 Orlando, FL 32811
Ph: (407) 734-1450
Fax: (407) 734-1790
www.tegfl.com

815 Orienta Ave. Suite# 1040
Altamonte Springs, FL. 32701
Ph: (407) 629-6711
Fax: (407) 629-6776
www.mjshomedesigns.com

WRITTEN DIMENSIONS SHALL HAVE PRECEDENCE OVER SCALE DIMENSIONS.
Contractors shall verify and take responsibility for all dimensions and conditions of the job and M.J.S., Inc. must be notified in writing of any changes in the dimensions, conditions and specifications appearing on these plans.

MJS designers group
residential-commercial-architecture

40-2922

LARGO (WS)
Lot # - Subdivision
Street Address
City, State, Zip

A division of Park Square Enterprises Inc.
5200 Vineland Rd. Suite #200
Orlando, Fl. 32811
Phone: (407) 529-3000

Park Square HOMES

ISSUE DATE	08/27/2020
REVISIONS	
PROJECT:	00-0000
SCALE:	AS NOTED
DRAWN BY:	S.B.
DESIGNED BY:	MJS

FLOOR PLAN
A3.A

© COPYRIGHT 2016 PARK SQUARE HOMES HEREBY RESERVES ITS COMMON LAW COPYRIGHTS IN THESE PLANS, IDEAS AND DESIGNS. THESE PLANS, IDEAS AND DESIGNS ARE NOT TO BE COPIED OR MODIFIED IN ANY MATTER OR FORM WHATSOEVER, NOR ARE THEY TO BE ASSIGNED TO ANY THIRD PARTY WITHOUT FIRST OBTAINING THE EXPRESS WRITTEN PERMISSION FROM PARK SQUARE HOMES.

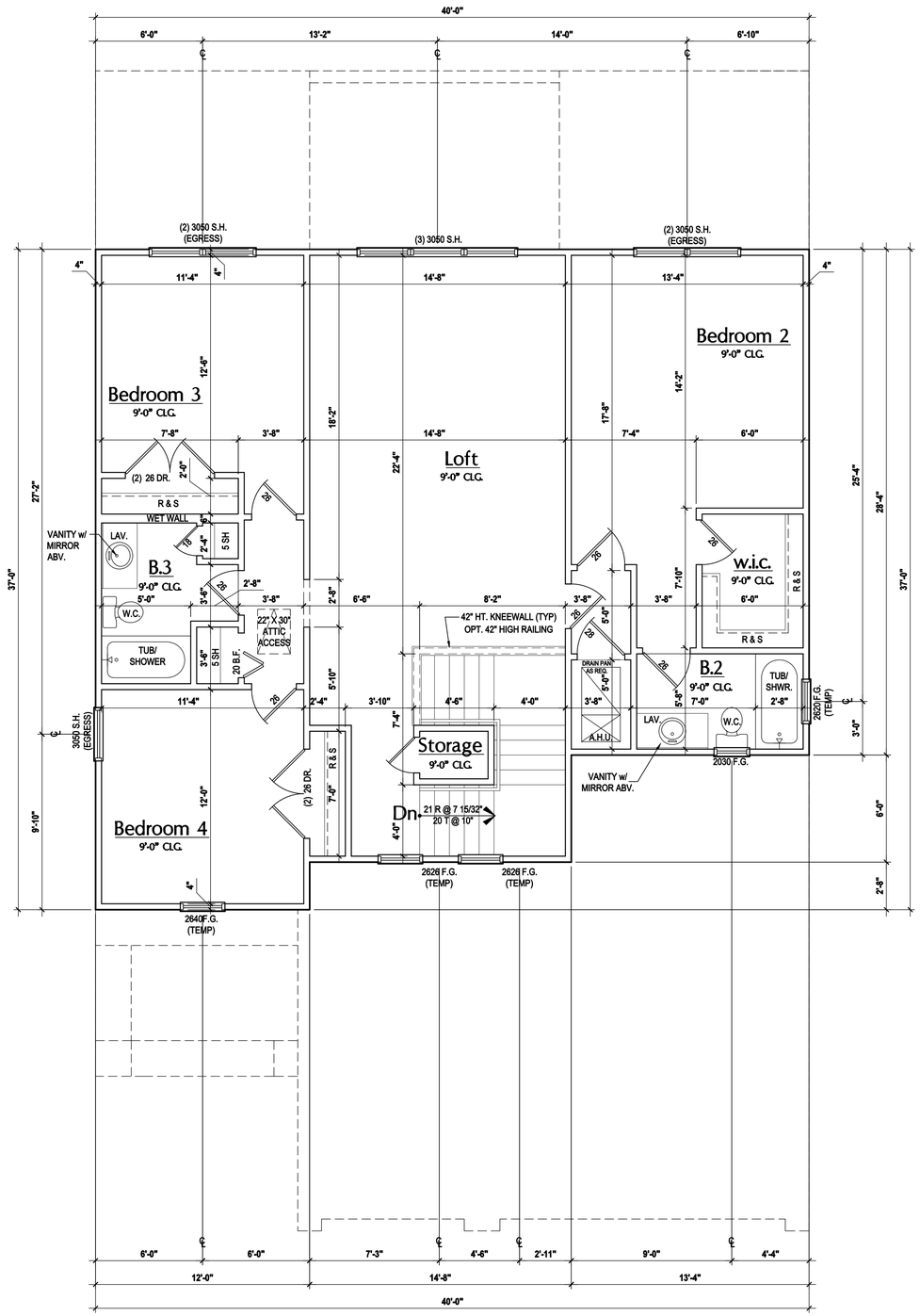

Second Floor Plan "B"

(Standard)

SCALE: 1/8" = 1'-0" (11x17) 1/4" = 1'-0" (22x34)

GENERAL NOTES KEY:

THIS STRUCTURE HAS BEEN DESIGNED TO MEET OR EXCEED REQUIREMENTS OF THE (2017) FLORIDA BUILDING CODE (6TH EDITION)

ABBREVIATIONS:

- 2- # OF DOORS.
- 2- # OF WINDOWS.
- MT - METAL THRESHOLD
- FR - FRENCH DOORS
- SL - SIDE LIGHT
- FG - FIXED GLASS
- TR - TRANSOM
- GB - GLASS BLOCK
- PKT - POCKET DOOR
- OBS - OBSCURED GLASS
- TEMP - TEMPERED GLASS
- SH - SINGLE HUNG
- DH - DOUBLE HUNG
- HR - HORIZONTAL ROLLER
- BP - BYPASS
- BF - BIFOLD
- TYP. - TYPICAL

NOTE:
SPECIALTY WINDOWS/DOORS, FIXED GLASS WINDOWS, AND TRANSOMS ARE NOTED ON PLANS.

NOTES:

1. CONTRACTOR TO VERIFY ALL DIMENSIONS ON JOB SITE.
2. DO NOT SCALE PRINTS! CONSTRUCTION TO BE FROM CALCULATED DIMENSIONS ONLY. ANY DISCREPANCIES OR ERRORS TO BE REPORTED PROMPTLY TO SUPERVISOR FOR CLARIFICATION.
3. MECHANICAL EQUIP. LOCATIONS WILL BE DETERMINED BY COMMUNITY AND COUNTY CODES.
4. A/C CONDENSER UNIT TO BE ANCHORED TO SLAB PER CODE M307.2 & M1309.3.
5. PROVIDE RECESS H&C WATER w/ DRAIN @ WASHER SPACE.
6. VENT DRYER THRU EXTERIOR WALL U.N.O.
7. PROVIDE COLD WATER LINE FOR ICE MAKER LINE @ REF. SPACE.
8. SAG RESISTANT DRYWALL ON ALL CEILINGS.
9. PULL ALL DIMENSIONS FROM THE REAR OF PLAN.
10. REFER TO EXTERIOR ELEVATIONS & TYP. DETAIL SHEETS FOR EXTERIOR WALL FINISH SPEC'S.
11. REFER TO DETAIL SHEETS FOR FLASHING REQUIREMENTS AT ALL WOOD TO MASONRY INTERFACES.
12. ALL INTERIOR FRAME WALL DIMENSIONS TO BE 3 $\frac{1}{2}$" U.N.O.
13. ALL EXTERIOR BLOCK WALL DIMENSIONS TO BE 7 $\frac{3}{4}$" U.N.O.
14. ALL INT. FIRST FLOOR CEILINGS AT 9'-4". U.N.O.
    ** ALL INT. SECOND FLOOR CEILINGS AT 9'-0". U.N.O.
15. C.M.U. & FRAME WALL SYSTEM SEGMENTS WHICH HAVE AN UNINTERRUPTED LENGTH OF 12'-0" OR MORE SHALL BE CONSIDERED SHEAR WALL SWS = SHEAR WALL SEGMENTS.
16. OPENING BETWEEN GARAGE AND RESIDENCE SHALL BE EQUIPPED w/ A 20 MIN. FIRE RATED SOLID WOOD OR HONEYCOMB CORE STEEL DOOR NOT LESS THAN 1 3/8" THICKNESS AS PER FBC-R302.5.1.
17. INSTALL 5/8" TYPE X DRYWALL ON GARAGE CEILING BENEATH HABITABLE ROOMS (TYP.)
18. *GARAGE DOOR TO BE CERTIFIED BY MFR. FOR 140 M.P.H.*
19. *ALL TUB & SHOWER UNITS WILL HAVE ANTI-SCALDING DEVICES INSTALLED.*
20. ALL OPERABLE WINDOWS LOCATED MORE THAN 72" ABV. SURFACE BELOW SHALL HAVE THE LOWEST PORTION OF WINDOW CLEAR OPENING A MIN. OF 24" ABOVE FINISHED FLOOR BEING SERVER PER (FBC-R312.2).
21. *ALL INT. DOORS TO BE 6'-8" TALL U.N.O. OR PER BUILDER / CLIENT*
22. 1/2" GYPSUM BOARD APPLIED TO THE GARAGE SIDE OF WALL TO UNDERSIDE OF DECKING
23. ALL WINDOW AND DOOR ROUGH OPENINGS VARY PER MANUFACTURER'S SPECIFICATIONS, AND ARE NOT REFLECTED ON THE PLANS. DIMENSIONS PROVIDED ON PLANS ARE USED FOR AN APPROXIMATE LOCATION OF WINDOWS & DOORS, AND DO NOT REFLECT THE ROUGH OPENINGS REQUIRED FOR PROPER INSTALLATION. BUILDER WILL BE REQUIRED TO CROSS-REFERENCE ROUGH OPENINGS AND PLAN DIMENSIONS.
24. SOIL TESTING IS RECOMMENDED, BUT IS NOT REQUIRED. THE DESIGN TEAM AT MJS & E.O.R STRONGLY RECOMMEND A SOIL TEST TO CONFIRM SOIL BEARING CAPACITY AND SURFACE GEO-TECHNICAL CONDITIONS. FOOTINGS SHALL BEAR ON UNDISTURBED SOIL A/O PROPERLY COMPACTED FILL. (2000 PSF MIN.). FILL MATERIAL SHALL BE COMPACTED TO 95% DENSITY OF A STANDARD PROCTOR. TO BE VERIFIED BY GENERAL CONTRACTOR / OWNER.

DOOR NOTE KEY:

DOOR SIZE CALLOUT:

20 = 2'-0"	40 B.F. = 4'-0" BIFOLD
24 = 2'-4"	50 B.F. = 5'-0" BIFOLD
26 = 2'-6"	60 B.F. = 6'-0" BIFOLD
28 = 2'-8"	
30 = 3'-0"	

WINDOW NOTE KEY:

WINDOW SIZE CALLOUT:
2040 = 2'-0" x 4'-0"
2050 = 2'-0" x 5'-0"
2060 = 2'-0" x 6'-0"

- ALL WINDOW CALLOUTS ARE MEASURED IN FEET & INCHES AS PER THE EXAMPLE TABLE ABOVE.

THOMPSON ENGINEERING GROUP, INC.
4401 Vineland Road Suite A6 Orlando, FL 32811
Ph: (407) 734-1450
Fax: (407) 734-1790
www.tegfl.com

815 Orienta Ave. Suite# 1040
Altamonte Springs, FL. 32701
Ph: (407) 629-6711
Fax: (407) 629-6776
www.mjshomedesigns.com

MJS designers group
residential-commercial-architecture

WRITTEN DIMENSIONS SHALL HAVE PRECEDENCE OVER SCALE DIMENSIONS.
Contractors shall verify and be responsible for all dimensions and conditions of the job and M.J.S., Inc. must be notified in writing of any changes in the dimensions, conditions and specifications appearing on these plans.

40-2922

LARGO (WS)
Lot # - Subdivision
Street Address
City, State, Zip

A division of Park Square Enterprises Inc.
5200 Vineland Rd. Suite #200
Orlando, Fl. 32811
Phone: (407) 529-3000

Park Square HOMES

ISSUE DATE	08/27/2020
REVISIONS	
PROJECT:	00-0000
SCALE:	AS NOTED
DRAWN BY:	S.B.
DESIGNED BY:	MJS

FLOOR PLAN
A3.B

© COPYRIGHT 2016 PARK SQUARE HOMES HEREBY RESERVES ITS COMMON LAW COPYRIGHTS IN THESE PLANS, IDEAS AND DESIGNS. THESE PLANS, IDEAS AND DESIGNS ARE NOT TO BE COPIED OR MODIFIED IN ANY MATTER OR FORM WHATSOEVER, NOR ARE THEY TO BE ASSIGNED TO ANY THIRD PARTY WITHOUT FIRST OBTAINING THE EXPRESS WRITTEN PERMISSION FROM PARK SQUARE HOMES.

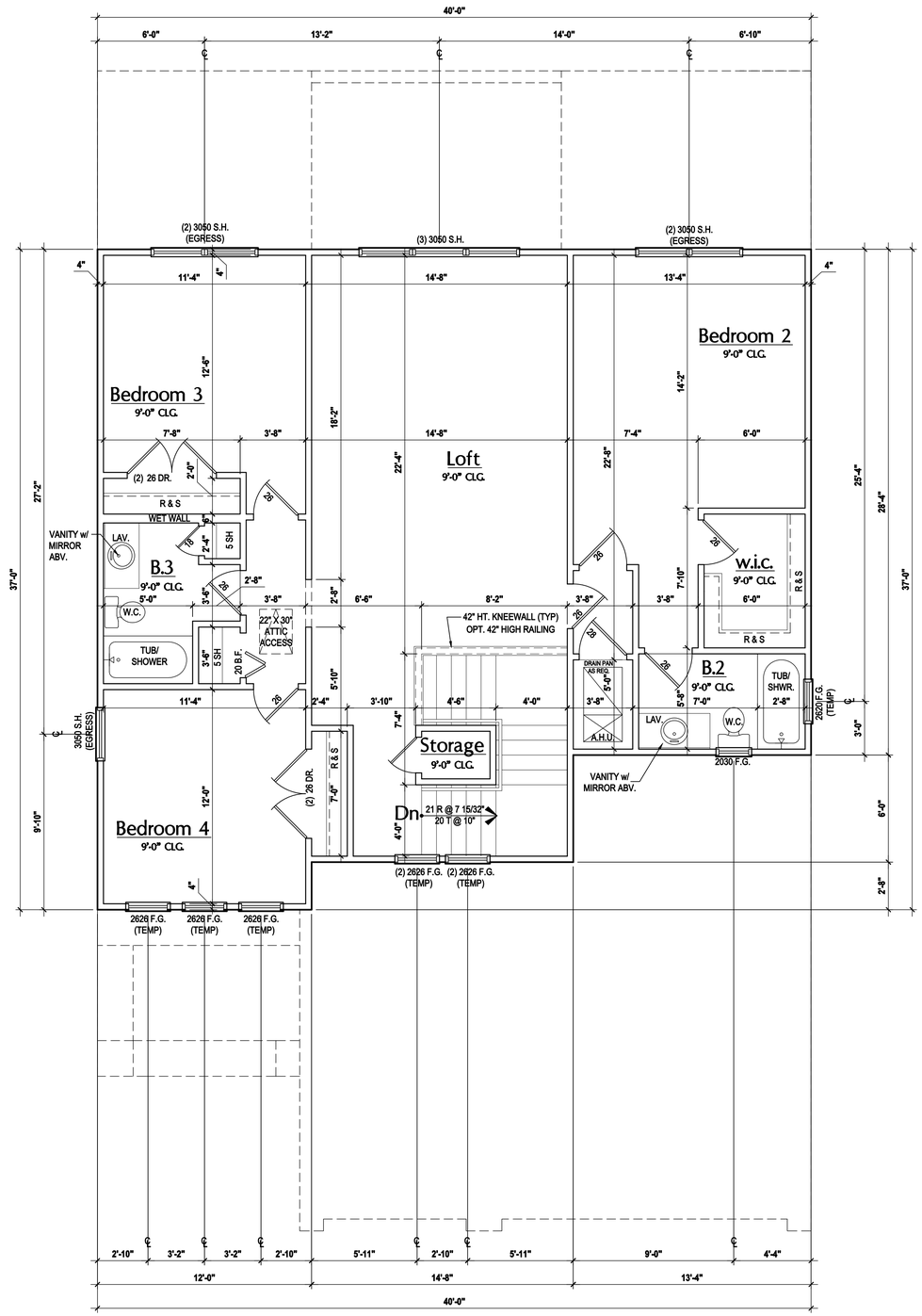

Second Floor Plan "C"

(Standard)

SCALE: 1/8" = 1'-0" (11x17) 1/4" = 1'-0" (22x34)

GENERAL NOTES KEY:

THIS STRUCTURE HAS BEEN DESIGNED TO MEET OR EXCEED REQUIREMENTS OF THE (2017) FLORIDA BUILDING CODE (6TH EDITION)

ABBREVIATIONS:

- 2- # OF DOORS.
- 2- # OF WINDOWS.
- MT - METAL THRESHOLD
- FR - FRENCH DOORS
- SL - SIDE LIGHT
- FG - FIXED GLASS
- TR - TRANSOM
- GB - GLASS BLOCK
- PKT - POCKET DOOR
- OBS - OBSCURED GLASS
- TEMP - TEMPERED GLASS
- SH - SINGLE HUNG
- DH - DOUBLE HUNG
- HR - HORIZONTAL ROLLER
- BP - BYPASS
- BF - BIFOLD
- TYP. - TYPICAL

NOTE:
SPECIALTY WINDOWS/DOORS, FIXED GLASS WINDOWS, AND TRANSOMS ARE NOTED ON PLANS.

NOTES:

1. CONTRACTOR TO VERIFY ALL DIMENSIONS ON JOB SITE.
2. DO NOT SCALE PRINTS! CONSTRUCTION TO BE FROM CALCULATED DIMENSIONS ONLY. ANY DISCREPANCIES OR ERRORS TO BE REPORTED PROMPTLY TO SUPERVISOR FOR CLARIFICATION.
3. MECHANICAL EQUIP. LOCATIONS WILL BE DETERMINED BY COMMUNITY AND COUNTY CODES.
4. A/C CONDENSER UNIT TO BE ANCHORED TO SLAB PER CODE M307.2 & M1309.3.
5. PROVIDE RECESS H&C WATER w/ DRAIN @ WASHER SPACE.
6. VENT DRYER THRU EXTERIOR WALL U.N.O.
7. PROVIDE COLD WATER LINE FOR ICE MAKER LINE @ REF. SPACE.
8. SAG RESISTANT DRYWALL ON ALL CEILINGS.
9. PULL ALL DIMENSIONS FROM THE REAR OF PLAN.
10. REFER TO EXTERIOR ELEVATIONS & TYP. DETAIL SHEETS FOR EXTERIOR WALL FINISH SPEC'S.
11. REFER TO DETAIL SHEETS FOR FLASHING REQUIREMENTS AT ALL WOOD TO MASONRY INTERFACES.
12. ALL INTERIOR FRAME WALL DIMENSIONS TO BE 3 $\frac{1}{2}$" U.N.O.
13. ALL EXTERIOR BLOCK WALL DIMENSIONS TO BE 7 $\frac{3}{4}$" U.N.O.
14. ALL INT. FIRST FLOOR CEILINGS AT 9'-4" U.N.O.
    ** ALL INT. SECOND FLOOR CEILINGS AT 9'-0" U.N.O.
15. C.M.U. & FRAME WALL SYSTEM SEGMENTS WHICH HAVE AN UNINTERRUPTED LENGTH OF 12'-0" OR MORE SHALL BE CONSIDERED SHEAR WALL SWS = SHEAR WALL SEGMENTS.
16. OPENING BETWEEN GARAGE AND RESIDENCE SHALL BE EQUIPPED w/ A 20 MIN. FIRE RATED SOLID WOOD OR HONEYCOMB CORE STEEL DOOR NOT LESS THAN 1 3/8" THICKNESS AS PER FBC-R302.5.1.
17. INSTALL 5/8" TYPE X DRYWALL ON GARAGE CEILING BENEATH HABITABLE ROOMS (TYP.)
18. *GARAGE DOOR TO BE CERTIFIED BY MFR. FOR 140 M.P.H.*
19. *ALL TUB & SHOWER UNITS WILL HAVE ANTI-SCALDING DEVICES INSTALLED.*
20. ALL OPERABLE WINDOWS LOCATED MORE THAN 72" ABV. SURFACE BELOW SHALL HAVE THE LOWEST PORTION OF WINDOW CLEAR OPENING A MIN. OF 24" ABOVE FINISHED FLOOR BEING SERVER PER (FBC-R312.2).
21. *ALL INT. DOORS TO BE 6'-8" TALL U.N.O. OR PER BUILDER / CLIENT*
22. 1/2" GYPSUM BOARD APPLIED TO THE GARAGE SIDE OF WALL TO UNDERSIDE OF DECKING
23. ALL WINDOW AND DOOR ROUGH OPENINGS VARY PER MANUFACTURER'S SPECIFICATIONS, AND ARE NOT REFLECTED ON THE PLANS. DIMENSIONS PROVIDED ON PLANS ARE USED FOR AN APPROXIMATE LOCATION OF WINDOWS & DOORS, AND DO NOT REFLECT THE ROUGH OPENINGS REQUIRED FOR PROPER INSTALLATION. BUILDER WILL BE REQUIRED TO CROSS-REFERENCE ROUGH OPENINGS AND PLAN DIMENSIONS.
24. SOIL TESTING IS RECOMMENDED, BUT IS NOT REQUIRED. THE DESIGN TEAM AT MJS & E.O.R STRONGLY RECOMMEND A SOIL TEST TO CONFIRM SOIL BEARING CAPACITY AND SURFACE GEO-TECHNICAL CONDITIONS. FOOTINGS SHALL BEAR ON UNDISTURBED SOIL A/O PROPERLY COMPACTED FILL. (2000 PSF MIN.). FILL MATERIAL SHALL BE COMPACTED TO 95% DENSITY OF A STANDARD PROCTOR. TO BE VERIFIED BY GENERAL CONTRACTOR / OWNER.

DOOR NOTE KEY:

DOOR SIZE CALLOUT:

20 = 2'-0"	40 B.F. = 4'-0" BIFOLD
24 = 2'-4"	50 B.F. = 5'-0" BIFOLD
26 = 2'-6"	60 B.F. = 6'-0" BIFOLD
28 = 2'-8"	
30 = 3'-0"	

WINDOW NOTE KEY:

WINDOW SIZE CALLOUT:
2040 = 2'-0" x 4'-0"
2050 = 2'-0" x 5'-0"
2060 = 2'-0" x 6'-0"

- ALL WINDOW CALLOUTS ARE MEASURED IN FEET & INCHES AS PER THE EXAMPLE TABLE ABOVE.

THOMPSON ENGINEERING GROUP, INC.
4401 Vineland Road Suite A6 Orlando, FL 32811
Ph: (407) 734-1450
Fax: (407) 734-1790
www.tegfl.com

815 Orienta Ave. Suite# 1040
Altamonte Springs, FL. 32701
Ph: (407) 629-6711
Fax: (407) 629-6776
www.mjshomedesigns.com

MJS designers group
residential-commercial-architecture

WRITTEN DIMENSIONS SHALL HAVE PRECEDENCE OVER SCALE DIMENSIONS.
Contractors shall verify and take responsibility for all dimensions and conditions of the job and M.J.S., Inc. must be notified in writing of any changes in the dimensions, conditions and specifications appearing on these plans.

40-2922

LARGO (WS)
Lot # - Subdivision
Street Address
City, State, Zip

A division of Park Square Enterprises Inc.
5200 Vineland Rd. Suite #200
Orlando, Fl. 32811
Phone: (407) 529-3000

Park Square HOMES

ISSUE DATE	08/27/2020
REVISIONS	
PROJECT:	00-0000
SCALE:	AS NOTED
DRAWN BY:	S.B.
DESIGNED BY:	MJS

FLOOR PLAN
A3.C

© COPYRIGHT 2016 PARK SQUARE HOMES HEREBY RESERVES ITS COMMON LAW COPYRIGHTS IN THESE PLANS, IDEAS AND DESIGNS. THESE PLANS, IDEAS AND DESIGNS ARE NOT TO BE COPIED OR MODIFIED IN ANY MATTER OR FORM WHATSOEVER, NOR ARE THEY TO BE ASSIGNED TO ANY THIRD PARTY WITHOUT FIRST OBTAINING THE EXPRESS WRITTEN PERMISSION FROM PARK SQUARE HOMES.

Front Elevation "A"

(Standard)

SCALE: 1/8" = 1'-0" (11x17) 1/4" = 1'-0" (22x34)

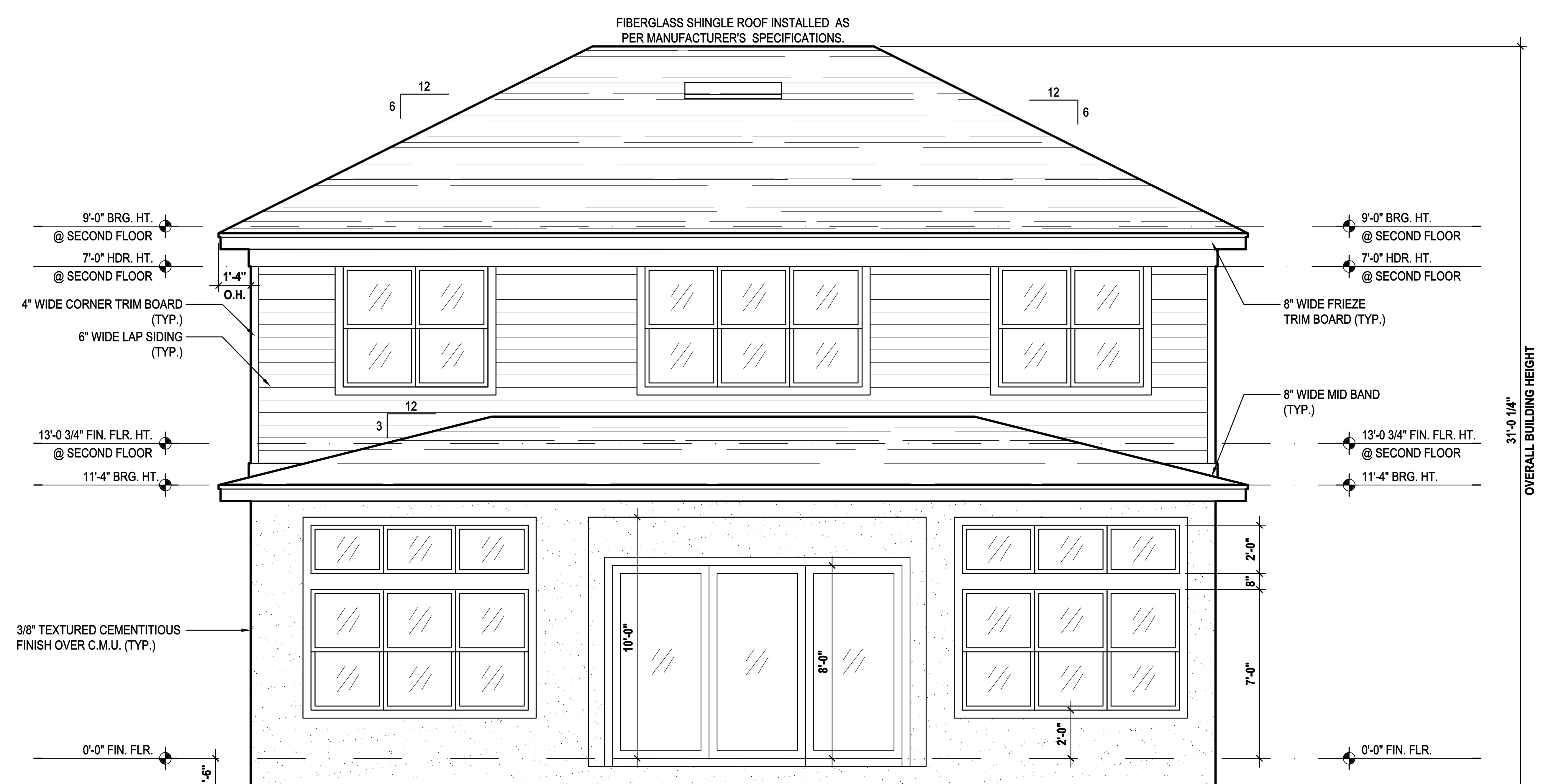

Rear Elevation "A"

(Standard)

SCALE: 1/8" = 1'-0" (11x17) 1/4" = 1'-0" (22x34)

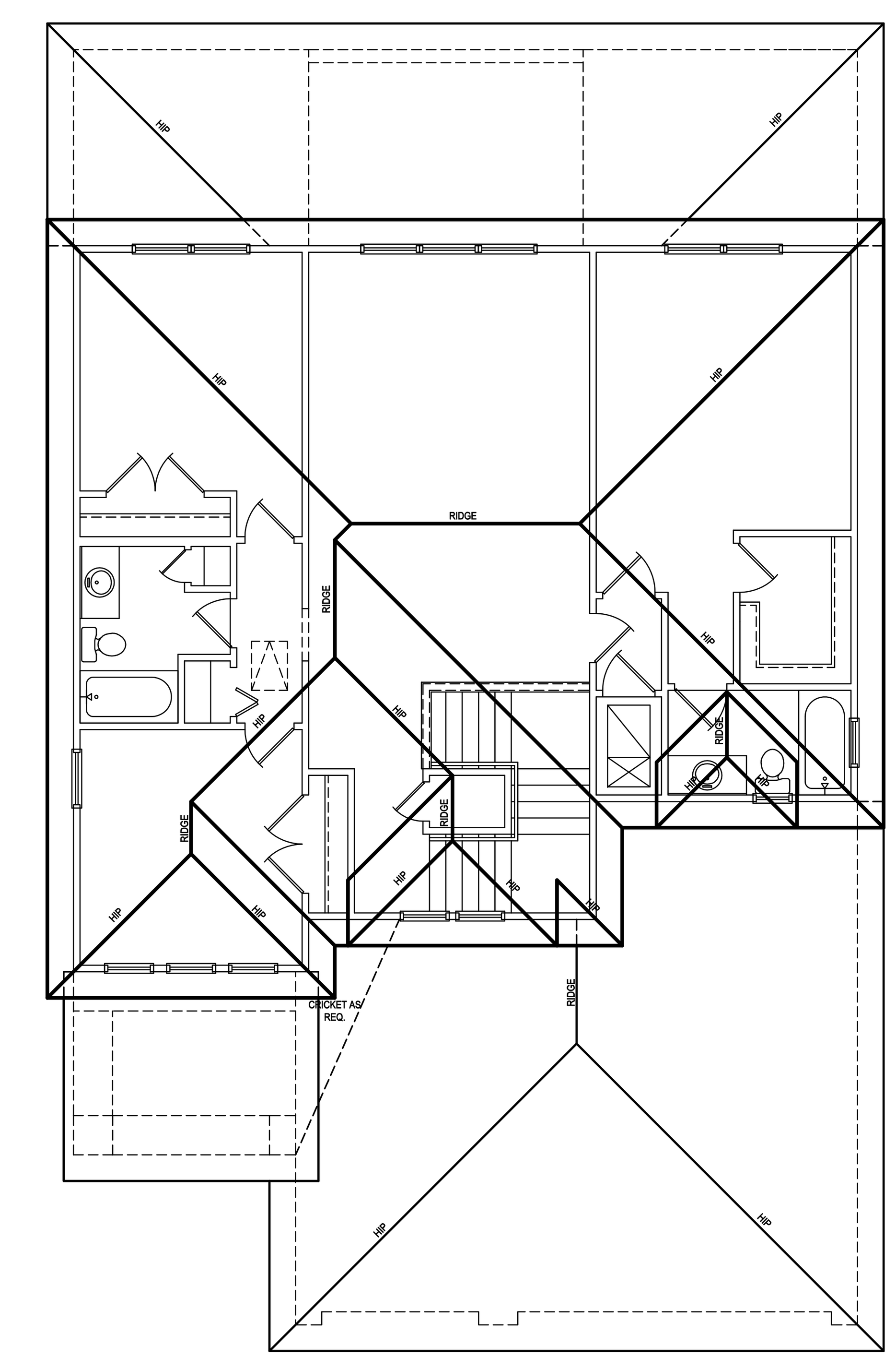

Roof Layout

SCALE: 1/16" = 1'-0" (11x17) 1/8" = 1'-0" (22x34)

ATTIC VENT CALC'S:

2017 FLORIDA BUILDING CODE (6TH EDITION) SECTION R806
MIN. 40% - MAX 50% OF REQUIRED VENTILATION TO BE IN UPPER PORTION OF ATTIC SPACE AND THE BALANCE TO BE IN LOWER PORTION (EAVES).
(OFF-RIDGE VENT MAXIMUM OPENING SIZES)

MINIMUM NET VENTILATION AREA SHALL BE $\frac{1}{150}$ OF VENTED SPACE.

TOTAL VENTED SPACE: $\frac{3,354}{300}$ = 11.18 SF. NET FREE REQUIRED

UPPER PORTION VENTILATION TOTAL: 4.472 SF.
TO BE PROVIDED w/ OFF RIDGE VENTS:
6 VENTS @ .745 /PER VENT

TILE: O'HAGIN MODEL "S", SHINGLE: LOMANCO 770-D).

LOWER PORTION VENTILATION TOTAL: 6.708 SF.
TO BE PROVIDED w/ SOFFITS @ EAVE:
80.00 LF. @ 0.083 SF. VENTING/LF.

UPPER ROOF PERCENTAGE: 40%
LOWER ROOF PERCENTAGE: 60%

TEG THOMPSON ENGINEERING GROUP, INC.
4401 Vineland Road Suite A6 Orlando, FL. 32811
Ph: (407) 734-1450
Fax: (407) 734-1790
www.tegfl.com

815 Orienta Ave. Suite# 1040
Altamonte Springs, FL. 32701
Ph: (407) 629-6711
Fax: (407) 629-6776
www.mjshomedesigns.com

WRITTEN DIMENSIONS SHALL HAVE PRECEDENCE OVER SCALE DIMENSIONS.
Contractors shall verify and be responsible for dimensions and conditions of the job and MJS, Inc. must be notified in writing of any changes in the dimensions, conditions and specifications appearing on these plans.

MJS designers group
residential·commercial·architecture

40-2922
LARGO (WS)
Lot # - Subdivision
Street Address
City, State, Zip

A division of Park Square Enterprises Inc.
5200 Vineland Rd. Suite #200
Orlando, Fl. 32811
Phone: (407) 529-3000
Park Square HOMES

ISSUE DATE	08/27/2020
REVISIONS	
PROJECT:	00-0000
SCALE:	AS NOTED
DRAWN BY:	S.B.
DESIGNED BY:	MJS

ELEVATIONS "A"
A4.A

© COPYRIGHT 2016 PARK SQUARE HOMES HEREBY RESERVES ITS COMMON LAW COPYRIGHTS IN THESE PLANS, IDEAS AND DESIGN. THESE PLANS, IDEAS AND DESIGNS ARE NOT TO BE COPIED OR MODIFIED IN ANY MATTER OR FORM WHATSOEVER, NOR ARE THEY TO BE ASSIGNED TO ANY THIRD PARTY WITHOUT FIRST OBTAINING THE EXPRESS WRITTEN PERMISSION FROM PARK SQUARE HOMES.

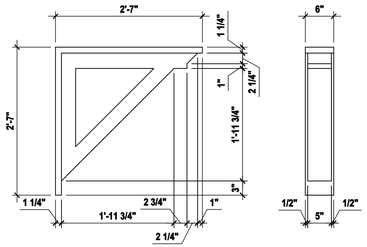

Detail #1

SCALE: 3/4" = 1'-0"

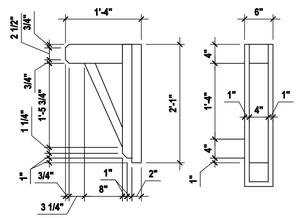

Detail #2

SCALE: 3/4" = 1'-0"

Front Elevation "B"

(Standard)

SCALE: 1/8" = 1'-0" (11x17) 1/4" = 1'-0" (22x34)

ATTIC VENT CALC'S:

2017 FLORIDA BUILDING CODE (6TH EDITION) SECTION R806
MIN. 40% - MAX 50% OF REQUIRED VENTILATION TO BE IN UPPER PORTION OF ATTIC SPACE AND THE BALANCE TO BE IN LOWER PORTION (EAVES).
(OFF-RIDGE VENT MAXIMUM OPENING SIZES)

MINIMUM NET VENTILATION AREA SHALL BE $\frac{1}{150}$ OF VENTED SPACE.

TOTAL VENTED SPACE: $\frac{3,354}{300}$ = 11.18 SF. NET FREE REQUIRED

UPPER PORTION VENTILATION TOTAL: 4.472 SF.
TO BE PROVIDED w/ OFF RIDGE VENTS: 6 VENTS @ .745 /PER VENT

TILE: O'HAGIN MODEL "S", SHINGLE: LOMANCO 770-D).

LOWER PORTION VENTILATION TOTAL: 6.708 SF.
TO BE PROVIDED w/ SOFFITS @ EAVE: 80.00 LF. @ 0.083 SF. VENTING/LF.

UPPER ROOF PERCENTAGE: 40%
LOWER ROOF PERCENTAGE: 60%

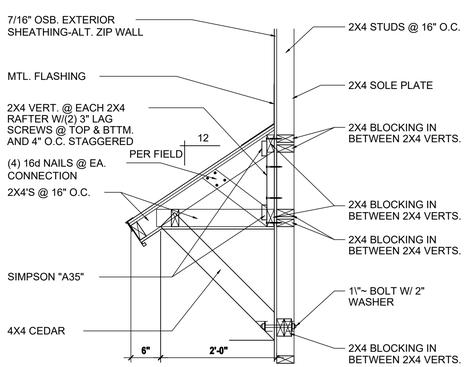

FRAME CONDITION

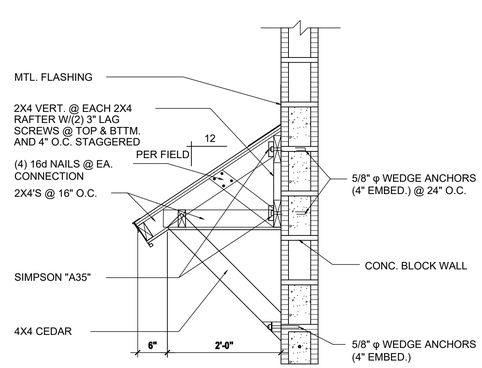

CMU CONDITION

Detail #3

SCALE: 3/4" = 1'-0"

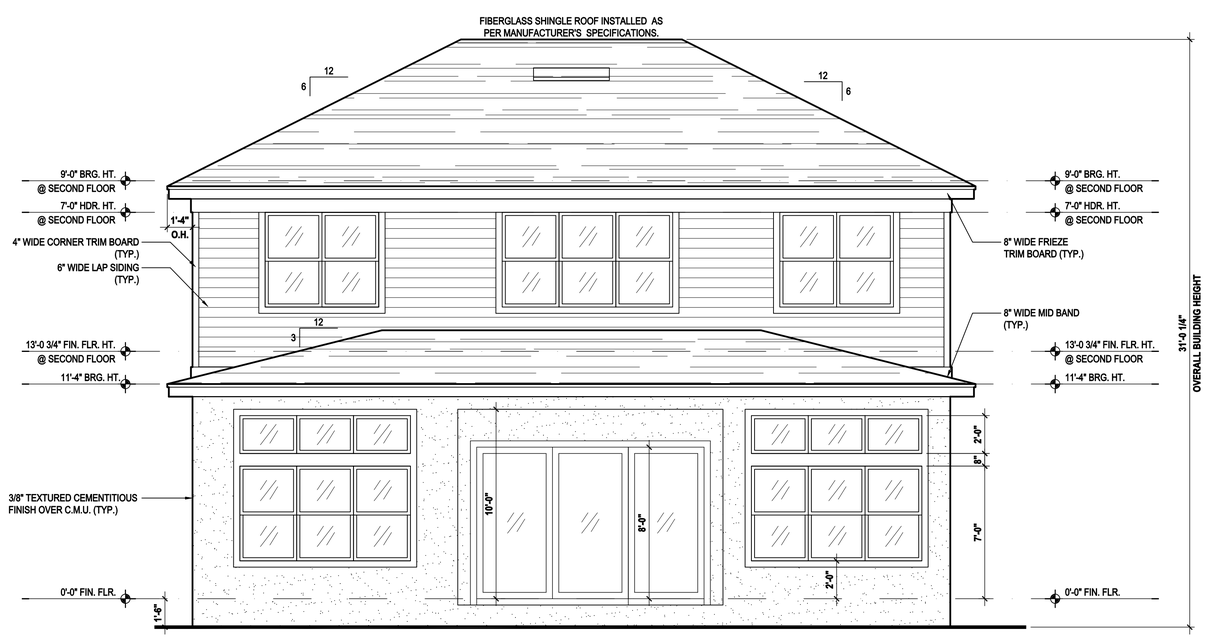

Rear Elevation "B"

(Standard)

SCALE: 1/8" = 1'-0" (11x17) 1/4" = 1'-0" (22x34)

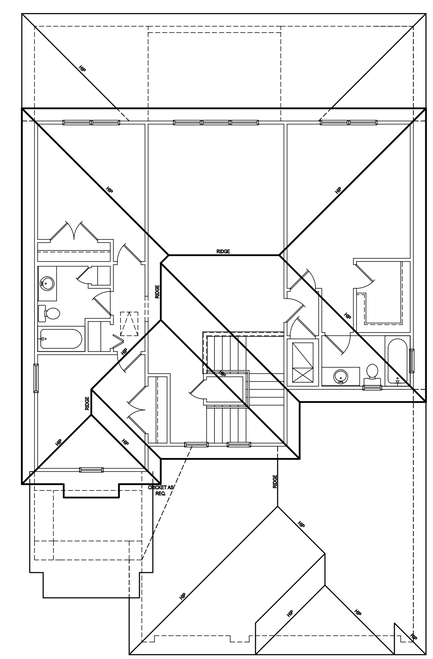

Roof Layout

SCALE: 1/16" = 1'-0" (11x17) 1/8" = 1'-0" (22x34)

THOMPSON ENGINEERING GROUP, INC.
4401 Vineland Road Suite A6 Orlando, FL 32811
Ph: (407) 734-1490
Fax: (407) 734-1790
www.tegfl.com

MJS designers group
residential-commercial-architecture
815 Orienta Ave. Suite# 1040
Altamonte Springs, FL. 32701
Ph: (407) 629-6711
Fax: (407) 629-6776
www.mjshomedesigns.com

WRITTEN DIMENSIONS SHALL HAVE PRECEDENCE OVER SCALE DIMENSIONS.
Contractors shall verify and be responsible for all dimensions and conditions of the job and MJS, Inc. must be notified in writing of any changes in the dimensions, conditions and specifications appearing on these plans.

40-2922

LARGO (WS)
Lot # - Subdivision
Street Address
City, State. Zip

Park Square HOMES
A division of Park Square Enterprises Inc.
5200 Vineland Rd. Suite #200
Orlando, Fl. 32811
Phone: (407) 529-3000

ISSUE DATE	08/27/2020
REVISIONS	
PROJECT:	00-0000
SCALE:	AS NOTED
DRAWN BY:	S.B.
DESIGNED BY:	MJS

ELEVATIONS "B"

A4.B

© COPYRIGHT 2016 PARK SQUARE HOMES HEREBY RESERVES ITS COMMON LAW COPYRIGHTS IN THESE PLANS, IDEAS AND DESIGNS. THESE PLANS, IDEAS AND DESIGNS ARE NOT TO BE COPIED OR MODIFIED IN ANY MATTER OR FORM WHATSOEVER, NOR ARE THEY TO BE ASSIGNED TO ANY THIRD PARTY WITHOUT FIRST OBTAINING THE EXPRESS WRITTEN PERMISSION FROM PARK SQUARE HOMES.

ATTIC VENT CALC'S:

2017 FLORIDA BUILDING CODE (6TH EDITION) SECTION R806
MIN. 40% - MAX 50% OF REQUIRED VENTILATION TO BE IN UPPER PORTION OF ATTIC SPACE AND THE BALANCE TO BE IN LOWER PORTION (EAVES).
(OFF-RIDGE VENT MAXIMUM OPENING SIZES)

MINIMUM NET VENTILATION AREA SHALL BE $\frac{1}{150}$ OF VENTED SPACE.

TOTAL VENTED SPACE: $\frac{3,354}{300}$ = 11.18 SF. NET FREE REQUIRED

UPPER PORTION VENTILATION TOTAL: 4.472 SF.
TO BE PROVIDED w/ OFF RIDGE VENTS:
6 VENTS @ .745 /PER VENT

TILE: O'HAGIN MODEL "S", SHINGLE: LOMANCO 770-D).

LOWER PORTION VENTILATION TOTAL: 6.708 SF.
TO BE PROVIDED w/ SOFFITS @ EAVE:
80.00 LF. @ 0.083 SF. VENTING/LF.

UPPER ROOF PERCENTAGE: 40%
LOWER ROOF PERCENTAGE: 60%

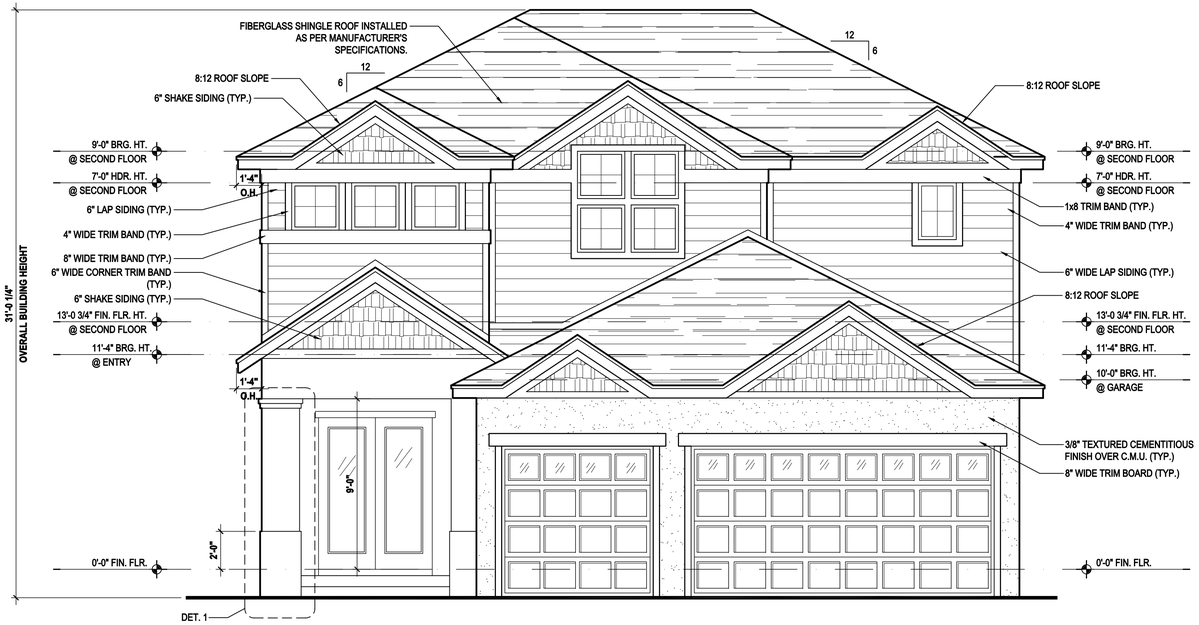

Front Elevation "C"

(Standard)

SCALE: 1/8" = 1'-0" (11x17) 1/4" = 1'-0" (22x34)

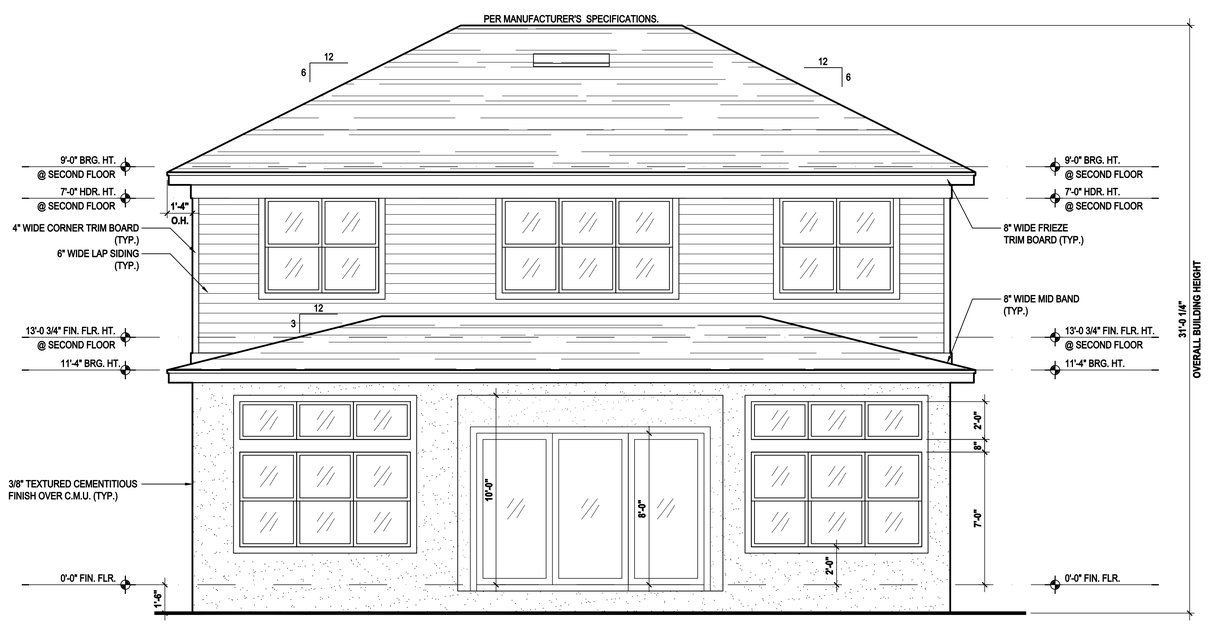

Rear Elevation "C"

(Standard)

SCALE: 1/8" = 1'-0" (11x17) 1/4" = 1'-0" (22x34)

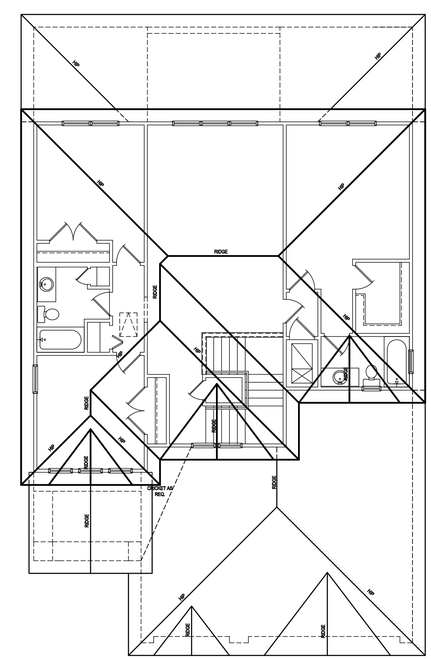

Roof Layout

SCALE: 1/16" = 1'-0" (11x17) 1/8" = 1'-0" (22x34)

THOMPSON ENGINEERING GROUP, INC.
4401 Vineland Road Suite A6 Orlando, FL 32811
Ph: (407) 734-7490
Fax: (407) 734-7790
www.tegfl.com

MJS designers group
residential-commercial-architecture
815 Orienta Ave. Suite# 1040
Altamonte Springs, FL. 32701
Ph: (407) 629-6711
Fax: (407) 629-6776
www.mjshomedesigns.com

WRITTEN DIMENSIONS SHALL HAVE PRECEDENCE OVER SCALE DIMENSIONS.
Contractors shall verify and be responsible for all dimensions and conditions of the job and MJS, Inc. must be notified in writing of any changes in the dimensions, conditions and specifications appearing on these plans.

40-2922

LARGO (WS)
Lot # - Subdivision
Street Address
City, State, Zip

A division of Park Square Enterprises Inc.
5200 Vineland Rd. Suite #200
Orlando, Fl. 32811
Phone: (407) 529-3000

Park Square HOMES

ISSUE DATE	08/27/2020
REVISIONS	
PROJECT:	00-0000
SCALE:	AS NOTED
DRAWN BY:	S.B.
DESIGNED BY:	MJS

ELEVATIONS "A"
A4.C

© COPYRIGHT 2016 PARK SQUARE HOMES HEREBY RESERVES ITS COMMON LAW COPYRIGHTS IN THESE PLANS, IDEAS AND DESIGN. THESE PLANS, IDEAS AND DESIGNS ARE NOT TO BE COPIED OR MODIFIED IN ANY MATTER OR FORM WHATSOEVER, NOR ARE THEY TO BE ASSIGNED TO ANY THIRD PARTY WITHOUT FIRST OBTAINING THE EXPRESS WRITTEN PERMISSION FROM PARK SQUARE HOMES.

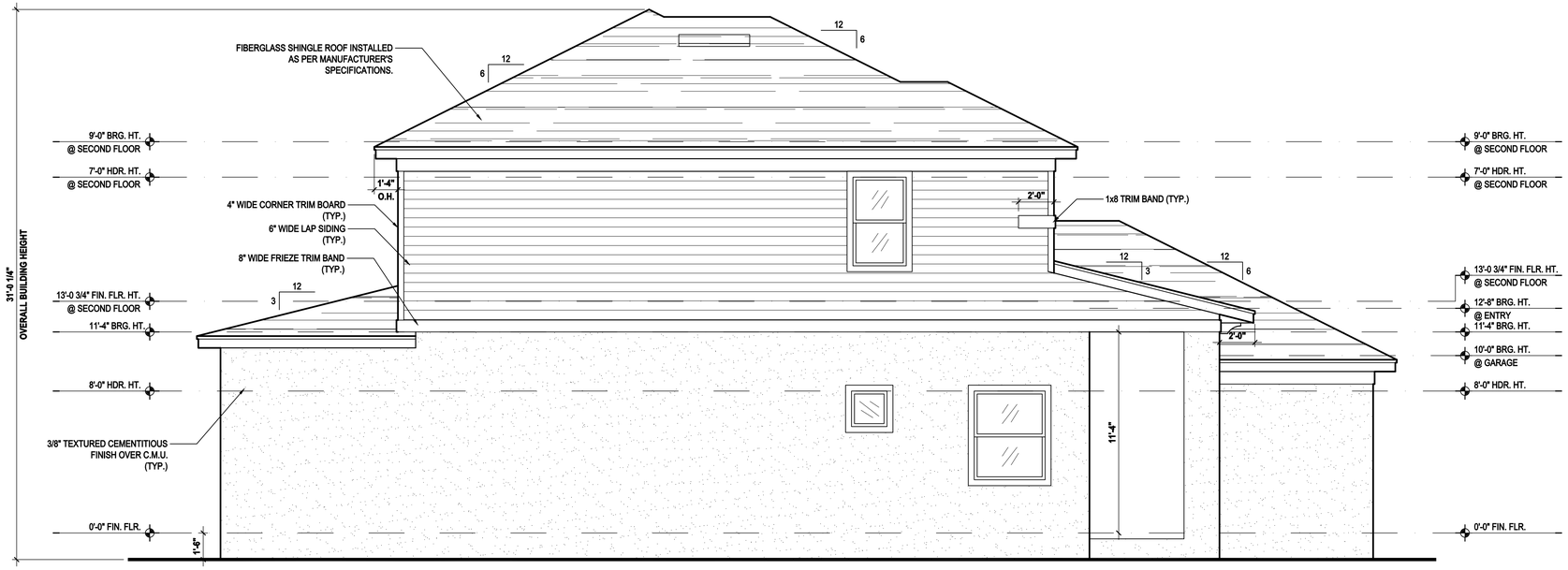

Left Elevation "A"

(Standard)

SCALE: 1/8" = 1'-0" (11x17) 1/4" = 1'-0" (22x34)

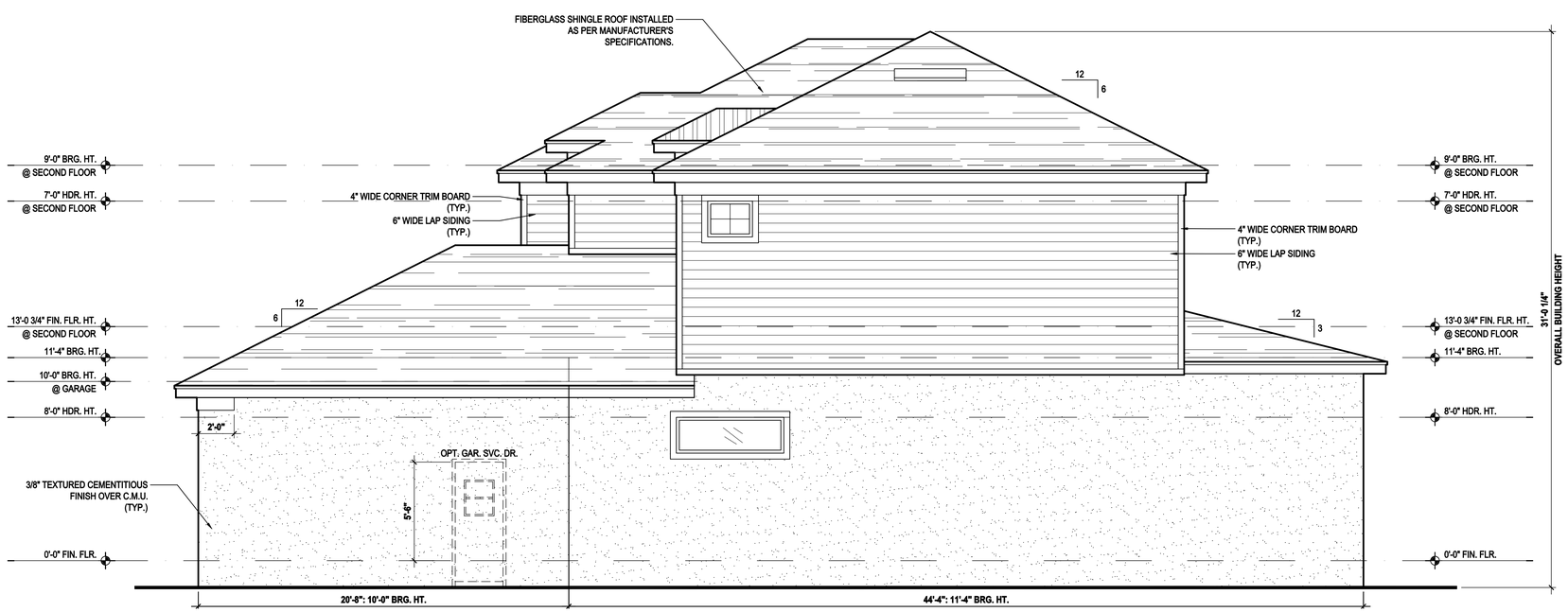

Right Elevation "A"

(Standard)

SCALE: 1/8" = 1'-0" (11x17) 1/4" = 1'-0" (22x34)

THEG
THOMPSON ENGINEERING GROUP, INC.
4401 Vineland Road Suite A6 Orlando, FL 32811
Ph: (407) 734-1450
Fax: (407) 734-1790
www.tegfl.com

MJS designers group
residential•commercial•architecture
815 Orienta Ave. Suite# 1040
Altamonte Springs, FL. 32701
Ph: (407) 629-6711
Fax: (407) 629-6776
www.mjshomedesigns.com

WRITTEN DIMENSIONS SHALL HAVE PRECEDENCE OVER SCALE DIMENSIONS.
Contractors shall verify and be responsible for all dimensions and conditions of the job and MJS, Inc. must be notified in writing of any changes in the dimensions, conditions and specifications appearing on these plans.

40-2922

LARGO (WS)
Lot # - Subdivision
Street Address
City, State. Zip

A division of Park Square Enterprises Inc.
5200 Vineland Rd. Suite #200
Orlando, Fl. 32811
Phone: (407) 529-3000
Park Square HOMES

ISSUE DATE	08/27/2020
REVISIONS	
PROJECT:	00-0000
SCALE:	AS NOTED
DRAWN BY:	S.B.
DESIGNED BY:	MJS

ELEVATIONS "A"

A5.A

© COPYRIGHT 2016 PARK SQUARE HOMES HEREBY RESERVES ITS COMMON LAW COPYRIGHTS IN THESE PLANS, IDEAS AND DESIGN. THESE PLANS, IDEAS AND DESIGNS ARE NOT TO BE COPIED OR MODIFIED IN ANY MATTER OR FORM WHATSOEVER, NOR ARE THEY TO BE ASSIGNED TO ANY THIRD PARTY WITHOUT FIRST OBTAINING THE EXPRESS WRITTEN PERMISSION FROM PARK SQUARE HOMES.

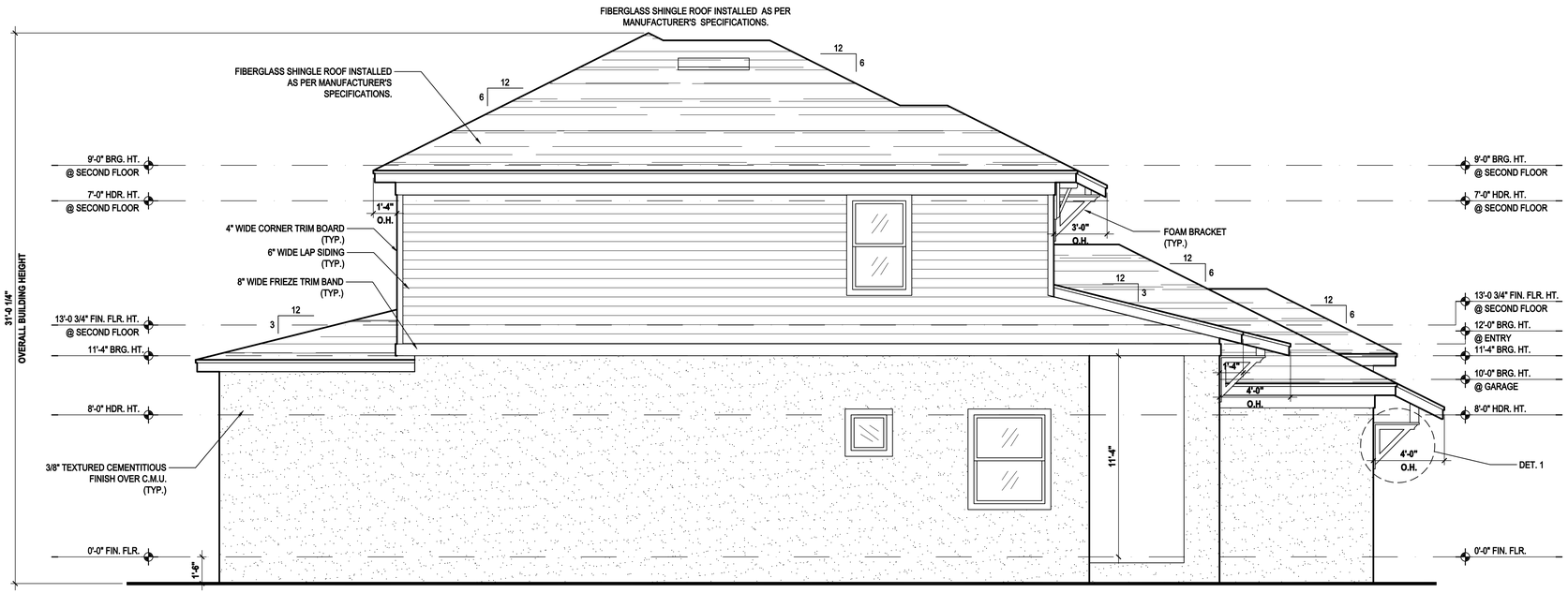

Left Elevation "B"

(Standard)

SCALE: 1/8" = 1'-0" (11x17) 1/4" = 1'-0" (22x34)

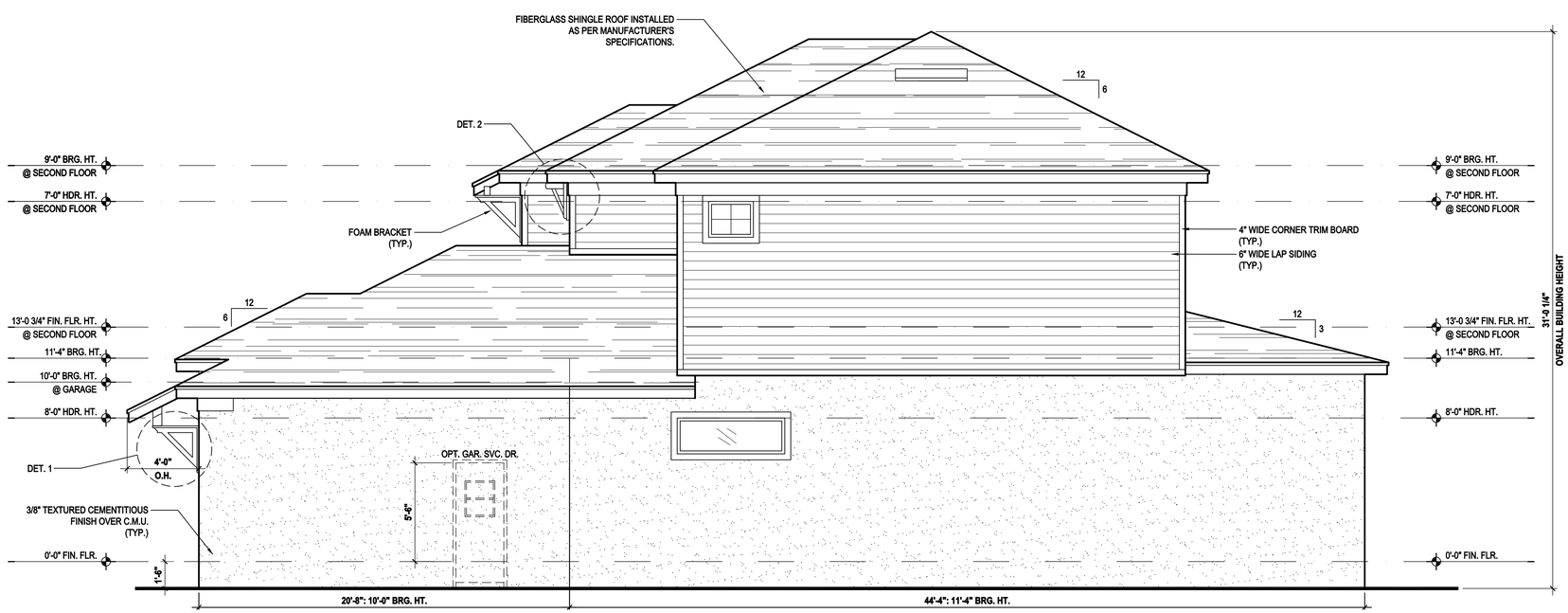

Right Elevation "B"

(Standard)

SCALE: 1/8" = 1'-0" (11x17) 1/4" = 1'-0" (22x34)

THOMPSON ENGINEERING GROUP, INC.
4401 Vineland Road Suite A6 Orlando, FL 32811
Ph: (407) 734-1450
Fax: (407) 734-1790
www.tegfl.com

815 Orienta Ave. Suite# 1040
Altamonte Springs, FL. 32701
Ph: (407) 629-6711
Fax: (407) 629-6776
www.mjshomedesigns.com

MJS designers group
residential•commercial•architecture

WRITTEN DIMENSIONS SHALL HAVE PRECEDENCE OVER SCALE DIMENSIONS.
Contractors shall verify and be responsible for all dimensions and conditions of the job and MJS, Inc. must be notified in writing of any changes in the dimensions, conditions and specifications appearing on these plans.

40-2922

LARGO (WS)
Lot # - Subdivision
Street Address
City, State. Zip

A division of Park Square Enterprises Inc.
5200 Vineland Rd. Suite #200
Orlando, Fl. 32811
Phone: (407) 529-3000

Park Square HOMES

ISSUE DATE	08/27/2020
REVISIONS	
PROJECT:	00-0000
SCALE:	AS NOTED
DRAWN BY:	S.B.
DESIGNED BY:	MJS

ELEVATIONS "B"

A5.B

© COPYRIGHT 2016 PARK SQUARE HOMES HEREBY RESERVES ITS COMMON LAW COPYRIGHTS IN THESE PLANS, IDEAS AND DESIGN. THESE PLANS, IDEAS AND DESIGNS ARE NOT TO BE COPIED OR MODIFIED IN ANY MATTER OR FORM WHATSOEVER, NOR ARE THEY TO BE ASSIGNED TO ANY THIRD PARTY WITHOUT FIRST OBTAINING THE EXPRESS WRITTEN PERMISSION FROM PARK SQUARE HOMES.

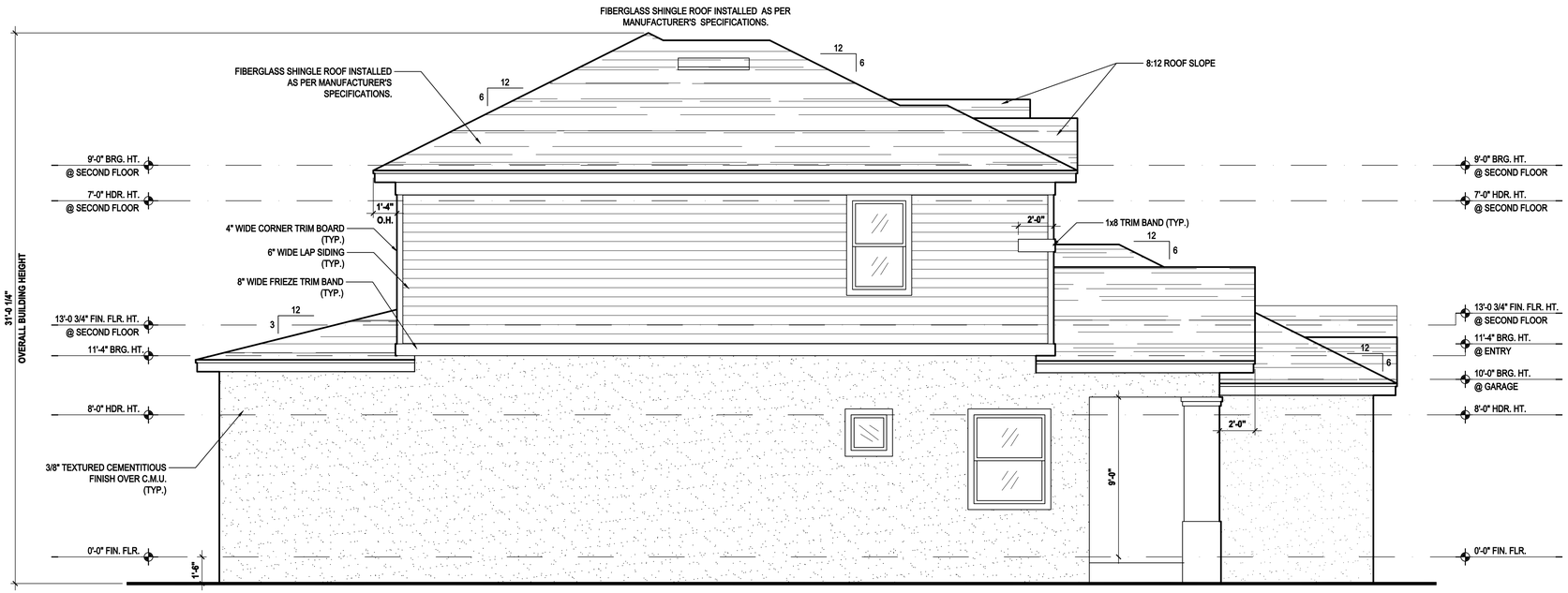

Left Elevation "C"

(Standard)

SCALE: 1/8" = 1'-0" (11x17) 1/4" = 1'-0" (22x34)

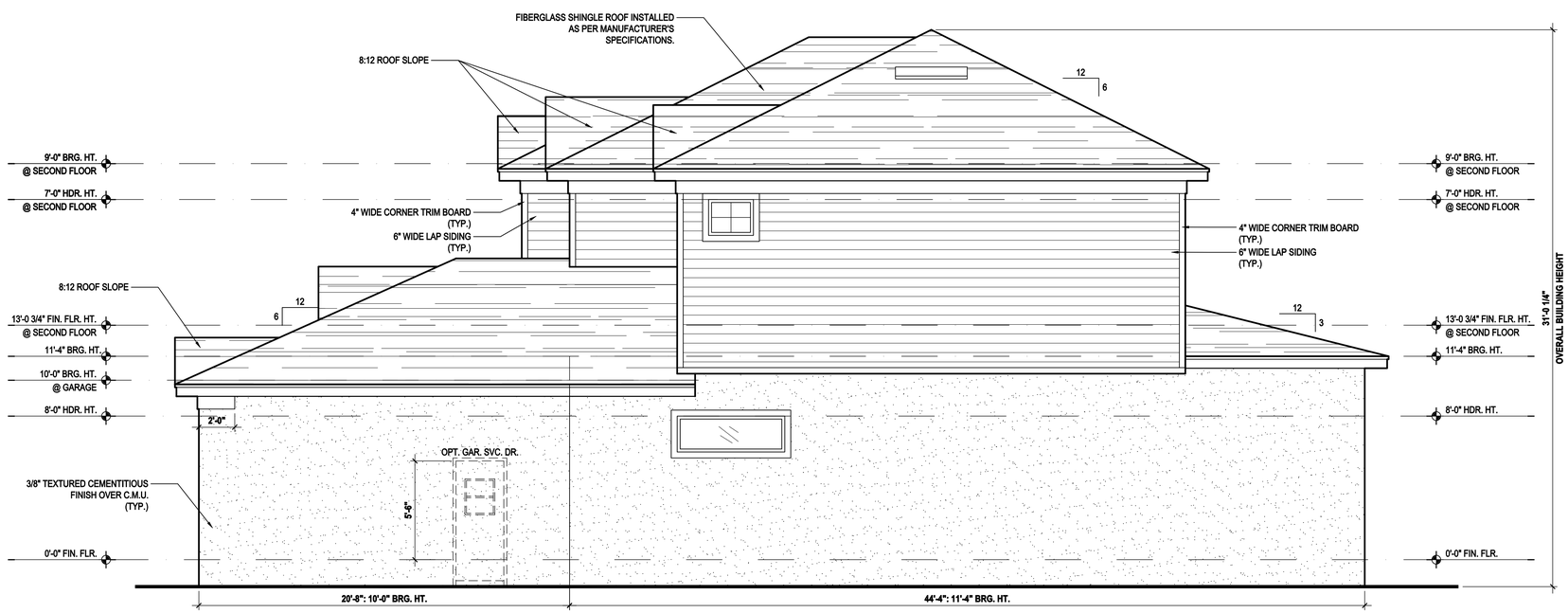

Right Elevation "C"

(Standard)

SCALE: 1/8" = 1'-0" (11x17) 1/4" = 1'-0" (22x34)

THOMPSON ENGINEERING GROUP, INC.
4401 Vineland Road Suite A6 Orlando, FL 32811
Ph: (407) 734-1450
Fax: (407) 734-1790
www.tegfl.com

815 Orienta Ave. Suite# 1040
Altamonte Springs, FL. 32701
Ph: (407) 629-6711
Fax: (407) 629-6776
www.mjshomedesigns.com

WRITTEN DIMENSIONS SHALL HAVE PRECEDENCE OVER SCALE DIMENSIONS.

Contractors shall verify and be responsible for all dimensions and conditions of the job and MJS, Inc. must be notified in writing of any changes in the dimensions, conditions and specifications depicting on these plans.

MJS designers group
residential•commercial•architecture

40-2922

LARGO (WS)
Lot # - Subdivision
Street Address
City, State. Zip

A division of Park Square Enterprises Inc.
5200 Vineland Rd. Suite #200
Orlando, Fl. 32811
Phone: (407) 529-3000

Park Square HOMES

ISSUE DATE	08/27/2020
REVISIONS	
PROJECT:	00-0000
SCALE:	AS NOTED
DRAWN BY:	S.B.
DESIGNED BY:	MJS

ELEVATIONS "B"

A5.C

© COPYRIGHT 2016 PARK SQUARE HOMES HEREBY RESERVES ITS COMMON LAW COPYRIGHTS IN THESE PLANS, IDEAS AND DESIGN. THESE PLANS, IDEAS AND DESIGNS ARE NOT TO BE COPIED OR MODIFIED IN ANY MATTER OR FORM WHATSOEVER, NOR ARE THEY TO BE ASSIGNED TO ANY THIRD PARTY WITHOUT FIRST OBTAINING THE EXPRESS WRITTEN PERMISSION FROM PARK SQUARE HOMES.

NOTES:

1. STAIRWAY CONSTRUCTION TO CONFORM TO FBCR 2017, 6TH EDITION SECTION R311.7.
2. MAX HT. OF RISER TO BE 7 3/4".
3. MIN. WIDTH OF TREAD TO BE 10" (EXCLUSIVE OF NOSING.
4. ALL TREADS LESS THAN 10" IN WIDTH SHALL HAVE APPROX. 1" OF NOSING.
5. 3/16" MAX VARIATION IN RISERS/TREADS ADJACENT TO EACH OTHER.
6. 3/8" MAX VARIATION IN ANY RISE/TREAD.
7. HAND RAIL CIRCULAR CROSS SECTION DIA. TO BE 1 1/4" - 2" OR TO PROVIDE EQUIVALENT GRASPABILITY.
8. UNDER MIN. 6" WIDE @NARROW END.
9. 34'-38" HANDRAIL HT.
10. HEADROOM CLEARANCE MIN 6'-8".

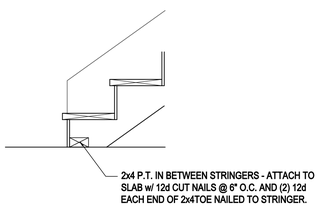

S1/06 TYP. STAIR CONNECT.

SCALE: 3/4" = 1'-0" (11x17) 1 1/2" = 1'-0" (22"x34")

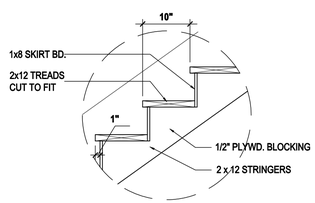

DATA: TOTAL RISE: 10-8 3/4" (18 RISERS @ 7.15 " EA.)
TOTAL RUN: 17 (17 TREADS @ 10" EA.)

S2/06 TREAD & RISER DETAIL

SCALE: 3/4" = 1'-0" (11x17) 1 1/2" = 1'-0" (22x34)

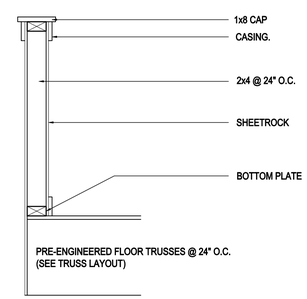

S3/06 HALF WALL DETAIL

SCALE: 3/4" = 1'-0" (11x17) 1 1/2" = 1'-0" (22x34)

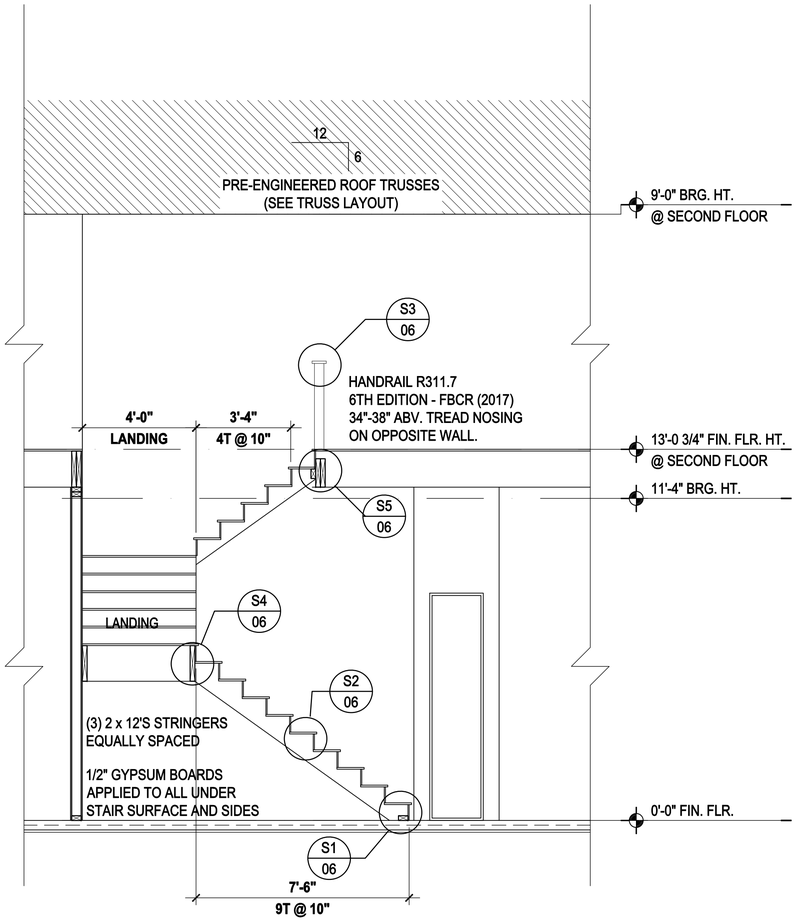

Stair Section

SCALE: 3/8" = 1'-0" (11x17) 3/4" = 1'-0" (22x34)

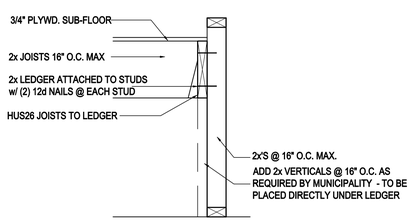

S4/06 LANDING CONNECT. DETAIL

SCALE: 3/4" = 1'-0" (11x17) 1 1/2" = 1'-0" (22x34) PLATFORM FRAMING

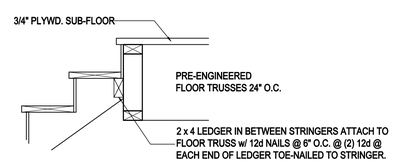

S5/06 STAIR CONNECT. @ FLR. TRUSS

SCALE: 3/4" = 1'-0" (11x17) 1 1/2" = 1'-0" (22x34) STRINGER TO FLOOR TRUSS

Stair Details

SCALE: 3/4" = 1'-0" (11x17) 1 1/2" = 1'-0" (22x34)

THOMPSON ENGINEERING GROUP, INC.
4401 Vineland Road Suite A6 Orlando, FL 32811
Ph: (407) 734-1450
Fax: (407) 734-1790
www.tegfl.com

815 Orienta Ave. Suite# 1040
Altamonte Springs, FL. 32701
Ph: (407) 629-6711
Fax: (407) 629-6776
www.mjshomedesigns.com

WRITTEN DIMENSIONS SHALL HAVE PRECEDENCE OVER SCALE DIMENSIONS.
Contractors shall verify and be responsible for all dimensions and conditions of the job and M.J.S., Inc. must be notified in writing of any changes in the dimensions, conditions and specifications appearing on these plans.

MJS designers group
residential-commercial-architecture

40-2922

LARGO (WS)
Lot # - Subdivision
Street Address
City, State. Zip

A division of Park Square Enterprises Inc.
5200 Vineland Rd. Suite #200
Orlando, Fl. 32811
Phone: (407) 529-3000

Park Square HOMES

ISSUE DATE	08/27/2020
REVISIONS	
PROJECT:	00-0000
SCALE:	AS NOTED
DRAWN BY:	S.B.
DESIGNED BY:	MJS

SECTIONS
A6

© COPYRIGHT 2016 PARK SQUARE HOMES HEREBY RESERVES ITS COMMON LAW COPYRIGHTS IN THESE PLANS, IDEAS AND DESIGNS. THESE PLANS, IDEAS AND DESIGNS ARE NOT TO BE COPIED OR MODIFIED IN ANY MATTER OR FORM WHATSOEVER, NOR ARE THEY TO BE ASSIGNED TO ANY THIRD PARTY WITHOUT FIRST OBTAINING THE EXPRESS WRITTEN PERMISSION FROM PARK SQUARE HOMES.

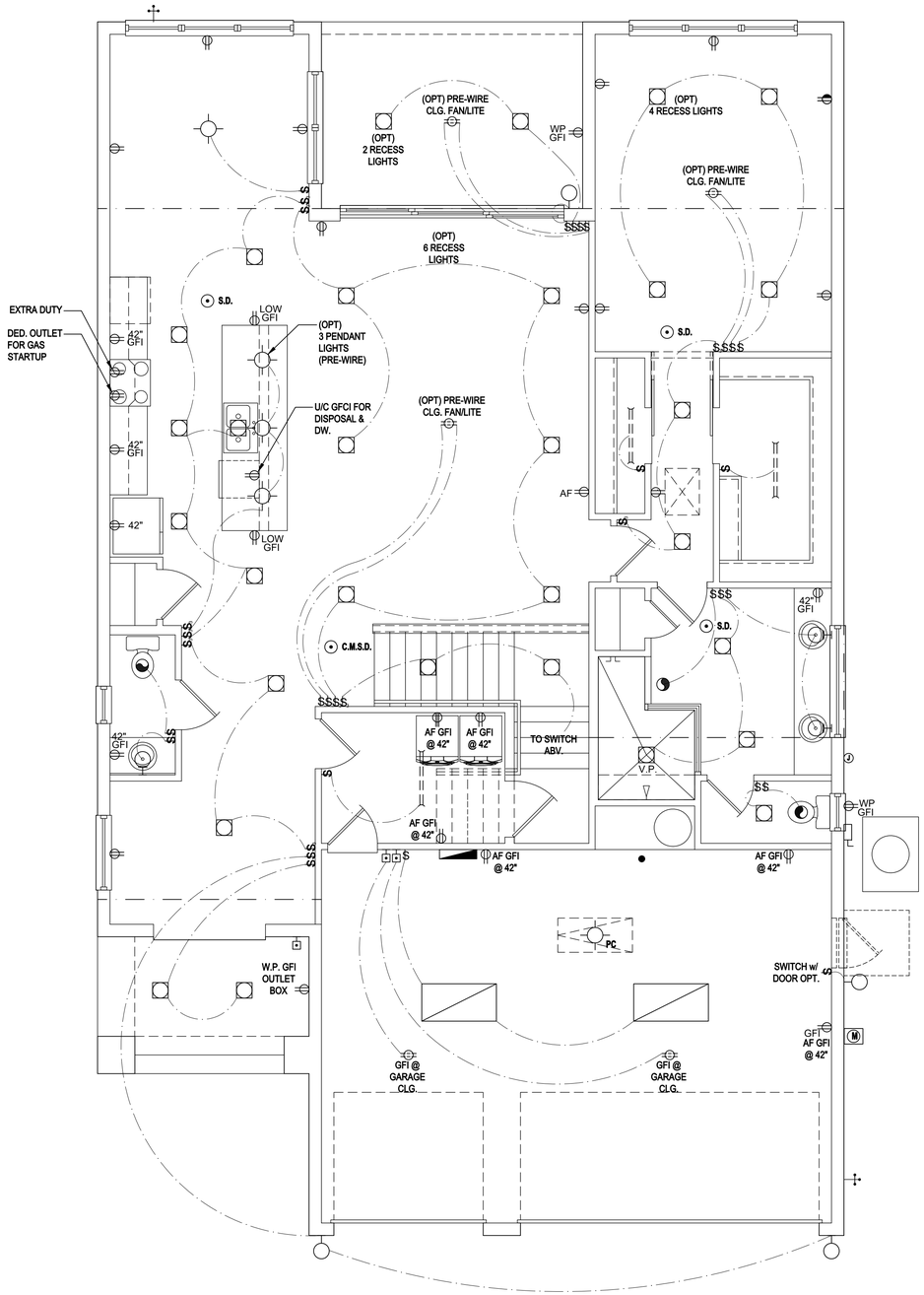

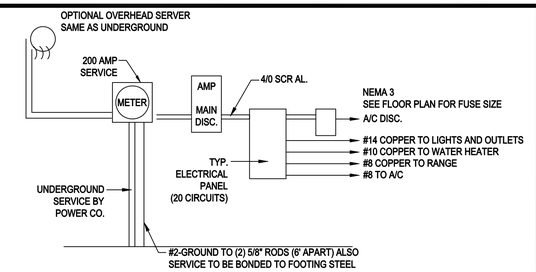

NOTE:
ALL ELECTRICAL WORK AND MATERIAL PROVIDED SHALL COMPLY WITH THE FLORIDA BUILDING CODE. (2017) THE ABOVE ELECTRICAL LAYOUT IS FOR BID PURPOSE ONLY.

200 AMP ELECTRICAL RISER

First Floor Electrical Plan "A,B,C"

(Standard)

SCALE: 1/8" = 1'-0" (11x17) 1/4" = 1'-0" (22x34)

GENERAL NOTES KEY:

1. BUILDER TO VERIFY EXACT LOCATION OF FLOOR OUTLETS IN FIELD.
2. ALL OUTLETS ARE TO BE AFCI PROTECTED.
3. ALL 15A AND 20A 120V BRANCH CIRCUITS WILL BE AFCI PROTECTED.
4. ALL 15A AND 20A 120V BRANCH CIRCUITS LOCATED IN THE GARAGE AND LAUNDRY WILL BE GFCI PROTECTED.
5. ALL GARAGE BAYS WILL HAVE DEDICATED GFCI OUTLET.
6. ALL OUTLETS LOCATED IN THE KITCHEN AND BATHROOMS ARE TO BE GFCI PROTECTED.
7. DW. AND GARBAGE DISPOSAL ARE TO BE GFCI PROTECTED.
8. EXCEPTIONS TO THE GFCI STIPULATION WILL BE ALLOWED ONLY IF ALLOWED PER CURRENT NFPA / NEC.
9. OUTLETS LOCATED IN THE LAUNDRY ARE TO BE GFCI AND AFCI PROTECTED.
10. OUTLETS LOCATED WITHIN 6'-0" OF A WET AREA ARE TO BE GFCI PROTECTED.
11. ALL OUTLETS OVER COUNTERTOPS TO BE 42" A.F.F. (U.N.O.).
12. ALL SMOKE/CARBON MONOXIDE DETECTORS ARE TO BE HARD WIRED, INTERCONNECTED AND AFCI PROTECTED.
13. 8'-0" HEIGHT VANITY LIGHTS IN MASTER BATHROOM AND 7'-0" IN ALL OTHER BATHROOMS.
14. IN AREAS SPECIFIED IN SECTION E3901.1, 125-VOLT, 15- AND 20-AMPERE RECEPTACLES SHALL BE LISTED TAMPER-RESISTANT RECEPTACLES.

NOTES:

- THIS DIAGRAMMATIC PLAN IS INTENDED TO SHOW LIGHTING AND CONVENIENCE OUTLETS ONLY. IT IS THE ELECTRICAL CONTRACTORS RESPONSIBILITY TO VERIFY THE REQUIREMENT AND LOCATIONS OF ALL ELECTRICAL EQUIPMENT, (INCLUDING KITCHEN EQUIPMENT) AND PROVIDE AND INSTALL COMPLETE ELECTRICAL SERVICE AS REQUIRED PER NFPA, NEC, FBC CODES AND ALL REIGNING MUNICIPALITY CODES, STANDARDS AND ORDINANCES.
- LOCATION OF FIXTURES AND / OR OUTLETS ARE SUGGESTED LOCATIONS AND MEET MOST LOCAL CODE REQUIREMENTS. ADDITIONS OR ADJUSTMENTS MAY BE MADE BETWEEN THE OWNER AND BUILDER IN THE FIELD.
- ALL ELECTRICAL WORK AND APPLIANCES ARE IN FULL COMPLIANCE WITH N.F.P.A., N.E.C., F.B.C. 6TH EDITION (2017) RESIDENTIAL, AND ALL APPLICABLE LOCAL STANDARDS, CODES, AND ORDINANCES.
- VARIOUS SYMBOLS ON ELECTRICAL LEGEND MAY OR MAY NOT BE USED ON THIS PLAN.

ELECTRICAL KEY:

	CEILING MOUNTED LIGHT
PC	PULL CHAIN LIGHT
	RECESSED LIGHT
	WALL MOUNTED LIGHT
	WALL WASH RECESSED
	DUPLEX RECEPTACLE
	220 V RECEPTACLE
	1/2 HOT, 1/2 SWITCHED
WP	WATER PROOF RECEPTACLE
	FLOOR RECEPTACLE
	PRE-WIRE FOR CLG. FAN
GFI	GROUND FAULT INTERRUPT
$	WALL SWITCH
$3	3-WAY SWITCH
$D	DIMMER SWITCH
	TELEPHONE JACK
	CABLE JACK
	PRE-WIRE GARAGE DOOR OPENER
	FLUORESCENT LIGHT
	ELECTRICAL PANEL
	CHIME
	DOOR BELL / GARAGE DOOR SWITCH
	DISCONNECT SWITCH
M	ELECTRICAL METER
S.D.	SMOKE DETECTOR
C.M.S.D.	CARBON MONOXIDE / SMOKE DETECTOR
	CEILING FAN
	WALL SCONCE
	CHANDELIER
	SPOT LIGHT
	FLUSH MOUNT FLUORESCENT LIGHT
	FAN / LIGHT COMBINATION
	GARBAGE DISPOSAL MOTOR
S	SPEAKER
J	JUNCTION BOX
L.V.	LOW VOLTAGE
V.P.	VAPOR PROOF
A.F.	ARC FAULT PROTECTION

© COPYRIGHT 2016 PARK SQUARE HOMES HEREBY RESERVES ITS COMMON LAW COPYRIGHTS IN THESE PLANS, IDEAS AND DESIGN. THESE PLANS, IDEAS AND DESIGN ARE NOT TO BE COPIED OR MODIFIED IN ANY MATTER OR FORM WHATSOEVER, NOR ARE THEY TO BE ASSIGNED TO ANY THIRD PARTY WITHOUT FIRST OBTAINING THE EXPRESS WRITTEN PERMISSION FROM PARK SQUARE HOMES.

THOMPSON ENGINEERING GROUP, INC.
4401 Vineland Road Suite A6 Orlando, FL 32811
Ph: (407) 734-1450
Fax: (407) 734-1790
www.tegfl.com

MJS designers group
residential·commercial·architecture
815 Orienta Ave. Suite# 1040
Altamonte Springs, FL. 32701
Ph: (407) 629-6711
Fax: (407) 629-6776
www.mjshomedesigns.com

WRITTEN DIMENSIONS SHALL HAVE PRECEDENCE OVER SCALE DIMENSIONS.
Contractors shall verify all plans, dimensions and conditions of the job and MJS, Inc. must be notified in writing of any changes in the dimensions, conditions and specifications depicting on these plans.

40-2922

LARGO (WS)
Lot # - Subdivision
Street Address
City, State. Zip

A division of Park Square Enterprises Inc.
5200 Vineland Rd. Suite #200
Orlando, Fl. 32811
Phone: (407) 529-3000
Park Square HOMES

ISSUE DATE	08/27/2020
REVISIONS	
PROJECT:	00-0000
SCALE:	AS NOTED
DRAWN BY:	S.B.
DESIGNED BY:	MJS

ELECTRICAL LAYOUT

A7

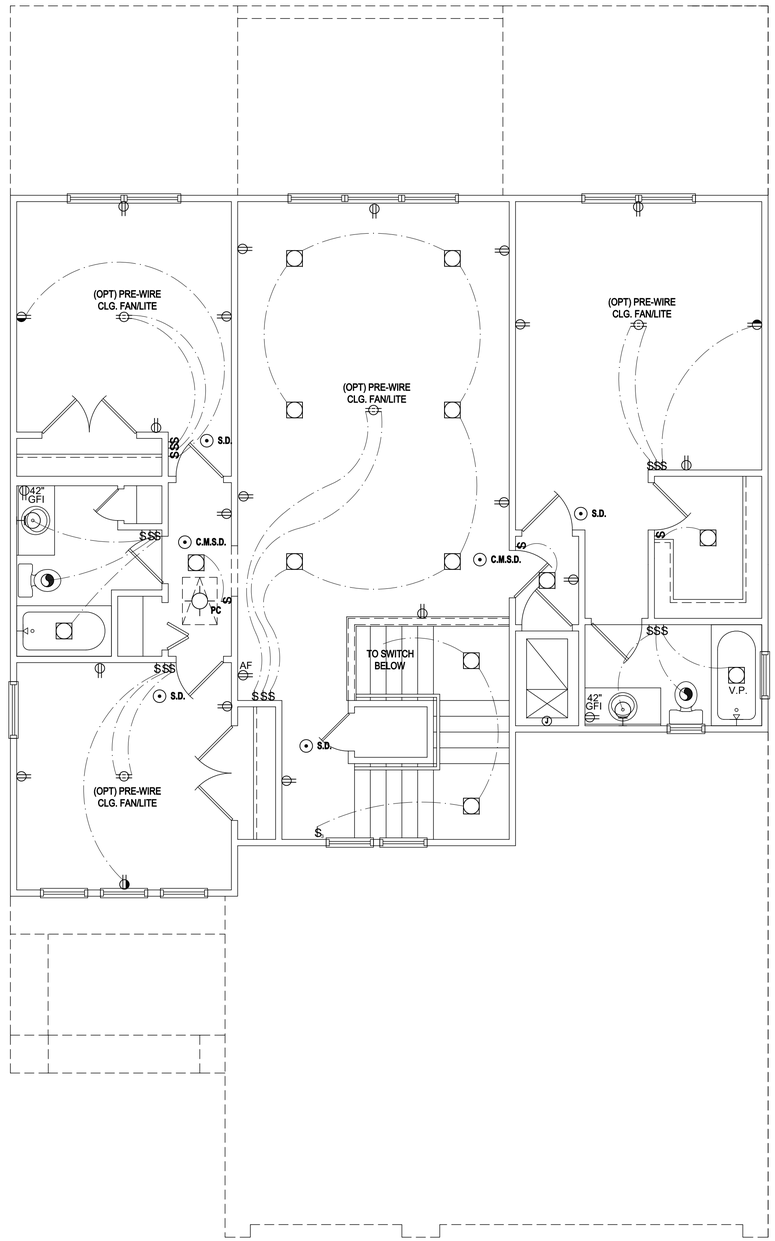

Second Floor Electrical Plan "A"

(Standard)

SCALE: 1/8" = 1'-0" (11x17) 1/4" = 1'-0" (22x34)

GENERAL NOTES KEY:

1. BUILDER TO VERIFY EXACT LOCATION OF FLOOR OUTLETS IN FIELD.
2. ALL OUTLETS ARE TO BE AFCI PROTECTED.
3. ALL 15A AND 20A 120V BRANCH CIRCUITS WILL BE AFCI PROTECTED.
4. ALL 15A AND 20A 120V BRANCH CIRCUITS LOCATED IN THE GARAGE AND LAUNDRY WILL BE GFCI PROTECTED.
5. ALL GARAGE BAYS WILL HAVE DEDICATED GFCI OUTLET.
6. ALL OUTLETS LOCATED IN THE KITCHEN AND BATHROOMS ARE TO BE GFCI PROTECTED.
7. DW. AND GARBAGE DISPOSAL ARE TO BE GFCI PROTECTED.
8. EXCEPTIONS TO THE GFCI STIPULATION WILL BE ALLOWED ONLY IF ALLOWED PER CURRENT NFPA / NEC.
9. OUTLETS LOCATED IN THE LAUNDRY ARE TO BE GFCI AND AFCI PROTECTED.
10. OUTLETS LOCATED WITHIN 6'-0" OF A WET AREA ARE TO BE GFCI PROTECTED.
11. ALL OUTLETS OVER COUNTERTOPS TO BE 42" A.F.F. (U.N.O.).
12. ALL SMOKE/CARBON MONOXIDE DETECTORS ARE TO BE HARD WIRED, INTERCONNECTED AND AFCI PROTECTED.
13. 8'-0" HEIGHT VANITY LIGHTS IN MASTER BATHROOM AND 7'-0" IN ALL OTHER BATHROOMS.
14. IN AREAS SPECIFIED IN SECTION E3901.1, 125-VOLT, 15- AND 20-AMPERE RECEPTACLES SHALL BE LISTED TAMPER-RESISTANT RECEPTACLES.

NOTES:

- THIS DIAGRAMMATIC PLAN IS INTENDED TO SHOW LIGHTING AND CONVENENCE OUTLETS ONLY. IT IS THE ELECTRICAL CONTRACTORS RESPONSIBILITY TO VERIFY THE REQUIREMENT AND LOCATIONS OF ALL ELECTRICAL EQUIPMENT, (INCLUDING KITCHEN EQUIPMENT) AND PROVIDE AND INSTALL COMPLETE ELECTRICAL SERVICE AS REQUIRED PER NFPA, NEC, FBC CODES AND ALL REIGNING MUNICIPALITY CODES, STANDARDS AND ORDINANCES.
- LOCATION OF FIXTURES AND / OR OUTLETS ARE SUGGESTED LOCATIONS AND MEET MOST LOCAL CODE REQUIREMENTS. ADDITIONS OR ADJUSTMENTS MAY BE MADE BETWEEN THE OWNER AND BUILDER IN THE FIELD.
- ALL ELECTRICAL WORK AND APPLIANCES ARE IN FULL COMPLIANCE WITH N.F.P.A., N.E.C., F.B.C. 6TH EDITION (2017) RESIDENTIAL, AND ALL APPLICABLE LOCAL STANDARDS, CODES, AND ORDINANCES.
- VARIOUS SYMBOLS ON ELECTRICAL LEGEND MAY OR MAY NOT BE USED ON THIS PLAN.

ELECTRICAL KEY:

	CEILING MOUNTED LIGHT
PC	PULL CHAIN LIGHT
	RECESSED LIGHT
	WALL MOUNTED LIGHT
	WALL WASH RECESSED
	DUPLEX RECEPTACLE
	220 V RECEPTACLE
	1/2 HOT, 1/2 SWITCHED
WP	WATER PROOF RECEPTACLE
	FLOOR RECEPTACLE
	PRE-WIRE FOR CLG. FAN
GFI	GROUND FAULT INTERRUPT
$	WALL SWITCH
$3	3-WAY SWITCH
$D	DIMMER SWITCH
	TELEPHONE JACK
	CABLE JACK
	PRE-WIRE GARAGE DOOR OPENER
	FLUORESCENT LIGHT
	ELECTRICAL PANEL
	CHIME
	DOOR BELL / GARAGE DOOR SWITCH
	DISCONNECT SWITCH
M	ELECTRICAL METER
S.D.	SMOKE DETECTOR
C.M.S.D.	CARBON MONOXIDE / SMOKE DETECTOR
	CEILING FAN
	WALL SCONCE
	CHANDELIER
	SPOT LIGHT
	FLUSH MOUNT FLUORESCENT LIGHT
	FAN / LIGHT COMBINATION
	GARBAGE DISPOSAL MOTOR
S	SPEAKER
J	JUNCTION BOX
L.V.	LOW VOLTAGE
V.P.	VAPOR PROOF
A.F.	ARC FAULT PROTECTION

© COPYRIGHT 2016 PARK SQUARE HOMES HEREBY RESERVES ITS COMMON LAW COPYRIGHTS IN THESE PLANS, IDEAS AND DESIGNS. THESE PLANS, IDEAS AND DESIGNS ARE NOT TO BE COPIED OR MODIFIED IN ANY MANNER OR FORM WHATSOEVER, NOR ARE THEY TO BE ASSIGNED TO ANY THIRD PARTY, WITHOUT FIRST OBTAINING THE EXPRESS WRITTEN PERMISSION FROM PARK SQUARE HOMES.

THOMPSON ENGINEERING GROUP, INC.
4401 Vineland Road Suite A6 Orlando, FL 32811
Ph: (407) 734-1450
Fax: (407) 734-1790
www.tegfl.com

815 Orienta Ave. Suite# 1040
Altamonte Springs, FL. 32701
Ph: (407) 629-6711
Fax: (407) 629-6776
www.mjshomedesigns.com

MJS designers group
residential-commercial-architecture

WRITTEN DIMENSIONS SHALL HAVE PRECEDENCE OVER SCALE DIMENSIONS.
Contractors shall verify and be responsible for all dimensions and conditions of the job and MJS, Inc. must be notified in writing of any changes in the dimensions, conditions and specifications appearing on these plans.

40-2922

LARGO (WS)
Lot # - Subdivision
Street Address
City, State, Zip

A division of Park Square Enterprises Inc.
5200 Vineland Rd. Suite #200
Orlando, Fl. 32811
Phone: (407) 529-3000

Park Square HOMES

ISSUE DATE	08/27/2020
REVISIONS	
PROJECT:	00-0000
SCALE:	AS NOTED
DRAWN BY:	S.B.
DESIGNED BY:	MJS

ELECTRICAL LAYOUT

A8.A

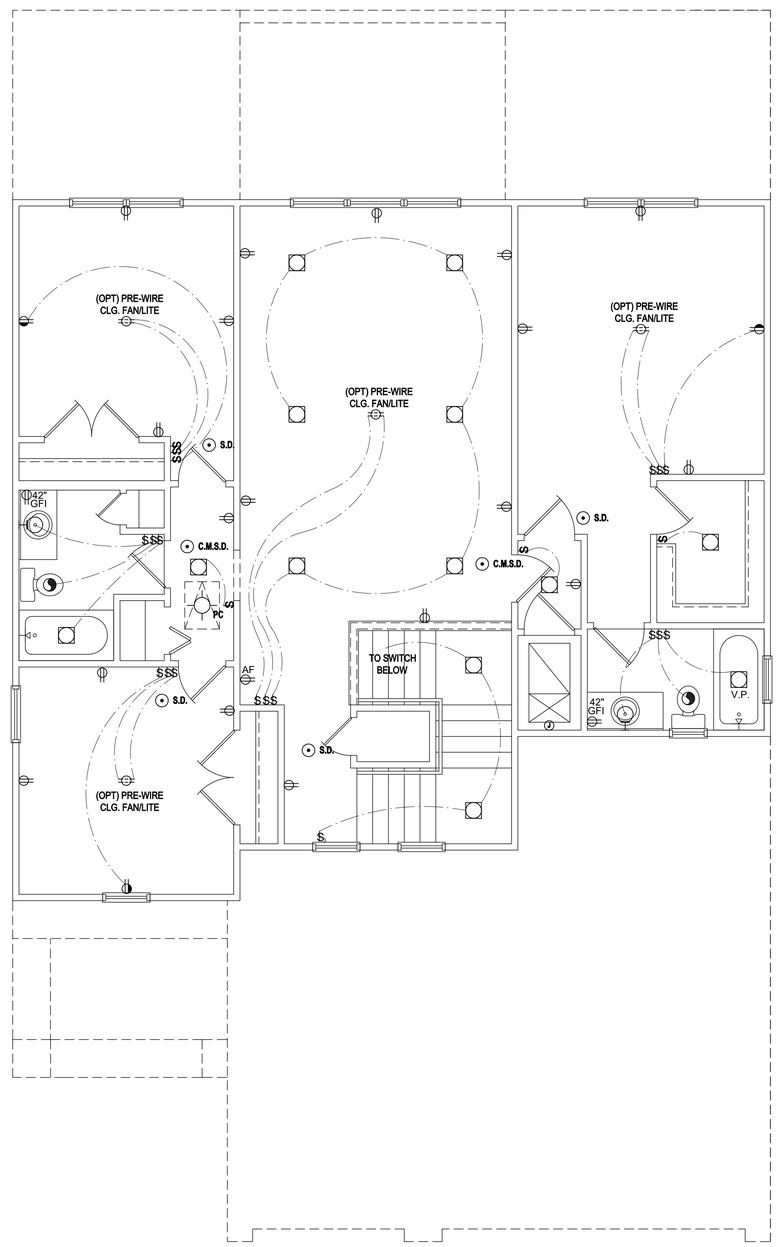

Second Floor Electrical Plan "B"

(Standard)

SCALE: 1/8" = 1'-0" (11x17) 1/4" = 1'-0" (22x34)

GENERAL NOTES KEY:

1. BUILDER TO VERIFY EXACT LOCATION OF FLOOR OUTLETS IN FIELD.
2. ALL OUTLETS ARE TO BE AFCI PROTECTED.
3. ALL 15A AND 20A 120V BRANCH CIRCUITS WILL BE AFCI PROTECTED.
4. ALL 15A AND 20A 120V BRANCH CIRCUITS LOCATED IN THE GARAGE AND LAUNDRY WILL BE GFCI PROTECTED.
5. ALL GARAGE BAYS WILL HAVE DEDICATED GFCI OUTLET.
6. ALL OUTLETS LOCATED IN THE KITCHEN AND BATHROOMS ARE TO BE GFCI PROTECTED.
7. DW. AND GARBAGE DISPOSAL ARE TO BE GFCI PROTECTED.
8. EXCEPTIONS TO THE GFCI STIPULATION WILL BE ALLOWED ONLY IF ALLOWED PER CURRENT NFPA / NEC.
9. OUTLETS LOCATED IN THE LAUNDRY ARE TO BE GFCI AND AFCI PROTECTED.
10. OUTLETS LOCATED WITHIN 6'-0" OF A WET AREA ARE TO BE GFCI PROTECTED.
11. ALL OUTLETS OVER COUNTERTOPS TO BE 42" A.F.F. (U.N.O.).
12. ALL SMOKE/CARBON MONOXIDE DETECTORS ARE TO BE HARD WIRED, INTERCONNECTED AND AFCI PROTECTED.
13. 8'-0" HEIGHT VANITY LIGHTS IN MASTER BATHROOM AND 7'-0" IN ALL OTHER BATHROOMS.
14. IN AREAS SPECIFIED IN SECTION E3901.1, 125-VOLT, 15- AND 20-AMPERE RECEPTACLES SHALL BE LISTED TAMPER-RESISTANT RECEPTACLES.

NOTES:

- THIS DIAGRAMMATIC PLAN IS INTENDED TO SHOW LIGHTING AND CONVENENCE OUTLETS ONLY. IT IS THE ELECTRICAL CONTRACTORS RESPONSIBILITY TO VERIFY THE REQUIREMENT AND LOCATIONS OF ALL ELECTRICAL EQUIPMENT, (INCLUDING KITCHEN EQUIPMENT) AND PROVIDE AND INSTALL COMPLETE ELECTRICAL SERVICE AS REQUIRED PER NFPA, NEC, FBC CODES AND ALL REIGNING MUNICIPALITY CODES, STANDARDS AND ORDINANCES.
- LOCATION OF FIXTURES AND / OR OUTLETS ARE SUGGESTED LOCATIONS AND MEET MOST LOCAL CODE REQUIREMENTS. ADDITIONS OR ADJUSTMENTS MAY BE MADE BETWEEN THE OWNER AND BUILDER IN THE FIELD.
- ALL ELECTRICAL WORK AND APPLIANCES ARE IN FULL COMPLIANCE WITH N.F.P.A., N.E.C., F.B.C. 6TH EDITION (2017) RESIDENTIAL, AND ALL APPLICABLE LOCAL STANDARDS, CODES, AND ORDINANCES.
- VARIOUS SYMBOLS ON ELECTRICAL LEGEND MAY OR MAY NOT BE USED ON THIS PLAN.

ELECTRICAL KEY:

	CEILING MOUNTED LIGHT
PC	PULL CHAIN LIGHT
	RECESSED LIGHT
	WALL MOUNTED LIGHT
	WALL WASH RECESSED
	DUPLEX RECEPTACLE
	220 V RECEPTACLE
	1/2 HOT, 1/2 SWITCHED
WP	WATER PROOF RECEPTACLE
	FLOOR RECEPTACLE
	PRE-WIRE FOR CLG. FAN
GFI	GROUND FAULT INTERRUPT
$	WALL SWITCH
$3	3-WAY SWITCH
$D	DIMMER SWITCH
	TELEPHONE JACK
	CABLE JACK
	PRE-WIRE GARAGE DOOR OPENER
	FLUORESCENT LIGHT
	ELECTRICAL PANEL
	CHIME
	DOOR BELL / GARAGE DOOR SWITCH
	DISCONNECT SWITCH
M	ELECTRICAL METER
S.D.	SMOKE DETECTOR
C.M.S.D.	CARBON MONOXIDE / SMOKE DETECTOR
	CEILING FAN
	WALL SCONCE
	CHANDELIER
	SPOT LIGHT
	FLUSH MOUNT FLUORESCENT LIGHT
	FAN / LIGHT COMBINATION
	GARBAGE DISPOSAL MOTOR
S	SPEAKER
J	JUNCTION BOX
L.V.	LOW VOLTAGE
V.P.	VAPOR PROOF
A.F.	ARC FAULT PROTECTION

THOMPSON ENGINEERING GROUP, INC.
4401 Vineland Road Suite A6 Orlando, FL 32811
Ph: (407)734-1450
Fax: (407) 734-1790
www.tegfl.com

815 Orienta Ave. Suite# 1040
Altamonte Springs, FL. 32701
Ph: (407) 629-6711
Fax: (407) 629-6776
www.mjshomedesigns.com

WRITTEN DIMENSIONS SHALL HAVE PRECEDENCE OVER SCALE DIMENSIONS.
Contractors shall verify and be responsible for all dimensions and conditions of the job and M.J.S., Inc. must be notified in writing of any changes in the dimensions, conditions and specifications appearing on these plans.

MJS designers group
residential-commercial-architecture

40-2922

LARGO (WS)
Lot # - Subdivision
Street Address
City, State. Zip

A division of Park Square Enterprises Inc.
5200 Vineland Rd. Suite #200
Orlando, Fl. 32811
Phone: (407) 529-3000

Park Square HOMES

ISSUE DATE	08/27/2020
REVISIONS	
PROJECT:	00-0000
SCALE:	AS NOTED
DRAWN BY:	S.B.
DESIGNED BY:	MJS

ELECTRICAL LAYOUT

A8.B

© COPYRIGHT 2016 PARK SQUARE HOMES HEREBY RESERVES ITS COMMON LAW COPYRIGHTS IN THESE PLANS, IDEAS AND DESIGN. THESE PLANS, IDEAS AND DESIGNS ARE NOT TO BE COPIED OR MODIFIED IN ANY MANNER OR FORM WHATSOEVER, NOR ARE THEY TO BE ASSIGNED TO ANY THIRD PARTY WITHOUT FIRST OBTAINING THE EXPRESS WRITTEN PERMISSION FROM PARK SQUARE HOMES.

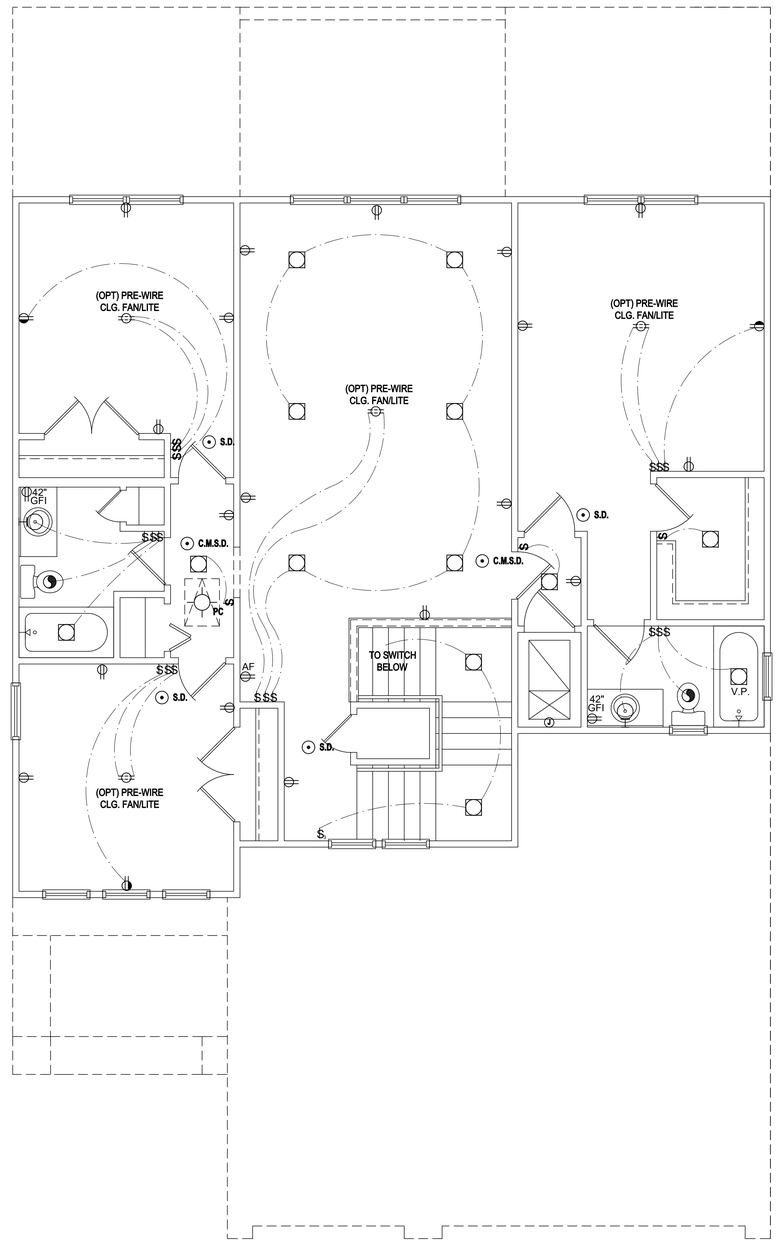

Second Floor Electrical Plan "C"

(Standard)

SCALE: 1/8" = 1'-0" (11x17) 1/4" = 1'-0" (22x34)

GENERAL NOTES KEY:

1. BUILDER TO VERIFY EXACT LOCATION OF FLOOR OUTLETS IN FIELD.
2. ALL OUTLETS ARE TO BE AFCI PROTECTED.
3. ALL 15A AND 20A 120V BRANCH CIRCUITS WILL BE AFCI PROTECTED.
4. ALL 15A AND 20A 120V BRANCH CIRCUITS LOCATED IN THE GARAGE AND LAUNDRY WILL BE GFCI PROTECTED.
5. ALL GARAGE BAYS WILL HAVE DEDICATED GFCI OUTLET.
6. ALL OUTLETS LOCATED IN THE KITCHEN AND BATHROOMS ARE TO BE GFCI PROTECTED.
7. DW. AND GARBAGE DISPOSAL ARE TO BE GFCI PROTECTED.
8. EXCEPTIONS TO THE GFCI STIPULATION WILL BE ALLOWED ONLY IF ALLOWED PER CURRENT NFPA / NEC.
9. OUTLETS LOCATED IN THE LAUNDRY ARE TO BE GFCI AND AFCI PROTECTED.
10. OUTLETS LOCATED WITHIN 6'-0" OF A WET AREA ARE TO BE GFCI PROTECTED.
11. ALL OUTLETS OVER COUNTERTOPS TO BE 42" A.F.F. (U.N.O.).
12. ALL SMOKE/CARBON MONOXIDE DETECTORS ARE TO BE HARD WIRED, INTERCONNECTED AND AFCI PROTECTED.
13. 8'-0" HEIGHT VANITY LIGHTS IN MASTER BATHROOM AND 7'-0" IN ALL OTHER BATHROOMS.
14. IN AREAS SPECIFIED IN SECTION E3901.1, 125-VOLT, 15- AND 20-AMPERE RECEPTACLES SHALL BE LISTED TAMPER-RESISTANT RECEPTACLES.

NOTES:

- THIS DIAGRAMMATIC PLAN IS INTENDED TO SHOW LIGHTING AND CONVENENCE OUTLETS ONLY. IT IS THE ELECTRICAL CONTRACTORS RESPONSIBILITY TO VERIFY THE REQUIREMENT AND LOCATIONS OF ALL ELECTRICAL EQUIPMENT, (INCLUDING KITCHEN EQUIPMENT) AND PROVIDE AND INSTALL COMPLETE ELECTRICAL SERVICE AS REQUIRED PER NFPA, NEC, FBC CODES AND ALL REIGNING MUNICIPALITY CODES, STANDARDS AND ORDINANCES.
- LOCATION OF FIXTURES AND / OR OUTLETS ARE SUGGESTED LOCATIONS AND MEET MOST LOCAL CODE REQUIREMENTS. ADDITIONS OR ADJUSTMENTS MAY BE MADE BETWEEN THE OWNER AND BUILDER IN THE FIELD.
- ALL ELECTRICAL WORK AND APPLIANCES ARE IN FULL COMPLIANCE WITH N.F.P.A., N.E.C., F.B.C. 6TH EDITION (2017) RESIDENTIAL, AND ALL APPLICABLE LOCAL STANDARDS, CODES, AND ORDINANCES.
- VARIOUS SYMBOLS ON ELECTRICAL LEGEND MAY OR MAY NOT BE USED ON THIS PLAN.

ELECTRICAL KEY:

	CEILING MOUNTED LIGHT
PC	PULL CHAIN LIGHT
	RECESSED LIGHT
	WALL MOUNTED LIGHT
	WALL WASH RECESSED
	DUPLEX RECEPTACLE
	220 V RECEPTACLE
	1/2 HOT, 1/2 SWITCHED
WP	WATER PROOF RECEPTACLE
	FLOOR RECEPTACLE
	PRE-WIRE FOR CLG. FAN
GFI	GROUND FAULT INTERRUPT
$	WALL SWITCH
$3	3-WAY SWITCH
$D	DIMMER SWITCH
	TELEPHONE JACK
	CABLE JACK
	PRE-WIRE GARAGE DOOR OPENER
	FLUORESCENT LIGHT
	ELECTRICAL PANEL
	CHIME
	DOOR BELL / GARAGE DOOR SWITCH
	DISCONNECT SWITCH
M	ELECTRICAL METER
S.D.	SMOKE DETECTOR
C.M.S.D.	CARBON MONOXIDE / SMOKE DETECTOR
	CEILING FAN
	WALL SCONCE
	CHANDELIER
	SPOT LIGHT
	FLUSH MOUNT FLUORESCENT LIGHT
	FAN / LIGHT COMBINATION
	GARBAGE DISPOSAL MOTOR
S	SPEAKER
J	JUNCTION BOX
L.V.	LOW VOLTAGE
V.P.	VAPOR PROOF
A.F.	ARC FAULT PROTECTION

THOMPSON ENGINEERING GROUP, INC.
4401 Vineland Road Suite A6 Orlando, FL 32811
Ph: (407) 734-1450
Fax: (407) 734-1790
www.tegfl.com

815 Orienta Ave. Suite# 1040
Altamonte Springs, FL. 32701
Ph: (407) 629-6711
Fax: (407) 629-6776
www.mjshomedesigns.com

WRITTEN DIMENSIONS SHALL HAVE PRECEDENCE OVER SCALE DIMENSIONS.
Contractors shall verify and be responsible for all dimensions and conditions of the job and M.J.S., Inc. must be notified in writing of any changes in the dimensions, conditions and specifications appearing on these plans.

MJS designers group
residential-commercial-architecture

40-2922

LARGO (WS)
Lot # - Subdivision
Street Address
City, State. Zip

A division of Park Square Enterprises Inc.
5200 Vineland Rd. Suite #200
Orlando, Fl. 32811
Phone: (407) 529-3000

Park Square HOMES

ISSUE DATE	08/27/2020
REVISIONS	
PROJECT:	00-0000
SCALE:	AS NOTED
DRAWN BY:	S.B.
DESIGNED BY:	MJS

ELECTRICAL LAYOUT

A8.C

© COPYRIGHT 2016 PARK SQUARE HOMES HEREBY RESERVES ITS COMMON LAW COPYRIGHTS IN THESE PLANS, IDEAS AND DESIGN. THESE PLANS, IDEAS AND DESIGNS ARE NOT TO BE COPIED OR MODIFIED IN ANY MANNER OR FORM WHATSOEVER, NOR ARE THEY TO BE ASSIGNED TO ANY THIRD PARTY WITHOUT FIRST OBTAINING THE EXPRESS WRITTEN PERMISSION FROM PARK SQUARE HOMES.

FIELD REPAIR NOTES

(1) MISSED FOOTING DOWELS MAY BE SUBSTITUTED W/ A STRAIGHT #5 REBAR SET IN A 3/4" DIA. x 6" DEEP HOLE FILLED W/ UNITEX PROPOXY 300 OR SIMPSON SET OR ETF ADHESIVES.

(2) BLOCK WALL OVERHANGING SLAB CONDITION:
UP TO 7/8" - NO REPAIR NECESSARY
7/8" TO 1¼" - ADD FILLED CELL (NO VERTICAL STEEL) MIDPOINT OF WALL BETWEEN EXISTING FILLED CELLS (WITH STEEL) IN AREAS AFFECTED
1¼"+ - REQUIRE SPECIAL ENGINEERING LETTER

(3) PENETRATION OF PLUMBING PIPES/DRYER VENTS THRU PLATES OF A LOAD BEARING WALL MAY OCCUR PROVIDED DBL. STUDS ARE ADDED ON EITHER SIDE OF PENETRATION WITHIN 3" AND TRUSS/FLOOR TRUSS IS NO CLOSER THAN 3" FROM PENETRATION. ADD (1) MTS12 @ TOP AND BOTTOM PLATE

FOUNDATION NOTES

1. CONTRACTOR VERIFY ALL DIMENSIONS ON J05 SITE.
2. ■ DENOTES FILL CELL REINF. W/ CONC. W/ 1- #5 REBAR. GRADE 60.
   ▣ DENOTES FILL CELL RE NE_ W/ CONC. W/ 2-#5 REBAR. GRADE 60
3. DO NOT SCALE PRINTS! CONSTRUCTION TO BE FROM CALCULATED DIMENSIONS ONLY. ANY DISCREPANCIES OR ERRORS TO BE REPORTED PROMPTLY TO SUPER-VISOR FOR CLARIFICATION.
4. WATER HEATER T&P RELIEF VALVE SHALL E FULL SIZE TO EXTERIOR. WATER HEATER AT OR ABOVE FLOOR LEVEL 61-FALL E IN A FAN WITH DRAIN TO EXTERIOR. WATER HEATER SHALL HAVE AFFROVED THERMAL EXPANSION DEVICE
5. PAVERS MAY BE USED ILO CONCRETE SLABS IN PATIO, PORCH, DRIVE AND WALKWAY AREAS. DELETE SLAB IN AREAS PAVERS ARE USED.
6. MECHANICAL EQUIP. LOCATIONS WILL BE DETERMINED BY COMMUNITY AND COUNTY CODES.
7. IN LIEU OF TREATING THE SOIL, AN ALTERNATIVE TO TERMITE TREATED SOIL CA BE PREMISE 75 WP TERMICIDE.
8. BORA -CARE TO BE APPLIED ON INTERIOR WALLS W/ MANUFACTURER'S INSTRUCTIONS AND SPECIFICATIONS, PURSUANT FLORIDA BUILDING CODE LATEST EDITION.

VERIFICATION OF FIELD CONDITIONS:

CONTRACTOR SHALL VERIFY ALL FIELD CONDITIONS AND DIMENSIONS RELATIVE TO SAME. WHERE THERE ARE CONFLICTS BETWEEN ACTUAL FIELD CONDITIONS AND DATA PRESENTED IN THE DRAWINGS, SUCH CONDITIONS SHALL BE CALLED TO THE ARCHITECT'S AND OR TO THE ENGINEER OF RECORD'S (EOR) ATTENTION AND NECESSARY ADJUSTMENTS MADE PER THEIR INSTRUCTIONS.

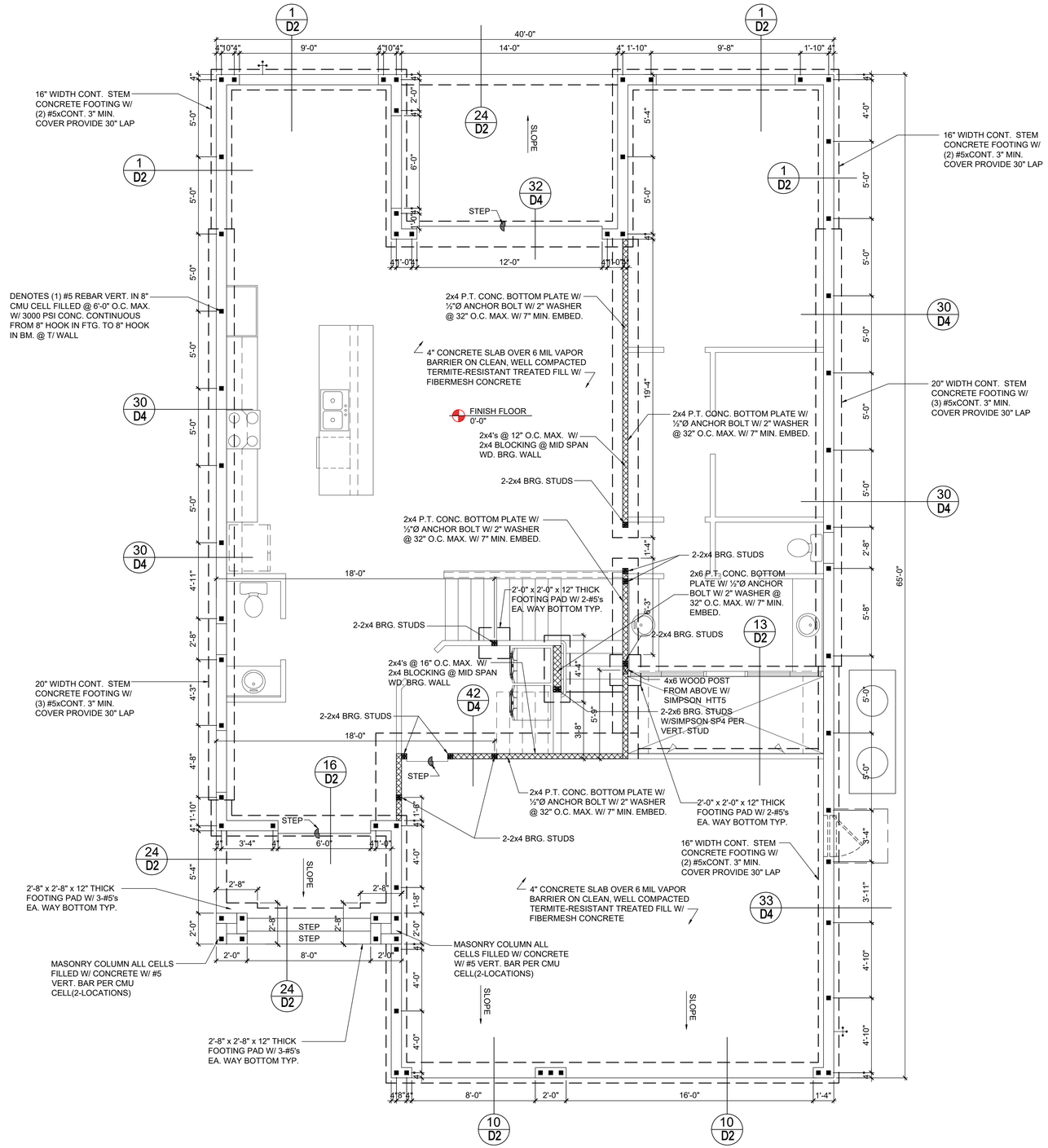

FOUNDATION PLAN
A (STANDARD)
1/8"=1'-0" (11x17) 1/4"=1'-0" (22x34)

THOMPSON ENGINEERING GROUP, INC.
4401 Vineland Road Suite A6 Orlando, FL 32811
Ph: (407) 734-1450
Fax: (407) 734-1790
www.tegfl.com

815 Orienta Ave. Suite# 1040
Altamonte Springs, FL. 32701
Ph: (407) 629-6711
Fax: (407) 629-6776
www.mjshomedesigns.com

WRITTEN DIMENSIONS SHALL HAVE PRECEDENCE OVER SCALE DIMENSIONS.
Contractors shall verify and be responsible for all dimensions and conditions of the job and MJS, Inc. must be notified in writing of any changes in the dimensions, conditions and specifications appearing on these plans.

MJS designers group
residential•commercial•architecture

40-2922

LARGO (WS)
Lot # - Subdivision
Street Address
City, State. Zip

A division of Park Square Enterprises Inc.
5200 Vineland Rd. Suite #200
Orlando, Fl. 32811
Phone: (407) 529-3000

Park Square HOMES

ISSUE DATE	08/27/2020
REVISIONS	
PROJECT:	00-0000
SCALE:	AS NOTED
DRAWN BY:	S.B.
DESIGNED BY:	MJS

FOUNDATION PLAN A(STANDARD)

S1.A

© COPYRIGHT 2016 PARK SQUARE HOMES HEREBY RESERVES ITS COMMON LAW COPYRIGHTS IN THESE PLANS, IDEAS AND DESIGNS. THESE PLANS, IDEAS AND DESIGNS ARE NOT TO BE COPIED OR MODIFIED IN ANY MATTER OR FORM WHATSOEVER, NOR ARE THEY TO BE ASSIGNED TO ANY THIRD PARTY WITHOUT FIRST OBTAINING THE EXPRESS WRITTEN PERMISSION FROM PARK SQUARE HOMES.

FIELD REPAIR NOTES

(1) MISSED FOOTING DOWELS MAY BE SUBSTITUTED W/ A STRAIGHT #5 REBAR SET IN A 3/4" DIA. x 6" DEEP HOLE FILLED W/ UNITEX PROPOXY 300 OR SIMPSON SET OR ETF ADHESIVES.
(2) BLOCK WALL OVERHANGING SLAB CONDITION:
UP TO 7/8" - NO REPAIR NECESSARY
7/8" TO 1¼" - ADD FILLED CELL (NO VERTICAL STEEL) MIDPOINT OF WALL BETWEEN EXISTING FILLED CELLS (WITH STEEL) IN AREAS AFFECTED
1¼"+ - REQUIRE SPECIAL ENGINEERING LETTER
(3) PENETRATION OF PLUMBING PIPES/DRYER VENTS THRU PLATES OF A LOAD BEARING WALL MAY OCCUR PROVIDED DBL. STUDS ARE ADDED ON EITHER SIDE OF PENETRATION WITHIN 3" AND TRUSS/FLOOR TRUSS IS NO CLOSER THAN 3" FROM PENETRATION. ADD (1) MTS12 @ TOP AND BOTTOM PLATE

FOUNDATION NOTES

1. CONTRACTOR VERIFY ALL DIMENSIONS ON J05 SITE.
2. ■ DENOTES FILL CELL REINF. W/ CONC. W/ 1- #5 REBAR. GRADE 6O.
   ▣ DENOTES FILL CELL RE NE_ W/ CONC. W/ 2-#5 REBAR. GRADE 60
3. DO NOT SCALE PRINTS! CONSTRUCTION TO BE FROM CALCULATED DIMENSIONS ONLY. ANY DISCREPANCIES OR ERRORS TO BE REPORTED PROMPTLY TO SUPER-VISOR FOR CLARIFICATION.
4. WATER HEATER T&P RELIEF VALVE SHALL E FULL SIZE TO EXTERIOR. WATER HEATER AT OR ABOVE FLOOR LEVEL 61-FALL E IN A FAN WITH DRAIN TO EXTERIOR. WATER HEATER SHALL HAVE AFFROVED THERMAL EXPANSION DEVICE
5. PAVERS MAY BE USED ILO CONCRETE SLABS IN PATIO, PORCH, DRIVE AND WALKWAY AREAS. DELETE SLAB IN AREAS PAVERS ARE USED.
6. MECHANICAL EQUIP. LOCATIONS WILL BE DETERMINED BY COMMUNITY AND COUNTY CODES.
7. IN LIEU OF TREATING THE SOIL, AN ALTERNATIVE TO TERMITE TREATED SOIL CA BE PREMISE 75 WP TERMICIDE.
8. BORA -CARE TO BE APPLIED ON INTERI0R WALLS W/ MANUFACTURER'S INSTRUCTIONS AND SPECIFICATIONS, PURSUANT FLORIDA BUILDING CODE LATEST EDITION.

VERIFICATION OF FIELD CONDITIONS:

CONTRACTOR SHALL VERIFY ALL FIELD CONDITIONS AND DIMENSIONS RELATIVE TO SAME. WHERE THERE ARE CONFLICTS BETWEEN ACTUAL FIELD CONDITIONS AND DATA PRESENTED IN THE DRAWINGS, SUCH CONDITIONS SHALL BE CALLED TO THE ARCHITECT'S AND OR TO THE ENGINEER OF RECORD'S (EOR) ATTENTION AND NECESSARY ADJUSTMENTS MADE PER THEIR INSTRUCTIONS.

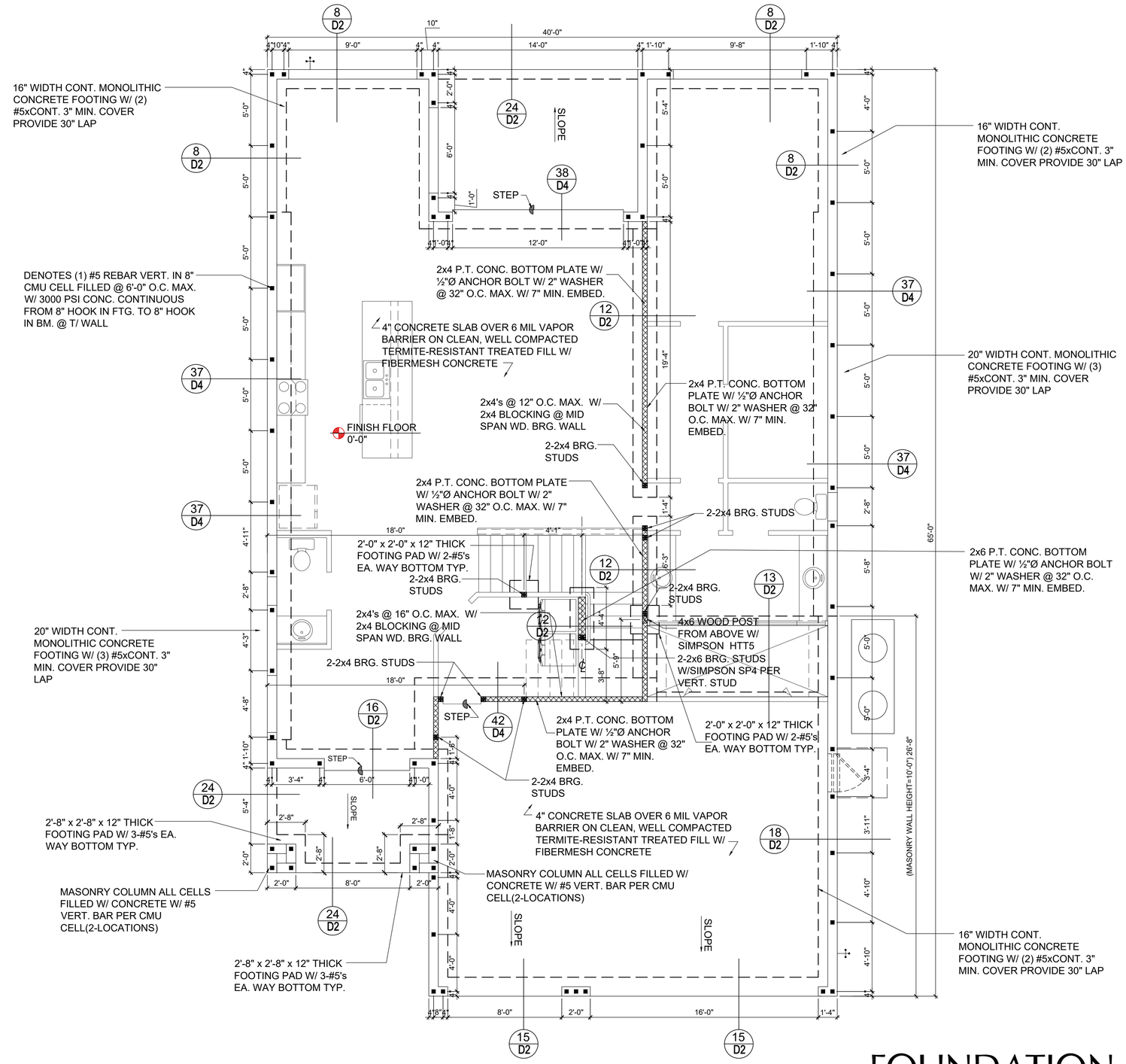

FOUNDATION PLAN

A (STANDARD)

1/8"=1'-0" (11x17) 1/4"=1'-0" (22x34)

THOMPSON ENGINEERING GROUP, INC.
4401 Vineland Road Suite A6 Orlando, FL 32811
Ph: (407) 734-1450
Fax: (407) 734-1790
www.tegfl.com

MJS designers group
residential·commercial·architecture
815 Orienta Ave. Suite# 1040
Altamonte Springs, FL. 32701
Ph: (407) 629-6711
Fax: (407) 629-6776
www.mjshomedesigns.com

WRITTEN DIMENSIONS SHALL HAVE PRECEDENCE OVER SCALE DIMENSIONS.
Contractors shall verify and be responsible for all dimensions and conditions of the job and MJS, Inc. must be notified in writing of any changes in the dimensions, conditions and specifications appearing on these plans.

40-2922

LARGO (WS)
Lot # - Subdivision
Street Address
City, State. Zip

A division of Park Square Enterprises Inc.
5200 Vineland Rd. Suite #200
Orlando, Fl. 32811
Phone: (407) 529-3000

Park Square HOMES

ISSUE DATE	08/27/2020
REVISIONS	
PROJECT:	00-0000
SCALE:	AS NOTED
DRAWN BY:	S.B.
DESIGNED BY:	MJS

FOUNDATION PLAN A(STANDARD)

S1.A

© COPYRIGHT 2016 PARK SQUARE HOMES HEREBY RESERVES ITS COMMON LAW COPYRIGHTS IN THESE PLANS, IDEAS AND DESIGN. THESE PLANS, IDEAS AND DESIGN ARE NOT TO BE COPIED OR MODIFIED IN ANY MATTER OR FORM WHATSOEVER, NOR ARE THEY TO BE ASSIGNED TO ANY THIRD PARTY WITHOUT FIRST OBTAINING THE EXPRESS WRITTEN PERMISSION FROM PARK SQUARE HOMES.

FIELD REPAIR NOTES

(1) MISSED FOOTING DOWELS MAY BE SUBSTITUTED W/ A STRAIGHT #5 REBAR SET IN A 3/4" DIA. x 6" DEEP HOLE FILLED W/ UNITEX PROPOXY 300 OR SIMPSON SET OR ETF ADHESIVES.

(2) BLOCK WALL OVERHANGING SLAB CONDITION:
UP TO 7/8" - NO REPAIR NECESSARY
7/8" TO 1¼" - ADD FILLED CELL (NO VERTICAL STEEL) MIDPOINT OF WALL BETWEEN EXISTING FILLED CELLS (WITH STEEL) IN AREAS AFFECTED
1¼"+ - REQUIRE SPECIAL ENGINEERING LETTER

(3) PENETRATION OF PLUMBING PIPES/DRYER VENTS THRU PLATES OF A LOAD BEARING WALL MAY OCCUR PROVIDED DBL. STUDS ARE ADDED ON EITHER SIDE OF PENETRATION WITHIN 3" AND TRUSS/FLOOR TRUSS IS NO CLOSER THAN 3" FROM PENETRATION. ADD (1) MTS12 @ TOP AND BOTTOM PLATE

FOUNDATION NOTES

1. CONTRACTOR VERIFY ALL DIMENSIONS ON J05 SITE.
2. ■ DENOTES FILL CELL REINF. W/ CONC. W/ 1- #5 REBAR. GRADE 6O.
   ▣ DENOTES FILL CELL RE NE_ W/ CONC. W/ 2-#5 REBAR. GRADE 60
3. DO NOT SCALE PRINTS! CONSTRUCTION TO BE FROM CALCULATED DIMENSIONS ONLY. ANY DISCREPANCIES OR ERRORS TO BE REPORTED PROMPTLY TO SUPER-VISOR FOR CLARIFICATION.
4. WATER HEATER T&P RELIEF VALVE SHALL E FULL SIZE TO EXTERIOR. WATER HEATER AT OR ABOVE FLOOR LEVEL 61-FALL E IN A FAN WITH DRAIN TO EXTERIOR. WATER HEATER SHALL HAVE AFFROVED THERMAL EXPANSION DEVICE
5. PAVERS MAY BE USED ILO CONCRETE SLABS IN PATIO, PORCH, DRIVE AND WALKWAY AREAS. DELETE SLAB IN AREAS PAVERS ARE USED.
6. MECHANICAL EQUIP. LOCATIONS WILL BE DETERMINED BY COMMUNITY AND COUNTY CODES.
7. IN LIEU OF TREATING THE SOIL, AN ALTERNATIVE TO TERMITE TREATED SOIL CA BE PREMISE 75 WP TERMICIDE.
8. BORA -CARE TO BE APPLIED ON INTERI0R WALLS W/ MANUFACTURER'S INSTRUCTIONS AND SPECIFICATIONS, PURSUANT FLORIDA BUILDING CODE LATEST EDITION.

VERIFICATION OF FIELD CONDITIONS:

CONTRACTOR SHALL VERIFY ALL FIELD CONDITIONS AND DIMENSIONS RELATIVE TO SAME. WHERE THERE ARE CONFLICTS BETWEEN ACTUAL FIELD CONDITIONS AND DATA PRESENTED IN THE DRAWINGS, SUCH CONDITIONS SHALL BE CALLED TO THE ARCHITECT'S AND OR TO THE ENGINEER OF RECORD'S (EOR) ATTENTION AND NECESSARY ADJUSTMENTS MADE PER THEIR INSTRUCTIONS.

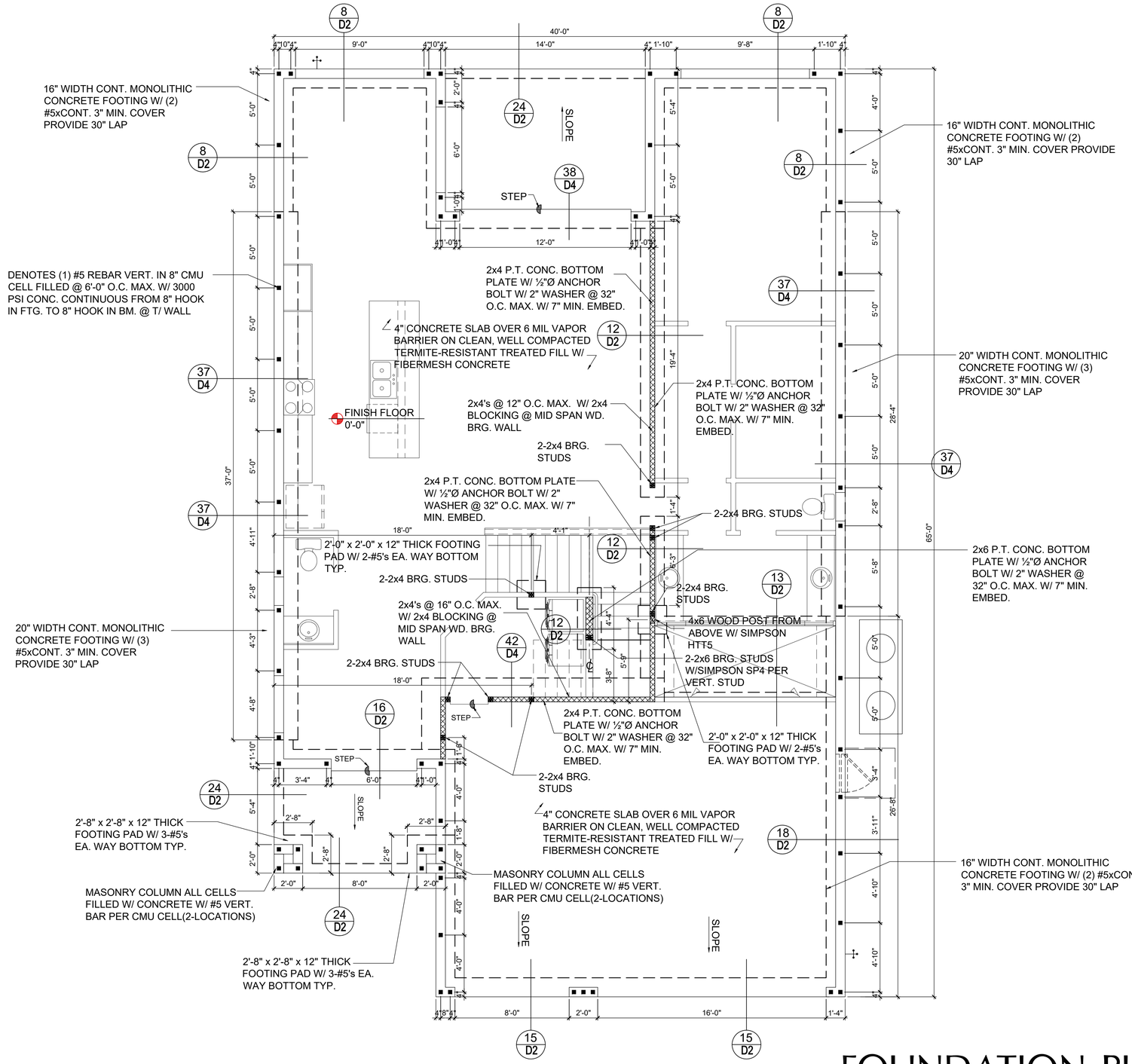

FOUNDATION PLAN

B (STANDARD)

1/8"=1'-0" (11x17) 1/4"=1'-0" (22x34)

THOMPSON ENGINEERING GROUP, INC.
4401 Vineland Road Suite A6 Orlando, FL 32811
Ph: (407) 734-1450
Fax: (407) 734-1790
www.tegfl.com

815 Orienta Ave. Suite# 1040
Altamonte Springs, FL. 32701
Ph: (407) 629-6711
Fax: (407) 629-6776
www.mjshomedesigns.com

MJS designers group
residential·commercial·architecture

40-2922
LARGO (WS)
Lot # - Subdivision
Street Address
City, State, Zip

A division of Park Square Enterprises Inc.
5200 Vineland Rd. Suite #200
Orlando, Fl. 32811
Phone: (407) 529-3000

Park Square HOMES

ISSUE DATE	08/27/2020
REVISIONS	
PROJECT:	00-0000
SCALE:	AS NOTED
DRAWN BY:	S.B.
DESIGNED BY:	MJS

FOUNDATION PLAN B (STANDARD)

S1.B

© COPYRIGHT 2016 PARK SQUARE HOMES HEREBY RESERVES ITS COMMON LAW COPYRIGHTS IN THESE PLANS, IDEAS AND DESIGN. THESE PLANS, IDEAS AND DESIGNS ARE NOT TO BE COPIED OR MODIFIED IN ANY MATTER OR FORM WHATSOEVER, NOR ARE THEY TO BE ASSIGNED TO ANY THIRD PARTY WITHOUT FIRST OBTAINING THE EXPRESS WRITTEN PERMISSION FROM PARK SQUARE HOMES.

WRITTEN DIMENSIONS SHALL HAVE PRECEDENCE OVER SCALE DIMENSIONS.
Contractors shall verify and be responsible for all dimensions and conditions of the job and M.J.S. Inc. must be notified in writing of any changes in the dimensions, conditions and specifications appearing on these plans.

FIELD REPAIR NOTES

(1) MISSED FOOTING DOWELS MAY BE SUBSTITUTED W/ A STRAIGHT #5 REBAR SET IN A 3/4" DIA. x 6" DEEP HOLE FILLED W/ UNITEX PROPOXY 300 OR SIMPSON SET OR ETF ADHESIVES.

(2) BLOCK WALL OVERHANGING SLAB CONDITION:
UP TO 7/8" - NO REPAIR NECESSARY
7/8" TO 1¼" - ADD FILLED CELL (NO VERTICAL STEEL) MIDPOINT OF WALL BETWEEN EXISTING FILLED CELLS (WITH STEEL) IN AREAS AFFECTED
1¼"+ - REQUIRE SPECIAL ENGINEERING LETTER

(3) PENETRATION OF PLUMBING PIPES/DRYER VENTS THRU PLATES OF A LOAD BEARING WALL MAY OCCUR PROVIDED DBL. STUDS ARE ADDED ON EITHER SIDE OF PENETRATION WITHIN 3" AND TRUSS/FLOOR TRUSS IS NO CLOSER THAN 3" FROM PENETRATION. ADD (1) MTS12 @ TOP AND BOTTOM PLATE

FOUNDATION NOTES

1. CONTRACTOR VERIFY ALL DIMENSIONS ON J05 SITE.
2. ■ DENOTES FILL CELL REINF. W/ CONC. W/ 1- #5 REBAR. GRADE 6O.
   ▣ DENOTES FILL CELL RE NE_ W/ CONC. W/ 2-#5 REBAR. GRADE 60
3. DO NOT SCALE PRINTS! CONSTRUCTION TO BE FROM CALCULATED DIMENSIONS ONLY. ANY DISCREPANCIES OR ERRORS TO BE REPORTED PROMPTLY TO SUPER-VISOR FOR CLARIFICATION.
4. WATER HEATER T&P RELIEF VALVE SHALL E FULL SIZE TO EXTERIOR. WATER HEATER AT OR ABOVE FLOOR LEVEL 61-FALL E IN A FAN WITH DRAIN TO EXTERIOR. WATER HEATER SHALL HAVE AFFROVED THERMAL EXPANSION DEVICE
5. PAVERS MAY BE USED ILO CONCRETE SLABS IN PATIO, PORCH, DRIVE AND WALKWAY AREAS. DELETE SLAB IN AREAS PAVERS ARE USED.
6. MECHANICAL EQUIP. LOCATIONS WILL BE DETERMINED BY COMMUNITY AND COUNTY CODES.
7. IN LIEU OF TREATING THE SOIL, AN ALTERNATIVE TO TERMITE TREATED SOIL CA BE PREMISE 75 WP TERMICIDE.
8. BORA -CARE TO BE APPLIED ON INTERI0R WALLS W/ MANUFACTURER'S INSTRUCTIONS AND SPECIFICATIONS, PURSUANT FLORIDA BUILDING CODE LATEST EDITION.

VERIFICATION OF FIELD CONDITIONS:

CONTRACTOR SHALL VERIFY ALL FIELD CONDITIONS AND DIMENSIONS RELATIVE TO SAME. WHERE THERE ARE CONFLICTS BETWEEN ACTUAL FIELD CONDITIONS AND DATA PRESENTED IN THE DRAWINGS, SUCH CONDITIONS SHALL BE CALLED TO THE ARCHITECT'S AND OR TO THE ENGINEER OF RECORD'S (EOR) ATTENTION AND NECESSARY ADJUSTMENTS MADE PER THEIR INSTRUCTIONS.

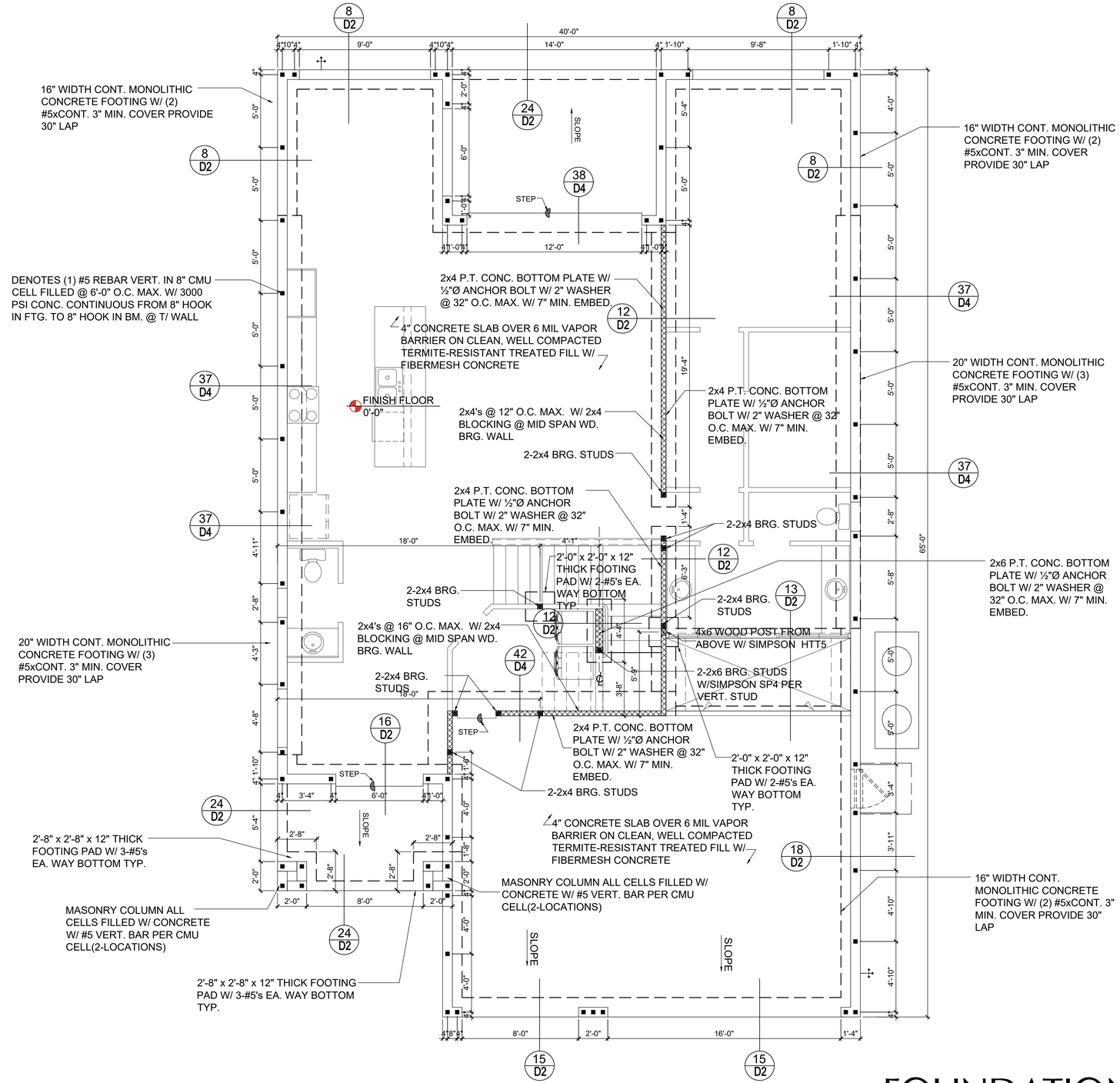

FOUNDATION PLAN

C (STANDARD)

1/8"=1'-0" (11x17) 1/4"=1'-0" (22x34)

THOMPSON ENGINEERING GROUP, INC.
4401 Vineland Road Suite A6 Orlando, FL 32811
Ph: (407) 734-1450
Fax: (407) 734-1790
www.tegfl.com

815 Orienta Ave. Suite# 1040
Altamonte Springs, FL. 32701
Ph: (407) 629-6711
Fax: (407) 629-6776
www.mjshomedesigns.com

MJS designers group residential·commercial·architecture

WRITTEN DIMENSIONS SHALL HAVE PRECEDENCE OVER SCALE DIMENSIONS.
Contractors shall verify and be responsible for all dimensions and conditions of the job and MJS, Inc. must be notified in writing of any changes in the dimensions, conditions and specifications appearing on these plans.

40-2922

LARGO (WS)
Lot # - Subdivision
Street Address
City, State, Zip

A division of Park Square Enterprises Inc.
5200 Vineland Rd. Suite #200
Orlando, Fl. 32811
Phone: (407) 529-3000

Park Square HOMES

ISSUE DATE	08/27/2020
REVISIONS	
PROJECT:	00-0000
SCALE:	AS NOTED
DRAWN BY:	S.B.
DESIGNED BY:	MJS

FOUNDATION PLAN
C (STANDARD)
S1.C

© COPYRIGHT 2016 PARK SQUARE HOMES RESERVED ITS COMMON LAW COPYRIGHTS IN THESE PLANS, IDEAS AND DESIGN. THESE PLANS, IDEAS AND DESIGNS ARE NOT TO BE COPIED OR MODIFIED IN ANY MATTER OR FORM WHATSOEVER NOR ARE THEY TO BE ASSIGNED TO ANY THIRD PARTY WITHOUT FIRST OBTAINING THE EXPRESS WRITTEN PERMISSION FROM PARK SQUARE HOMES.

SAFE LOAD TABLES

FOR GRAVITY, UPLIFT & LATERAL LOADS

8" PRECAST & PRESTRESSED U-LINTELS

GRAVITY

LENGTH \ TYPE	8U8	8F8-0B / 8F8-1B	8F12-0B / 8F12-1B	8F16-0B / 8F16-1B	8F20-0B / 8F20-1B	8F24-0B / 8F24-1B	8F28-0B / 8F28-1B	8F32-0B / 8F32-1B
2'-10" (34") PRECAST	2302	3166	4473	6039	7526	9004	10472	11936
		3166	4473	6039	7526	9004	10472	11936
3'-6" (42") PRECAST	2302	3138	3377	4689	6001	7315	8630	9947
		3166	4473	6039	7526	9004	10472	11936
4'-0" (48") PRECAST	2029	2325	2496	3467	4438	5410	6384	7358
		2646	4473	6039	7526	9004	10472	11936
4'-6" (54") PRECAST	1651	1787	1913	2657	3403	4149	4896	5644
		2170	4027	6039	7526	9004	10472	9668
5'-4" (64") PRECAST	1184	1223	1301	1809	2317	2826	3336	3846
		1665	2889	5057	6096	5400	6424	7450
5'-10" (70") PRECAST	972	1000	1059	1474	1889	2304	2721	3137
		1459	2464	4144	5458	4437	5280	6122
6'-6" (78") PRECAST	937	1255	2101	3263	2746	3358	3971	4585
		1255	2101	3396	5260	7134	8995	6890
7'-6" (90") PRECAST	767	1029	1675	2385	1994	2439	2886	3333
		1029	1675	2610	3839	5596	6613	5047
9'-4" (112") PRECAST	573	632	1049	1469	1210	1482	1754	2027
		768	1212	1818	2544	3469	4030	3127
10'-6" (126") PRECAST	456	482	802	1125	915	1122	1328	1535
		658	1025	1514	2081	2774	3130	2404
11'-4" (136") PRECAST	445	598	935	1365	1854	2355	1793	2075
		598	935	1365	1854	2441	3155	4044
12'-0" (144") PRECAST	414	545	864	1254	1689	2074	1570	1818
		555	864	1254	1693	2211	2832	3590
13'-4" (160") PRECAST	362	427	726	1028	1331	1635	1224	1418
		485	748	1076	1438	1855	2343	2920
14'-0" (168") PRECAST	338	381	648	919	1190	1462	1087	1260
		455	700	1003	1335	1714	2153	2666
14'-8" (176") PRESTRESSED	N.R.	NR	NR	NR	NR	NR	NR	NR
		465	765	1370	2045	2610	3185	3765
15'-4" (184") PRESTRESSED	N.R.	NR	NR	NR	NR	NR	NR	NR
		420	695	1250	1855	2370	2890	3410
17'-4" (208") PRESTRESSED	N.R.	NR	NR	NR	NR	NR	NR	NR
		310	530	950	1400	1800	2200	2600
19'-4" (232") PRESTRESSED	N.R.	NR	NR	NR	NR	NR	NR	NR
		240	400	750	1090	1400	1720	2030
21'-4" (256") PRESTRESSED	N.R.	NR	NR	NR	NR	NR	NR	NR
		183	330	610	940	1340	1780	2110
22'-0" (264") PRESTRESSED	N.R.	NR	NR	NR	NR	NR	NR	NR
		160	300	570	870	1250	1660	1970
24'-0" (288") PRESTRESSED	N.R.	NR	NR	NR	NR	NR	NR	NR
		130	240	470	720	1030	1350	1610

8" PRECAST W/ 2" RECESS DOOR U-LINTELS

GRAVITY

LENGTH \ TYPE	8RU6	8RF6-0B / 8RF6-1B	8RF10-0B / 8RF10-1B	8RF14-0B / 8RF14-1B	8RF18-0B / 8RF18-1B	8RF22-0B / 8RF22-1B	8RF26-0B / 8RF26-1B	8RF30-0B / 8RF30-1B
4'-4" (52") PRECAST	1489	1591	3053	2982	3954	4929	5904	6880
		1827	3412	4982	6472	7947	9416	10878
4'-6" (54") PRECAST	1357	1449	2782	2714	3600	4487	5375	6264
		1702	3412	4982	6472	7947	9416	10878
5'-8" (68") PRECAST	785	832	1602	1550	2058	2566	3075	3585
		1153	2162	4074	6472	6516	5814	6839
5'-10" (70") PRECAST	735	779	1500	1449	1924	2400	2876	3352
		1103	2051	3811	6472	6516	5450	6411
6'-8" (80") PRECAST	822	907	1677	2933	2576	3223	3872	4522
		907	1677	2933	4100	6730	8177	6707
7'-6" (90") PRECAST	665	761	1377	2252	1958	2451	2944	3439
		764	1377	2329	3609	5492	6624	5132
9'-8" (116") PRECAST	371	420	834	1253	1071	1342	1614	1886
		535	928	1497	2179	2618	3595	2875

8" PRECAST & PRESTRESSED U-LINTELS

UPLIFT / LATERAL

LENGTH \ TYPE	8F8-1T / 8F8-2T	8F12-1T / 8F12-2T	8F16-1T / 8F16-2T	8F20-1T / 8F20-2T	8F24-1T / 8F24-2T	8F28-1T / 8F28-2T	8F32-1T / 8F32-2T	LATERAL 8U8	LATERAL 8F8
2'-10" (34") PRECAST	2727	2878	4101	5332	6569	7811	9055	2021	2021
	2727	2784	3981	5190	6407	7630	8857		
3'-6" (42") PRECAST	2165	2289	3260	4237	5219	6204	7192	1257	1257
	2165	2215	3165	4125	5091	6061	7036		
4'-0" (48") PRECAST	1878	1989	2832	3680	4532	5387	6245	938	938
	1878	1925	2750	3583	4422	5264	6110		
4'-6" (54") PRECAST	1660	1762	2507	3257	4010	4767	5525	727	727
	1660	1705	2435	3171	3913	4658	5406		
5'-4" (64") PRECAST	1393*	1484	2110	2741	3375	4010	4648	505	505
	1393	1437	2050	2670	3293	3920	4549		
5'-10" (70") PRECAST	1272*	1357	1930	2505	3084	3665	4247	418	418
	1272	1315	1875	2441	3010	3583	4157		
6'-6" (78") PRECAST	1141*	1200	1733	2250	2769	3290	3812	707	887
	1141	1182	1684	2192	2703	3216	3732		
7'-6" (90") PRECAST	959*	912	1475	1914	2354	2797	3240	591	657
	990	1029	1466	1907	2351	2797	3245		
9'-4" (112") PRECAST	801*	612	980	1269	1560	1852	2144	454	630
	801	755	1192	1550	1910	2271	2634		
10'-6" (126") PRECAST	716*	498	793	1027	1261	1496	1731	396	493
	716	611	1039	1389	1711	2034	2358		
11'-4" (136") PRECAST	666*	439	696	899	1104	1309	1515	363	556
	666	535	905	1295	1595	1896	2198		
12'-0" (144") PRECAST	607*	400	631	816	1001	1186	1372	340	494
	631	486	818	1209	1514	1799	2086		
13'-4" (160") PRECAST	500*	340	532	686	841	997	1153	302	398
	573	409	682	1004	1367	1637	1897		
14'-0" (168") PRECAST	458*	316	493	635	778	922	1065	286	360
	548	378	629	922	1254	1567	1816		
14'-8" (176") PRESTRESSED	243	295	459	591	724	857	990	N.R.	357
	243	352	582	852	1156	1491	1742		
15'-4" (184") PRESTRESSED	228	278	430	553	677	801	925	N.R.	327
	228	329	542	791	1072	1381	1676		
17'-4" (208") PRESTRESSED	188	236	361	464	567	670	774	N.R.	255
	188	276	449	649	874	1121	1389		
19'-4" (232") PRESTRESSED	165	207	313	401	490	578	667	N.R.	204
	165	239	383	550	736	940	1160		
21'-4" (256") PRESTRESSED	145	186	278	356	433	512	590	N.R.	172
	142	212	336	477	635	807	993		
22'-0" (264") PRESTRESSED	140	180	268	343	418	493	568	N.R.	161
	137	205	322	457	607	771	947		
24'-0" (288") PRESTRESSED	127	165	244	312	380	447	515	N.R.	135
	124	186	290	408	538	680	833		

*REDUCE VALUE BY 25% FOR GRADE 40 FIELD REBAR

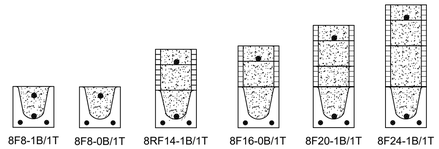

TYPE DESIGNATION

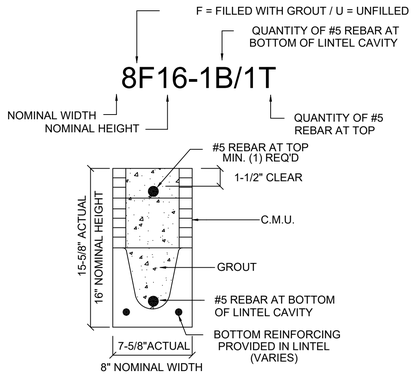

MATERIALS

1. f'c precast lintels = 3500 psi.
2. f'c prestressed lintels = 6000 psi.
3. f'c grout = 3000 psi w/ maximum 3/8" aggregate.
4. Concrete masonry units (CMU) per ASTM C90 w/ minimum net area compressive strength = 1900 psi.
5. Rebar provided in precast lintel per ASTM A615 GR60. Field rebar per ASTM A615 GR40 or GR60.
6. Prestressing strand per ASTM A416 grade 270 low relaxation.
7. 7/32 wire per ASTM A510.
8. Mortar per ASTM C270 type M or S.

GENERAL NOTES

1. Provide full mortar head and bed joints.
2. Shore filled lintels as required.
3. Installation of lintel must comply with the architectural and/or structural drawings.
4. Lintels are manufactured with 5-1/2" long notches at the ends to accommodate vertical cell reinforcing and grouting.
5. All lintels meet or exceed L/360 vertical deflection, except lintels 17'-4" and longer with a nominal height of 8" meet or exceed L/180.
6. Bottom field added rebar to be located at the bottom of the lintel cavity.
7. 7/32" diameter wire stirrups are welded to the bottom steel for mechanical anchorage.
8. Cast-in-place concrete may be provided in composite lintel in lieu of concrete masonry units.
9. Safe load ratings based on rational design analysis per ACI 318 and ACI 530

SAFE LOAD TABLE NOTES

1. All values based on minimum 4" bearing. Exception: Safe loads for unfilled lintels must be reduced by 20% if bearing length is less than 6-1/2". Safe loads for all recessed lintels based on 8" nominal bearing.
2. N.R. = Not Rated.
3. Safe loads are total superimposed allowable load on the section specified.
4. Safe loads based on grade 40 or grade 60 field rebar.
5. Additional lateral load capacity can be obtained by the designer by providing addional reinforced masonry above the precast lintel.
6. One #7 rebar may be substituted for two #5 rebars in 8" lintels only.
7. The designer may evaluate concentrated loads from the safe load tables by calculating the maximum resisting moment and shear at d-away from the face of support.
8. For composite lintel heights not shown, use safe load from next lower height.
9. All safe loads in units of pounds per linear foot.

8" PRECAST W/ 2" RECESS DOOR U-LINTELS

UPLIFT / LATERAL

LENGTH \ TYPE	8RF6-1T / 8RF6-2T	8RF10-1T / 8RF10-2T	8RF14-1T / 8RF14-2T	8RF18-1T / 8RF18-2T	8RF22-1T / 8RF22-2T	8RF26-1T / 8RF26-2T	8RF30-1T / 8RF30-2T	LATERAL 8RU6	LATERAL 8RF6
4'-4" (52") PRECAST	1244	1573	2413	3260	4112	4967	5825	932	932
	1244	1519	2339	3170	4008	4850	5696		
4'-6" (54") PRECAST	1192	1507	2311	3121	3937	4756	5577	853	853
	1192	1455	2240	3036	3837	4643	5453		
5'-8" (68") PRECAST	924*	1172	1795	2423	3055	3689	4325	501	501
	924	1132	1741	2357	2978	3603	4230		
5'-10" (70") PRECAST	896*	1138	1742	2352	2965	3581	4198	469	469
	896	1099	1690	2288	2891	3497	4106		
6'-8" (80") PRECAST	778	882	1513	2042	2573	3107	3642	830	1100
	778	956	1468	1987	2509	3035	3563		
7'-6" (90") PRECAST	688	697	1325	1810	2280	2753	3227	710	941
	688	849	1302	1762	2225	2690	3157		
9'-8" (116") PRECAST	533*	433	808	1123	1413	1704	1995	516	614
	533	527	1009	1369	1728	2088	2450		

*REDUCE VALUE BY 25% FOR GRADE 40 FIELD REBAR

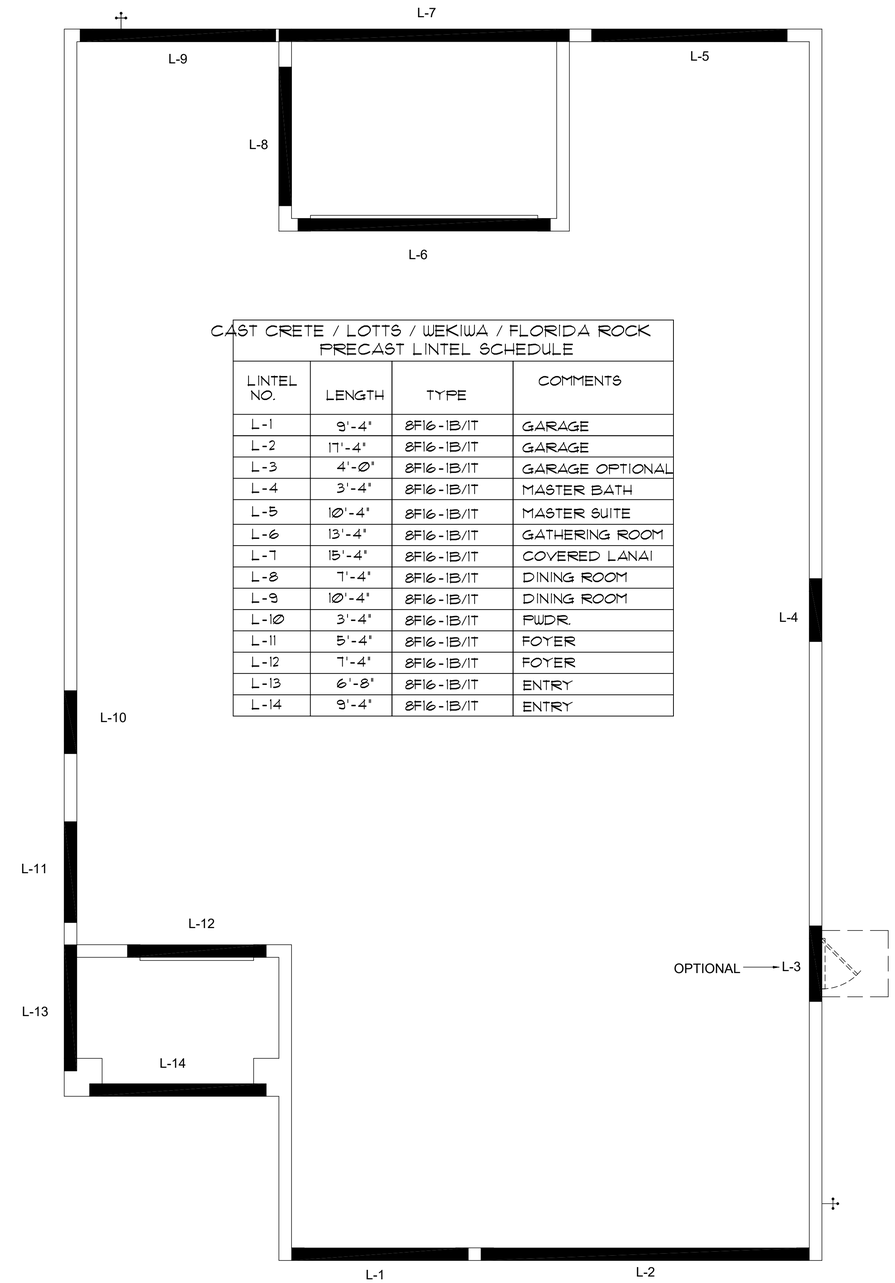

CAST CRETE / LOTTS / WEKIWA / FLORIDA ROCK PRECAST LINTEL SCHEDULE

LINTEL NO.	LENGTH	TYPE	COMMENTS
L-1	9'-4"	8F16-1B/1T	GARAGE
L-2	17'-4"	8F16-1B/1T	GARAGE
L-3	4'-0"	8F16-1B/1T	GARAGE OPTIONAL
L-4	3'-4"	8F16-1B/1T	MASTER BATH
L-5	10'-4"	8F16-1B/1T	MASTER SUITE
L-6	13'-4"	8F16-1B/1T	GATHERING ROOM
L-7	15'-4"	8F16-1B/1T	COVERED LANAI
L-8	7'-4"	8F16-1B/1T	DINING ROOM
L-9	10'-4"	8F16-1B/1T	DINING ROOM
L-10	3'-4"	8F16-1B/1T	PWDR.
L-11	5'-4"	8F16-1B/1T	FOYER
L-12	7'-4"	8F16-1B/1T	FOYER
L-13	6'-8"	8F16-1B/1T	ENTRY
L-14	9'-4"	8F16-1B/1T	ENTRY

PRECAST LINTEL PLAN

A (STANDARD)

1/8"=1'-0" (11x17) 1/4"=1'-0" (22x34)

THOMPSON ENGINEERING GROUP, INC.
4401 Vineland Road Suite A6 Orlando, FL 32811
Ph: (407) 734-1450
Fax: (407) 734-1790
www.tegfl.com

MJS designers group
residential•commercial•architecture
815 Orienta Ave. Suite# 1040
Altamonte Springs, FL. 32701
Ph: (407) 629-6711
Fax: (407) 629-6776
www.mjshomedesigns.com

WRITTEN DIMENSIONS SHALL HAVE PRECEDENCE OVER SCALE DIMENSIONS.
Contractors shall verify and be responsible for all dimensions and conditions of the job and MJS, Inc. must be notified in writing of any changes in the dimensions, conditions and specifications appearing on these plans.

40-2922

LARGO (WS)
Lot # - Subdivision
Street Address
City, State, Zip

A division of Park Square Enterprises Inc.
5200 Vineland Rd. Suite #200
Orlando, Fl. 32811
Phone: (407) 529-3000
Park Square HOMES

ISSUE DATE	08/27/2020
REVISIONS	
PROJECT:	00-0000
SCALE:	AS NOTED
DRAWN BY:	S.B.
DESIGNED BY:	MJS

PRECAST LINTEL PLAN & NOTES A (STANDARD)

S2.A

© COPYRIGHT 2016 PARK SQUARE HOMES HEREBY RESERVES ITS COMMON LAW COPYRIGHTS IN THESE PLANS, IDEAS AND DESIGN. THESE PLANS, IDEAS AND DESIGNS ARE NOT TO BE COPIED OR MODIFIED IN ANY MATTER OR FORM WHATSOEVER, NOR ARE THEY TO BE ASSIGNED TO ANY THIRD PARTY WITHOUT FIRST OBTAINING THE EXPRESS WRITTEN PERMISSION FROM PARK SQUARE HOMES.

SAFE LOAD TABLES

FOR GRAVITY, UPLIFT & LATERAL LOADS

8" PRECAST & PRESTRESSED U-LINTELS

LENGTH \ TYPE	8U8	8F8-0B / 8F8-1B	8F12-0B / 8F12-1B	8F16-0B / 8F16-1B	8F20-0B / 8F20-1B	8F24-0B / 8F24-1B	8F28-0B / 8F28-1B	8F32-0B / 8F32-1B
		GRAVITY						
2'-10" (34") PRECAST	2302	3166	4473	6039	7526	9004	10472	11936
		3166	4473	6039	7526	9004	10472	11936
3'-6" (42") PRECAST	2302	3138	3377	4689	6001	7315	8630	9947
		3166	4473	6039	7526	9004	10472	11936
4'-0" (48") PRECAST	2029	2325	2496	3467	4438	5410	6384	7358
		2646	4473	6039	7526	9004	10472	11936
4'-6" (54") PRECAST	1651	1787	1913	2657	3403	4149	4896	5644
		2170	4027	6039	7526	9004	10472	9668
5'-4" (64") PRECAST	1184	1223	1301	1809	2317	2826	3336	3846
		1665	2889	5057	6096	5400	6424	7450
5'-10" (70") PRECAST	972	1000	1059	1474	1889	2304	2721	3137
		1459	2464	4144	5458	4437	5280	6122
6'-6" (78") PRECAST	937	1255	2101	3263	2746	3358	3971	4585
		1255	2101	3396	5260	7134	8995	6890
7'-6" (90") PRECAST	767	1029	1675	2385	1994	2439	2886	3333
		1029	1675	2610	3839	5596	6613	5047
9'-4" (112") PRECAST	573	632	1049	1469	1210	1482	1754	2027
		768	1212	1818	2544	3469	4030	3127
10'-6" (126") PRECAST	456	482	802	1125	915	1122	1328	1535
		658	1025	1514	2081	2774	3130	2404
11'-4" (136") PRECAST	445	598	935	1365	1854	2355	1793	2075
		598	935	1365	1854	2441	3155	4044
12'-0" (144") PRECAST	414	545	864	1254	1689	2074	1570	1818
		555	864	1254	1693	2211	2832	3590
13'-4" (160") PRECAST	362	427	726	1028	1331	1635	1224	1418
		485	748	1076	1438	1855	2343	2920
14'-0" (168") PRECAST	338	381	648	919	1190	1462	1087	1260
		455	700	1003	1335	1714	2153	2666
14'-8" (176") PRESTRESSED	N.R.	NR	NR	NR	NR	NR	NR	NR
		465	765	1370	2045	2610	3185	3765
15'-4" (184") PRESTRESSED	N.R.	NR	NR	NR	NR	NR	NR	NR
		420	695	1250	1855	2370	2890	3410
17'-4" (208") PRESTRESSED	N.R.	NR	NR	NR	NR	NR	NR	NR
		310	530	950	1400	1800	2200	2600
19'-4" (232") PRESTRESSED	N.R.	NR	NR	NR	NR	NR	NR	NR
		240	400	750	1090	1400	1720	2030
21'-4" (256") PRESTRESSED	N.R.	NR	NR	NR	NR	NR	NR	NR
		183	330	610	940	1340	1780	2110
22'-0" (264") PRESTRESSED	N.R.	NR	NR	NR	NR	NR	NR	NR
		160	300	570	870	1250	1660	1970
24'-0" (288") PRESTRESSED	N.R.	NR	NR	NR	NR	NR	NR	NR
		130	240	470	720	1030	1350	1610

8" PRECAST W/ 2" RECESS DOOR U-LINTELS

LENGTH \ TYPE	8RU6	8RF6-0B / 8RF6-1B	8RF10-0B / 8RF10-1B	8RF14-0B / 8RF14-1B	8RF18-0B / 8RF18-1B	8RF22-0B / 8RF22-1B	8RF26-0B / 8RF26-1B	8RF30-0B / 8RF30-1B
		GRAVITY						
4'-4" (52") PRECAST	1489	1591	3053	2982	3954	4929	5904	6880
		1827	3412	4982	6472	7947	9416	10878
4'-6" (54") PRECAST	1357	1449	2782	2714	3600	4487	5375	6264
		1702	3412	4982	6472	7947	9416	10878
5'-8" (68") PRECAST	785	832	1602	1550	2058	2566	3075	3585
		1153	2162	4074	6472	6516	5814	6839
5'-10" (70") PRECAST	735	779	1500	1449	1924	2400	2876	3352
		1103	2051	3811	6472	6516	5450	6411
6'-8" (80") PRECAST	822	907	1677	2933	2576	3223	3872	4522
		907	1677	2933	4100	6730	8177	6707
7'-6" (90") PRECAST	665	761	1377	2252	1958	2451	2944	3439
		764	1377	2329	3609	5492	6624	5132
9'-8" (116") PRECAST	371	420	834	1253	1071	1342	1614	1886
		535	928	1497	2179	2618	3595	2875

8" PRECAST & PRESTRESSED U-LINTELS

LENGTH \ TYPE	8F8-1T / 8F8-2T	8F12-1T / 8F12-2T	8F16-1T / 8F16-2T	8F20-1T / 8F20-2T	8F24-1T / 8F24-2T	8F28-1T / 8F28-2T	8F32-1T / 8F32-2T	LATERAL 8U8	LATERAL 8F8
	UPLIFT								
2'-10" (34") PRECAST	2727	2878	4101	5332	6569	7811	9055	2021	2021
	2727	2784	3981	5190	6407	7630	8857		
3'-6" (42") PRECAST	2165	2289	3260	4237	5219	6204	7192	1257	1257
	2165	2215	3165	4125	5091	6061	7036		
4'-0" (48") PRECAST	1878	1989	2832	3680	4532	5387	6245	938	938
	1878	1925	2750	3583	4422	5264	6110		
4'-6" (54") PRECAST	1660	1762	2507	3257	4010	4767	5525	727	727
	1660	1705	2435	3171	3913	4658	5406		
5'-4" (64") PRECAST	1393*	1484	2110	2741	3375	4010	4648	505	505
	1393	1437	2050	2670	3293	3920	4549		
5'-10" (70") PRECAST	1272*	1357	1930	2505	3084	3665	4247	418	418
	1272	1315	1875	2441	3010	3583	4157		
6'-6" (78") PRECAST	1141*	1200	1733	2250	2769	3290	3812	707	887
	1141	1182	1684	2192	2703	3216	3732		
7'-6" (90") PRECAST	959*	912	1475	1914	2354	2797	3240	591	657
	990	1029	1466	1907	2351	2797	3245		
9'-4" (112") PRECAST	801*	612	980	1269	1560	1852	2144	454	630
	801	755	1192	1550	1910	2271	2634		
10'-6" (126") PRECAST	716*	498	793	1027	1261	1496	1731	396	493
	716	611	1039	1389	1711	2034	2358		
11'-4" (136") PRECAST	666*	439	696	899	1104	1309	1515	363	556
	666	535	905	1295	1595	1896	2198		
12'-0" (144") PRECAST	607*	400	631	816	1001	1186	1372	340	494
	631	486	818	1209	1514	1799	2086		
13'-4" (160") PRECAST	500*	340	532	686	841	997	1153	302	398
	573	409	682	1004	1367	1637	1897		
14'-0" (168") PRECAST	458*	316	493	635	778	922	1065	286	360
	548	378	629	922	1254	1567	1816		
14'-8" (176") PRESTRESSED	243	295	459	591	724	857	990	N.R.	357
	243	352	582	852	1156	1491	1742		
15'-4" (184") PRESTRESSED	228	278	430	553	677	801	925	N.R.	327
	228	329	542	791	1072	1381	1676		
17'-4" (208") PRESTRESSED	188	236	361	464	567	670	774	N.R.	255
	188	276	449	649	874	1121	1389		
19'-4" (232") PRESTRESSED	165	207	313	401	490	578	667	N.R.	204
	165	239	383	550	736	940	1160		
21'-4" (256") PRESTRESSED	145	186	278	356	433	512	590	N.R.	172
	142	212	336	477	635	807	993		
22'-0" (264") PRESTRESSED	140	180	268	343	418	493	568	N.R.	161
	137	205	322	457	607	771	947		
24'-0" (288") PRESTRESSED	127	165	244	312	380	447	515	N.R.	135
	124	186	290	408	538	680	833		

*REDUCE VALUE BY 25% FOR GRADE 40 FIELD REBAR

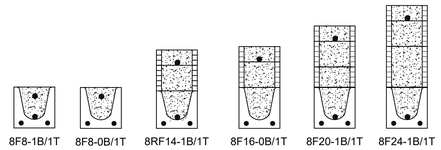

TYPE DESIGNATION

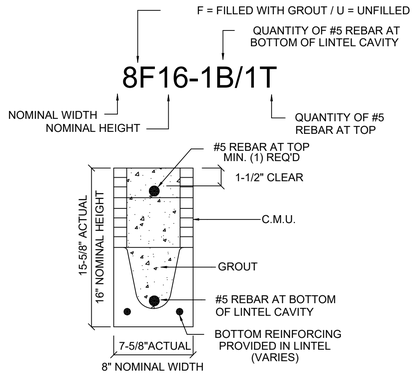

MATERIALS

1. f'c precast lintels = 3500 psi.
2. f'c prestressed lintels = 6000 psi.
3. f'c grout = 3000 psi w/ maximum 3/8" aggregate.
4. Concrete masonry units (CMU) per ASTM C90 w/ minimum net area compressive strength = 1900 psi.
5. Rebar provided in precast lintel per ASTM A615 GR60. Field rebar per ASTM A615 GR40 or GR60.
6. Prestressing strand per ASTM A416 grade 270 low relaxation.
7. 7/32 wire per ASTM A510.
8. Mortar per ASTM C270 type M or S.

GENERAL NOTES

1. Provide full mortar head and bed joints.
2. Shore filled lintels as required.
3. Installation of lintel must comply with the architectural and/or structural drawings.
4. Lintels are manufactured with 5-1/2" long notches at the ends to accommodate vertical cell reinforcing and grouting.
5. All lintels meet or exceed L/360 vertical deflection, except lintels 17'-4" and longer with a nominal height of 8" meet or exceed L/180.
6. Bottom field added rebar to be located at the bottom of the lintel cavity.
7. 7/32" diameter wire stirrups are welded to the bottom steel for mechanical anchorage.
8. Cast-in-place concrete may be provided in composite lintel in lieu of concrete masonry units.
9. Safe load ratings based on rational design analysis per ACI 318 and ACI 530

SAFE LOAD TABLE NOTES

1. All values based on minimum 4" bearing. Exception: Safe loads for unfilled lintels must be reduced by 20% if bearing length is less than 6-1/2". Safe loads for all recessed lintels based on 8" nominal bearing.
2. N.R. = Not Rated.
3. Safe loads are total superimposed allowable load on the section specified.
4. Safe loads based on grade 40 or grade 60 field rebar.
5. Additional lateral load capacity can be obtained by the designer by providing addional reinforced masonry above the precast lintel.
6. One #7 rebar may be substituted for two #5 rebars in 8" lintels only.
7. The designer may evaluate concentrated loads from the safe load tables by calculating the maximum resisting moment and shear at d-away from the face of support.
8. For composite lintel heights not shown, use safe load from next lower height.
9. All safe loads in units of pounds per linear foot.

8" PRECAST W/ 2" RECESS DOOR U-LINTELS

LENGTH \ TYPE	8RF6-1T / 8RF6-2T	8RF10-1T / 8RF10-2T	8RF14-1T / 8RF14-2T	8RF18-1T / 8RF18-2T	8RF22-1T / 8RF22-2T	8RF26-1T / 8RF26-2T	8RF30-1T / 8RF30-2T	LATERAL 8RU6	LATERAL 8RF6
	UPLIFT								
4'-4" (52") PRECAST	1244	1573	2413	3260	4112	4967	5825	932	932
	1244	1519	2339	3170	4008	4850	5696		
4'-6" (54") PRECAST	1192	1507	2311	3121	3937	4756	5577	853	853
	1192	1455	2240	3036	3837	4643	5453		
5'-8" (68") PRECAST	924*	1172	1795	2423	3055	3689	4325	501	501
	924	1132	1741	2357	2978	3603	4230		
5'-10" (70") PRECAST	896*	1138	1742	2352	2965	3581	4198	469	469
	896	1099	1690	2288	2891	3497	4106		
6'-8" (80") PRECAST	778	882	1513	2042	2573	3107	3642	830	1100
	778	956	1468	1987	2509	3035	3563		
7'-6" (90") PRECAST	688	697	1325	1810	2280	2753	3227	710	941
	688	849	1302	1762	2225	2690	3157		
9'-8" (116") PRECAST	533*	433	808	1123	1413	1704	1995	516	614
	533	527	1009	1369	1728	2088	2450		

*REDUCE VALUE BY 25% FOR GRADE 40 FIELD REBAR

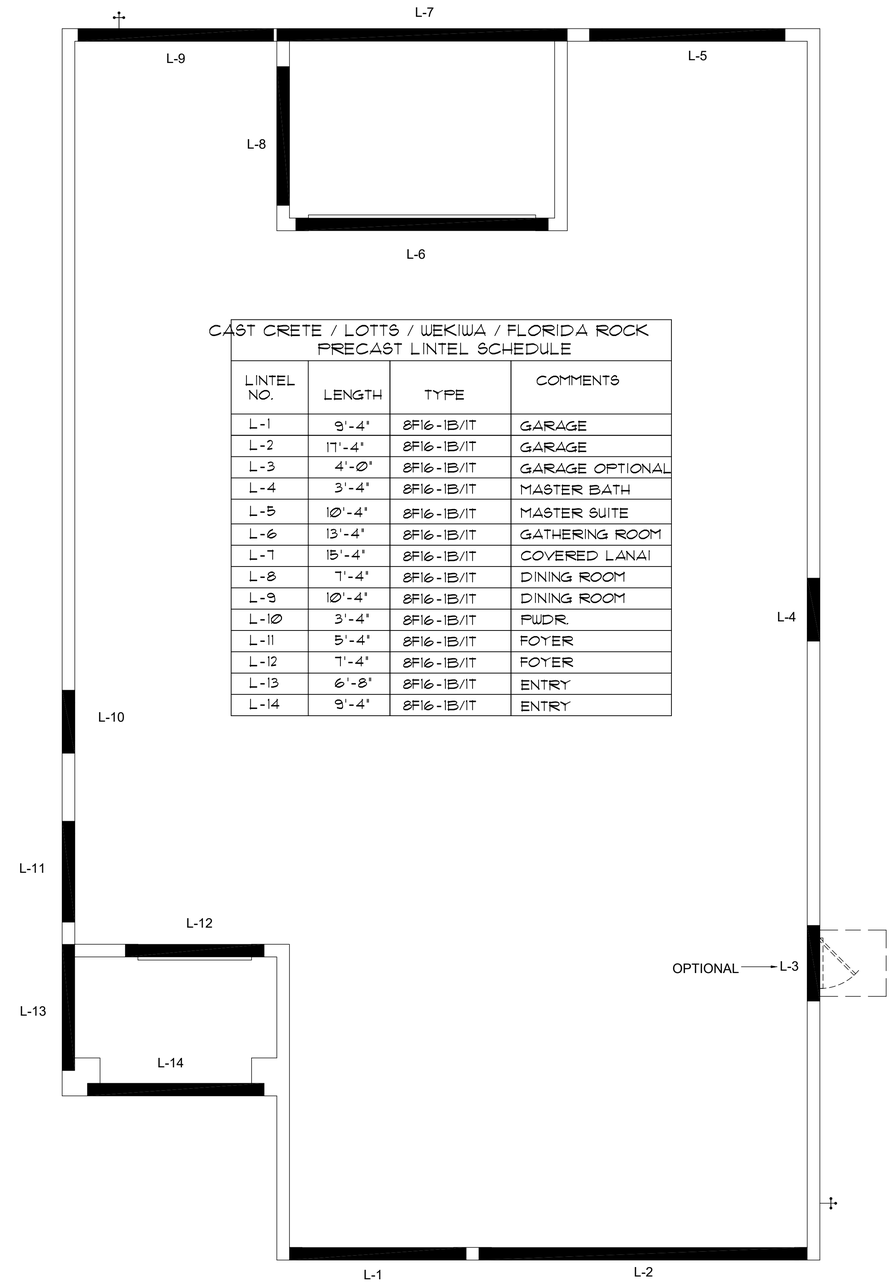

CAST CRETE / LOTTS / WEKIWA / FLORIDA ROCK PRECAST LINTEL SCHEDULE

LINTEL NO.	LENGTH	TYPE	COMMENTS
L-1	9'-4"	8F16-1B/1T	GARAGE
L-2	17'-4"	8F16-1B/1T	GARAGE
L-3	4'-0"	8F16-1B/1T	GARAGE OPTIONAL
L-4	3'-4"	8F16-1B/1T	MASTER BATH
L-5	10'-4"	8F16-1B/1T	MASTER SUITE
L-6	13'-4"	8F16-1B/1T	GATHERING ROOM
L-7	15'-4"	8F16-1B/1T	COVERED LANAI
L-8	7'-4"	8F16-1B/1T	DINING ROOM
L-9	10'-4"	8F16-1B/1T	DINING ROOM
L-10	3'-4"	8F16-1B/1T	PWDR.
L-11	5'-4"	8F16-1B/1T	FOYER
L-12	7'-4"	8F16-1B/1T	FOYER
L-13	6'-8"	8F16-1B/1T	ENTRY
L-14	9'-4"	8F16-1B/1T	ENTRY

PRECAST LINTEL PLAN

B (STANDARD)

1/8"=1'-0" (11x17) 1/4"=1'-0" (22x34)

THOMPSON ENGINEERING GROUP, INC.
4401 Vineland Road Suite A6 Orlando, FL 32811
Ph: (407) 734-1450
Fax: (407) 734-1790
www.tegfl.com

MJS designers group
residential•commercial•architecture
815 Orienta Ave. Suite# 1040
Altamonte Springs, FL. 32701
Ph: (407) 629-6711
Fax: (407) 629-6776
www.mjshomedesigns.com

WRITTEN DIMENSIONS SHALL HAVE PRECEDENCE OVER SCALE DIMENSIONS.
Contractors shall verify all plans, dimensions and conditions of the job and MJS, Inc. must be notified in writing of any changes in the dimensions, conditions and specifications appearing on these plans.

40-2922

LARGO (WS)
Lot # - Subdivision
Street Address
City, State, Zip

A division of Park Square Enterprises Inc.
5200 Vineland Rd. Suite #200
Orlando, Fl. 32811
Phone: (407) 529-3000
Park Square HOMES

ISSUE DATE	08/27/2020
REVISIONS	
PROJECT:	00-0000
SCALE:	AS NOTED
DRAWN BY:	S.B.
DESIGNED BY:	MJS

PRECAST LINTEL PLAN & NOTES B (STANDARD)

S2.B

© COPYRIGHT 2016 PARK SQUARE HOMES HEREBY RESERVES ITS COMMON LAW COPYRIGHTS IN THESE PLANS, IDEAS AND DESIGN. THESE PLANS, IDEAS AND DESIGNS ARE NOT TO BE COPIED OR MODIFIED IN ANY MATTER OR FORM WHATSOEVER, NOR ARE THEY TO BE ASSIGNED TO ANY THIRD PARTY WITHOUT FIRST OBTAINING THE EXPRESS WRITTEN PERMISSION FROM PARK SQUARE HOMES.

SAFE LOAD TABLES

FOR GRAVITY, UPLIFT & LATERAL LOADS

8" PRECAST & PRESTRESSED U-LINTELS

LENGTH \ TYPE		GRAVITY						
	8U8	8F8-0B	8F12-0B	8F16-0B	8F20-0B	8F24-0B	8F28-0B	8F32-0B
		8F8-1B	8F12-1B	8F16-1B	8F20-1B	8F24-1B	8F28-1B	8F32-1B
2'-10" (34") PRECAST	2302	3166	4473	6039	7526	9004	10472	11936
		3166	4473	6039	7526	9004	10472	11936
3'-6" (42") PRECAST	2302	3138	3377	4689	6001	7315	8630	9947
		3166	4473	6039	7526	9004	10472	11936
4'-0" (48") PRECAST	2029	2325	2496	3467	4438	5410	6384	7358
		2646	4473	6039	7526	9004	10472	11936
4'-6" (54") PRECAST	1651	1787	1913	2657	3403	4149	4896	5644
		2170	4027	6039	7526	9004	10472	9668
5'-4" (64") PRECAST	1184	1223	1301	1809	2317	2826	3336	3846
		1665	2889	5057	6096	5400	6424	7450
5'-10" (70") PRECAST	972	1000	1059	1474	1889	2304	2721	3137
		1459	2464	4144	5458	4437	5280	6122
6'-6" (78") PRECAST	937	1255	2101	3263	2746	3358	3971	4585
		1255	2101	3396	5260	7134	8995	6890
7'-6" (90") PRECAST	767	1029	1675	2385	1994	2439	2886	3333
		1029	1675	2610	3839	5596	6613	5047
9'-4" (112") PRECAST	573	632	1049	1469	1210	1482	1754	2027
		768	1212	1818	2544	3469	4030	3127
10'-6" (126") PRECAST	456	482	802	1125	915	1122	1328	1535
		658	1025	1514	2081	2774	3130	2404
11'-4" (136") PRECAST	445	598	935	1365	1854	2355	1793	2075
		598	935	1365	1854	2441	3155	4044
12'-0" (144") PRECAST	414	545	864	1254	1689	2074	1570	1818
		555	864	1254	1693	2211	2832	3590
13'-4" (160") PRECAST	362	427	726	1028	1331	1635	1224	1418
		485	748	1076	1438	1855	2343	2920
14'-0" (168") PRECAST	338	381	648	919	1190	1462	1087	1260
		455	700	1003	1335	1714	2153	2666
14'-8" (176") PRESTRESSED	N.R.	NR	NR	NR	NR	NR	NR	NR
		465	765	1370	2045	2610	3185	3765
15'-4" (184") PRESTRESSED	N.R.	NR	NR	NR	NR	NR	NR	NR
		420	695	1250	1855	2370	2890	3410
17'-4" (208") PRESTRESSED	N.R.	NR	NR	NR	NR	NR	NR	NR
		310	530	950	1400	1800	2200	2600
19'-4" (232") PRESTRESSED	N.R.	NR	NR	NR	NR	NR	NR	NR
		240	400	750	1090	1400	1720	2030
21'-4" (256") PRESTRESSED	N.R.	NR	NR	NR	NR	NR	NR	NR
		183	330	610	940	1340	1780	2110
22'-0" (264") PRESTRESSED	N.R.	NR	NR	NR	NR	NR	NR	NR
		160	300	570	870	1250	1660	1970
24'-0" (288") PRESTRESSED	N.R.	NR	NR	NR	NR	NR	NR	NR
		130	240	470	720	1030	1350	1610

8" PRECAST W/ 2" RECESS DOOR U-LINTELS

LENGTH \ TYPE		GRAVITY						
	8RU6	8RF6-0B	8RF10-0B	8RF14-0B	8RF18-0B	8RF22-0B	8RF26-0B	8RF30-0B
		8RF6-1B	8RF10-1B	8RF14-1B	8RF18-1B	8RF22-1B	8RF26-1B	8RF30-1B
4'-4" (52") PRECAST	1489	1591	3053	2982	3954	4929	5904	6880
		1827	3412	4982	6472	7947	9416	10878
4'-6" (54") PRECAST	1357	1449	2782	2714	3600	4487	5375	6264
		1702	3412	4982	6472	7947	9416	10878
5'-8" (68") PRECAST	785	832	1602	1550	2058	2566	3075	3585
		1153	2162	4074	6472	6516	5814	6839
5'-10" (70") PRECAST	735	779	1500	1449	1924	2400	2876	3352
		1103	2051	3811	6472	6516	5450	6411
6'-8" (80") PRECAST	822	907	1677	2933	2576	3223	3872	4522
		907	1677	2933	4100	6730	8177	6707
7'-6" (90") PRECAST	665	761	1377	2252	1958	2451	2944	3439
		764	1377	2329	3609	5492	6624	5132
9'-8" (116") PRECAST	371	420	834	1253	1071	1342	1614	1886
		535	928	1497	2179	2618	3595	2875

8" PRECAST & PRESTRESSED U-LINTELS

LENGTH \ TYPE	UPLIFT							LATERAL	
	8F8-1T	8F12-1T	8F16-1T	8F20-1T	8F24-1T	8F28-1T	8F32-1T	8U8	8F8
	8F8-2T	8F12-2T	8F16-2T	8F20-2T	8F24-2T	8F28-2T	8F32-2T		
2'-10" (34") PRECAST	2727	2878	4101	5332	6569	7811	9055	2021	2021
	2727	2784	3981	5190	6407	7630	8857		
3'-6" (42") PRECAST	2165	2289	3260	4237	5219	6204	7192	1257	1257
	2165	2215	3165	4125	5091	6061	7036		
4'-0" (48") PRECAST	1878	1989	2832	3680	4532	5387	6245	938	938
	1878	1925	2750	3583	4422	5264	6110		
4'-6" (54") PRECAST	1660	1762	2507	3257	4010	4767	5525	727	727
	1660	1705	2435	3171	3913	4658	5406		
5'-4" (64") PRECAST	1393*	1484	2110	2741	3375	4010	4648	505	505
	1393	1437	2050	2670	3293	3920	4549		
5'-10" (70") PRECAST	1272*	1357	1930	2505	3084	3665	4247	418	418
	1272	1315	1875	2441	3010	3583	4157		
6'-6" (78") PRECAST	1141*	1200	1733	2250	2769	3290	3812	707	887
	1141	1182	1684	2192	2703	3216	3732		
7'-6" (90") PRECAST	959*	912	1475	1914	2354	2797	3240	591	657
	990	1029	1466	1907	2351	2797	3245		
9'-4" (112") PRECAST	801*	612	980	1269	1560	1852	2144	454	630
	801	755	1192	1550	1910	2271	2634		
10'-6" (126") PRECAST	716*	498	793	1027	1261	1496	1731	396	493
	716	611	1039	1389	1711	2034	2358		
11'-4" (136") PRECAST	666*	439	696	899	1104	1309	1515	363	556
	666	535	905	1295	1595	1896	2198		
12'-0" (144") PRECAST	607*	400	631	816	1001	1186	1372	340	494
	631	486	818	1209	1514	1799	2086		
13'-4" (160") PRECAST	500*	340	532	686	841	997	1153	302	398
	573	409	682	1004	1367	1637	1897		
14'-0" (168") PRECAST	458*	316	493	635	778	922	1065	286	360
	548	378	629	922	1254	1567	1816		
14'-8" (176") PRESTRESSED	243	295	459	591	724	857	990	N.R.	357
	243	352	582	852	1156	1491	1742		
15'-4" (184") PRESTRESSED	228	278	430	553	677	801	925	N.R.	327
	228	329	542	791	1072	1381	1676		
17'-4" (208") PRESTRESSED	188	236	361	464	567	670	774	N.R.	255
	188	276	449	649	874	1121	1389		
19'-4" (232") PRESTRESSED	165	207	313	401	490	578	667	N.R.	204
	165	239	383	550	736	940	1160		
21'-4" (256") PRESTRESSED	145	186	278	356	433	512	590	N.R.	172
	142	212	336	477	635	807	993		
22'-0" (264") PRESTRESSED	140	180	268	343	418	493	568	N.R.	161
	137	205	322	457	607	771	947		
24'-0" (288") PRESTRESSED	127	165	244	312	380	447	515	N.R.	135
	124	186	290	408	538	680	833		

*REDUCE VALUE BY 25% FOR GRADE 40 FIELD REBAR

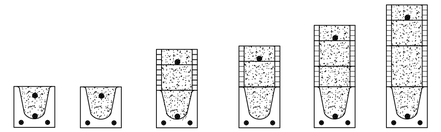

TYPE DESIGNATION

F = FILLED WITH GROUT / U = UNFILLED

QUANTITY OF #5 REBAR AT BOTTOM OF LINTEL CAVITY

8F16-1B/1T

NOMINAL WIDTH
NOMINAL HEIGHT

QUANTITY OF #5 REBAR AT TOP

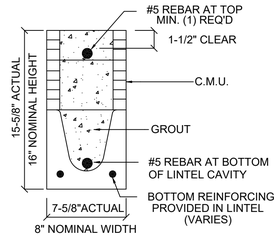

MATERIALS

1. f'c precast lintels = 3500 psi.
2. f'c prestressed lintels = 6000 psi.
3. f'c grout = 3000 psi w/ maximum 3/8" aggregate.
4. Concrete masonry units (CMU) per ASTM C90 w/ minimum net area compressive strength = 1900 psi.
5. Rebar provided in precast lintel per ASTM A615 GR60. Field rebar per ASTM A615 GR40 or GR60.
6. Prestressing strand per ASTM A416 grade 270 low relaxation.
7. 7/32 wire per ASTM A510.
8. Mortar per ASTM C270 type M or S.

GENERAL NOTES

1. Provide full mortar head and bed joints.
2. Shore filled lintels as required.
3. Installation of lintel must comply with the architectural and/or structural drawings.
4. Lintels are manufactured with 5-1/2" long notches at the ends to accommodate vertical cell reinforcing and grouting.
5. All lintels meet or exceed L/360 vertical deflection, except lintels 17'-4" and longer with a nominal height of 8" meet or exceed L/180.
6. Bottom field added rebar to be located at the bottom of the lintel cavity.
7. 7/32" diameter wire stirrups are welded to the bottom steel for mechanical anchorage.
8. Cast-in-place concrete may be provided in composite lintel in lieu of concrete masonry units.
9. Safe load ratings based on rational design analysis per ACI 318 and ACI 530

SAFE LOAD TABLE NOTES

1. All values based on minimum 4" bearing. Exception: Safe loads for unfilled lintels must be reduced by 20% if bearing length is less than 6-1/2". Safe loads for all recessed lintels based on 8" nominal bearing.
2. N.R. = Not Rated.
3. Safe loads are total superimposed allowable load on the section specified.
4. Safe loads based on grade 40 or grade 60 field rebar.
5. Additional lateral load capacity can be obtained by the designer by providing addional reinforced masonry above the precast lintel.
6. One #7 rebar may be substituted for two #5 rebars in 8" lintels only.
7. The designer may evaluate concentrated loads from the safe load tables by calculating the maximum resisting moment and shear at d-away from the face of support.
8. For composite lintel heights not shown, use safe load from next lower height.
9. All safe loads in units of pounds per linear foot.

8" PRECAST W/ 2" RECESS DOOR U-LINTELS

LENGTH \ TYPE	UPLIFT							LATERAL	
	8RF6-1T	8RF10-1T	8RF14-1T	8RF18-1T	8RF22-1T	8RF26-1T	8RF30-1T	8RU6	8RF6
	8RF6-2T	8RF10-2T	8RF14-2T	8RF18-2T	8RF22-2T	8RF26-2T	8RF30-2T		
4'-4" (52") PRECAST	1244	1573	2413	3260	4112	4967	5825	932	932
	1244	1519	2339	3170	4008	4850	5696		
4'-6" (54") PRECAST	1192	1507	2311	3121	3937	4756	5577	853	853
	1192	1455	2240	3036	3837	4643	5453		
5'-8" (68") PRECAST	924*	1172	1795	2423	3055	3689	4325	501	501
	924	1132	1741	2357	2978	3603	4230		
5'-10" (70") PRECAST	896*	1138	1742	2352	2965	3581	4198	469	469
	896	1099	1690	2288	2891	3497	4106		
6'-8" (80") PRECAST	778	882	1513	2042	2573	3107	3642	830	1100
	778	956	1468	1987	2509	3035	3563		
7'-6" (90") PRECAST	688	697	1325	1810	2280	2753	3227	710	941
	688	849	1302	1762	2225	2690	3157		
9'-8" (116") PRECAST	533*	433	808	1123	1413	1704	1995	516	614
	533	527	1009	1369	1728	2088	2450		

*REDUCE VALUE BY 25% FOR GRADE 40 FIELD REBAR

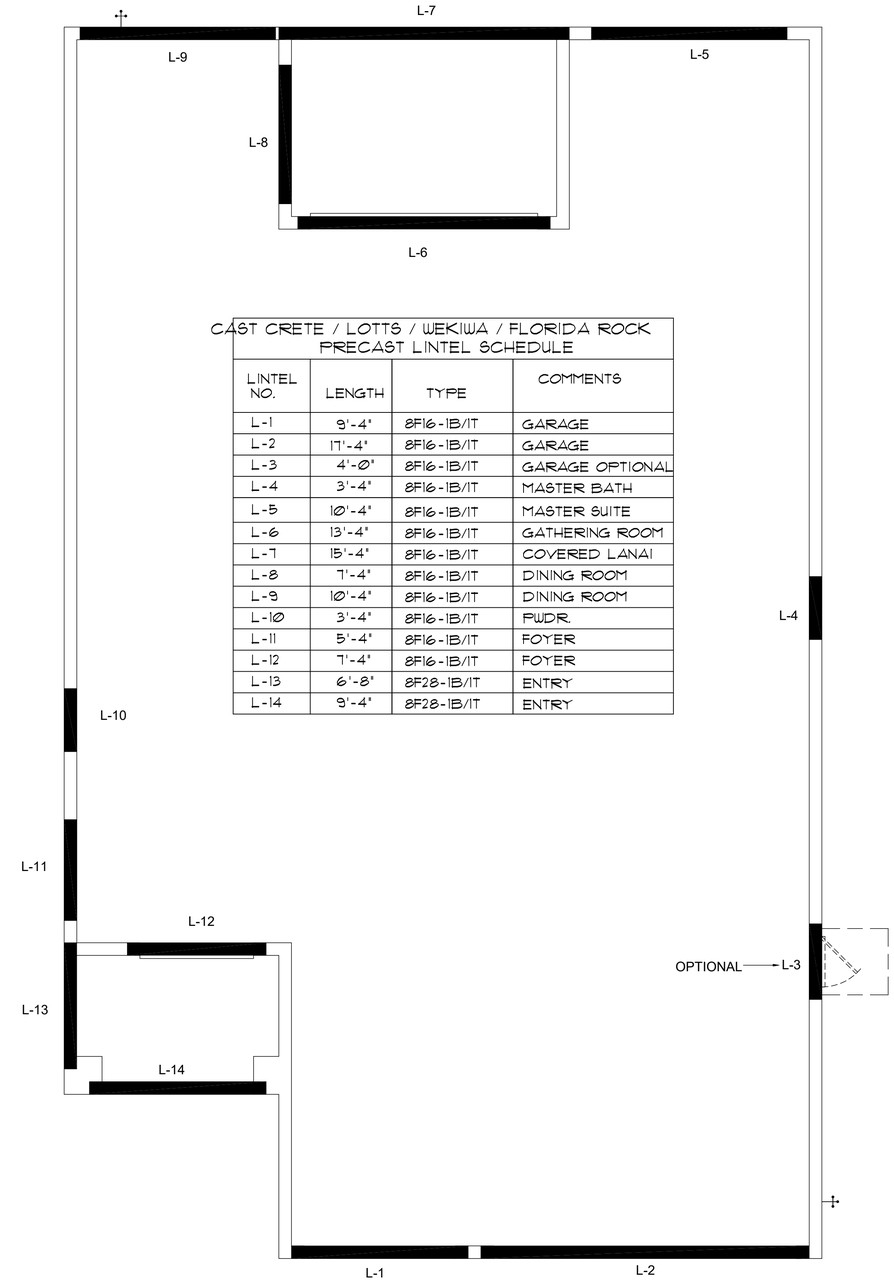

CAST CRETE / LOTTS / WEKIWA / FLORIDA ROCK PRECAST LINTEL SCHEDULE

LINTEL NO.	LENGTH	TYPE	COMMENTS
L-1	9'-4"	8F16-1B/1T	GARAGE
L-2	17'-4"	8F16-1B/1T	GARAGE
L-3	4'-0"	8F16-1B/1T	GARAGE OPTIONAL
L-4	3'-4"	8F16-1B/1T	MASTER BATH
L-5	10'-4"	8F16-1B/1T	MASTER SUITE
L-6	13'-4"	8F16-1B/1T	GATHERING ROOM
L-7	15'-4"	8F16-1B/1T	COVERED LANAI
L-8	7'-4"	8F16-1B/1T	DINING ROOM
L-9	10'-4"	8F16-1B/1T	DINING ROOM
L-10	3'-4"	8F16-1B/1T	PWDR.
L-11	5'-4"	8F16-1B/1T	FOYER
L-12	7'-4"	8F16-1B/1T	FOYER
L-13	6'-8"	8F28-1B/1T	ENTRY
L-14	9'-4"	8F28-1B/1T	ENTRY

PRECAST LINTEL PLAN

C (STANDARD)

1/8"=1'-0" (11x17) 1/4"=1'-0" (22x34)

THOMPSON ENGINEERING GROUP, INC.
4401 Vineland Road Suite A6 Orlando, FL 32811
Ph: (407) 734-1450
Fax: (407) 734-1790
www.tegfl.com

MJS designers group
residential·commercial·architecture
815 Orienta Ave. Suite# 1040
Altamonte Springs, FL. 32701
Ph: (407) 629-6711
Fax: (407) 629-6776
www.mjshomedesigns.com

WRITTEN DIMENSIONS SHALL HAVE PRECEDENCE OVER SCALE DIMENSIONS.
Contractors shall verify and be responsible for all dimensions and conditions of the job and MJS, Inc. must be notified in writing of any changes in the dimensions, conditions and specifications appearing on these plans.

40-2922

LARGO (WS)
Lot # - Subdivision
Street Address
City, State, Zip

A division of Park Square Enterprises Inc.
5200 Vineland Rd. Suite #200
Orlando, Fl. 32811
Phone: (407) 529-3000

Park Square HOMES

ISSUE DATE	08/27/2020
REVISIONS	
PROJECT:	00-0000
SCALE:	AS NOTED
DRAWN BY:	S.B.
DESIGNED BY:	MJS

PRECAST LINTEL PLAN & NOTES C (STANDARD)

S2.C

© COPYRIGHT 2016 PARK SQUARE HOMES HEREBY RESERVES ITS COMMON LAW COPYRIGHTS IN THESE PLANS, IDEAS AND DESIGN. THESE PLANS, IDEAS AND DESIGNS ARE NOT TO BE COPIED OR MODIFIED IN ANY MATTER OR FORM WHATSOEVER, NOR ARE THEY TO BE ASSIGNED TO ANY THIRD PARTY WITHOUT FIRST OBTAINING THE EXPRESS WRITTEN PERMISSION FROM PARK SQUARE HOMES.

CONNECTOR SCHEDULE

CONNECT. TYPE	SIMPSON DESCRIPTION	SIMPSON FASTENERS PER CONNECTOR	MAX. UPLIFT	LAT. LDS. F1 / F2
4	HETA16	9-10d x 1½"	1,810	65 / 960
5	DETAL20	18-10d x 1½"	2,480	2000/ 1370
20	H3	RFT: 4-8d / PLT: 4-8d	455	125 / 160
21	H1	RFT:6-8dx1½"/PLT:4-8d	475	485 / 165
22	H10S	RFT: 8-8d x 1½" PLT: 8-8d x 1½"	1010	660/550
23	LUS26	HDR: 4-10d/JST: 4-10d	935	N/A
24	H7	RFT / TRS: 4-8d PLT / STD: 10-8d	985	400 / N/A
26	H2.5	RFT:5-8d / PLT: 5-8d	415	150 / 150
34	A34	H:4-8dx1½"/P:4-8dx1½"	365	280 / 303
35	A35F	H:4-8dx1½"/P:4-8dx1½"	440	440 / N/A
37	HTS16	14-10d	1,310	N/A
38	MTS16	14-10d	1,000	N/A
39	MTS30	14-10d	1000	N/A
43	LSTA12	10-10d	905	N/A
45	ST18	14-16d	1,200	N/A
47	LSTA24	18-10d	1,295	N/A
71	MSTA36	26-10d	2,135	N/A
72	MSTC66	64-16d SINKERS	5,495	N/A
79	SP1	STD:6-10d / PLT:4-10d	535	560 / 260
80	SP2	STD:6-10d / PLT:6-10d	605	560 / 260
81	SPH4,6,8	12-10d x 1½"	885	N/A
90	ABU66	12-16d	2,240	N/A
89	CB66	(2) 7/8" BOLTS	2,300	985
92	ABU44	12-16d	2,200	N/A
93	AC6 (MAX)	28-16d	1,815	1,070
94	AC4 (MAX)	28-16d	1,815	1,070
95	HTS20	20-10d	1,450	N/A
96	HD8A	SILL: 7/8" BOLT STUD:(3) 7/8"X5½" BOLTS	7,910	N/A
97	MTSM16	BLOCK: 4-¼"X2¼" TC JOIST : 7-10d	860	N/A
98	HTT4	SILL: 7/8" BOLT STRAP: 18-16d	4,235	N/A
99	A35	H:4-8dx1½"/P:4-8dx1½"	440	440 / N/A
102	HTT5	7/8" BOLT/ 26-10d	4,275	N/A
103	VGTR/L	32-SDS¼"X3"/(2) 7/8" BLT	3,990	N/A
104	HDU8-SDS2.5	7/8" BLT/20-SDS ¼"x2½"	5,020	N/A
110	HCP2	12-10d x 1½"	520	260 / N/A
167	HHUS46	H:14-16d/J:6-16d	1,550	N/A
168	U46	H:8-10d/J:4-10d	710	N/A
181	HUS26	20-16d	1,550	N/A
184	HUC28-2	H:14-16d/J:4-10d	1,085	N/A
214	HUC212-3TF	HD:16-3/16"X1½" TAPCON BM: 6-16d	1,135	N/A
215	HGUS210-2	HDR:46-16d/JST:10-16d	2,720	N/A
216	HUS412	BLOCK: 10-¼"X1½" TC JOIST : 10-16d	3,240	N/A
217	HUS212-2	BLOCK: 10-¼"X1½" TC JOIST : 10-16d	2,630	N/A
219	MBHA412	H:1-ATR3/4X8 TOP&FACE JOIST: 18-10d	3,145	N/A
220	N/A	N/A	1,620	N/A
226	MBHA4.75/12	HDR : (2) 3/4" φ x 8" JOIST : 18-10d	2,160	N/A
231	MBHA3.56/16	HDR : (2) 3/4" φ x 8" JOIST : 18-10d	3,450	N/A
232	MBHA5.50/16	HDR : (2) 3/4" φ x 8" JOIST : 18-10d	3,450	N/A
240	H16	R:2-10dx1½"P:10-10dx1½"	1,470	480 / N/A
241	LGT2	30-16d-sinker	2000	1015 / 440
301	MGT	(1) 5/8"BLTS./GIR: 22-10d	3,965	N/A
302	HGT-2 or 3	LTL:3/4"BLTS./GIR: 8-10d	6485	N/A
303	HGT-4	LTL:3/4"BLTS./GIR: 16-10d	9,250	N/A
401	SUR/L414	FACE:18-16d/JST:8-16d	1,700	N/A
T	CONNECTORS TO BE SPECIFIED & PROVIDED BY TRUSS MANUFACTURERS			

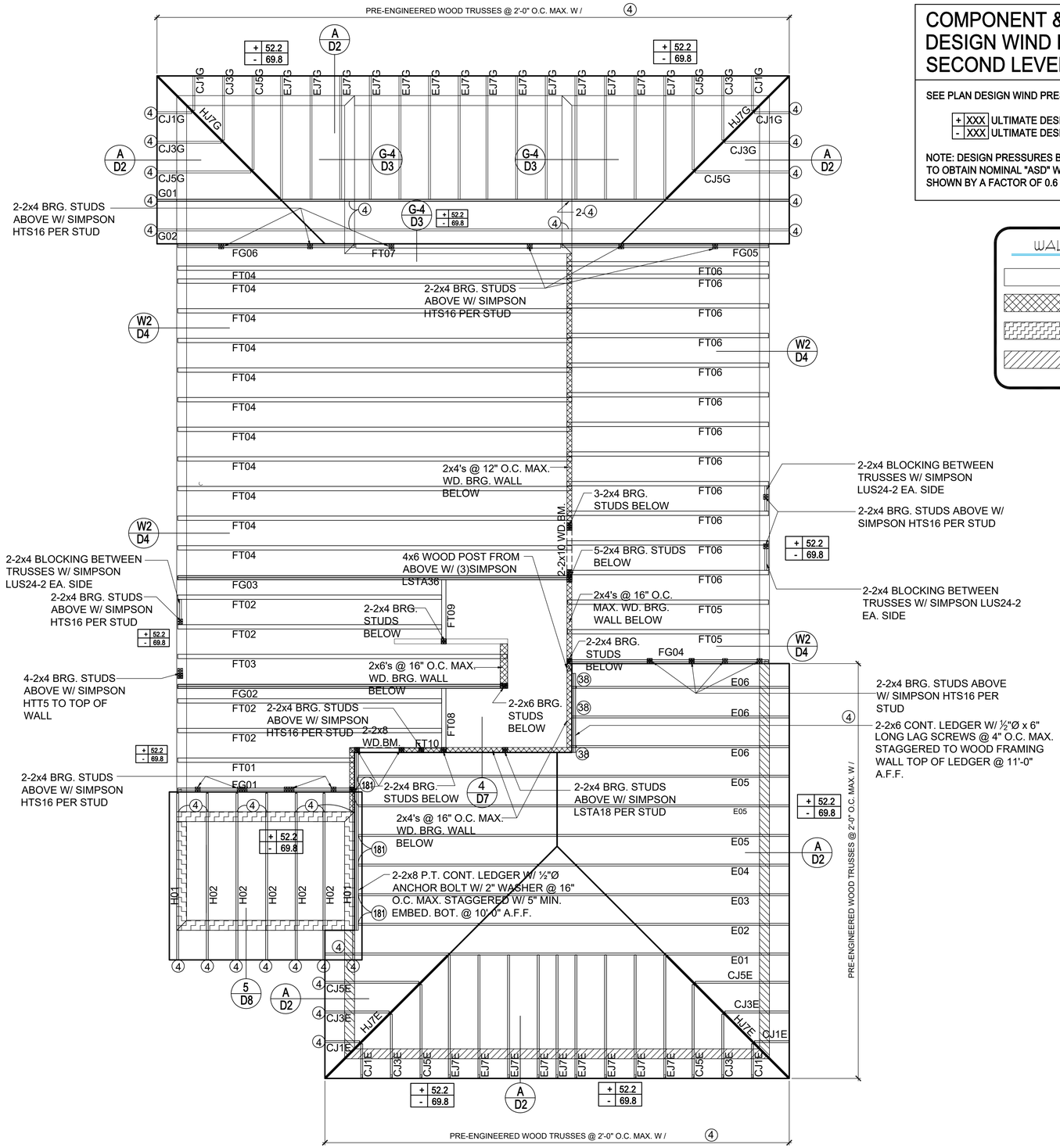

COMPONENT & CLADDING DESIGN WIND PRESSURES SECOND LEVEL

SEE PLAN DESIGN WIND PRESSURE

+ XXX	ULTIMATE DESIGNED POSITIVE PRESSURE
- XXX	ULTIMATE DESIGNED NEGATIVE PRESSURE

NOTE: DESIGN PRESSURES BASED ULTIMATE WIND SPEED TO OBTAIN NOMINAL "ASD" WIND PRESSURES MULTIPLY VALUES SHOWN BY A FACTOR OF 0.6

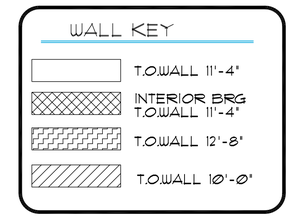

2nd FLOOR & LOW ROOF FRAMING PLAN

A (STANDARD)

1/8"=1'-0" (11x17) 1/4"=1'-0" (22x37)

THOMPSON ENGINEERING GROUP, INC.
4401 Vineland Road Suite A6 Orlando, FL 32811
Ph: (407) 734-1450
Fax: (407) 734-1790
www.tegfl.com

MJS designers group
residential·commercial·architecture
815 Orienta Ave. Suite# 1040
Altamonte Springs, FL. 32701
Ph: (407) 629-6711
Fax: (407) 629-6776
www.mjshomedesigns.com

WRITTEN DIMENSIONS SHALL HAVE PRECEDENCE OVER SCALE DIMENSIONS.
Contractors shall verify and be responsible for all dimensions and conditions of the job and MJS, Inc. must be notified in writing of any changes in the dimensions, conditions and specifications appearing on these plans.

40-2922

LARGO (WS)
Lot # - Subdivision
Street Address
City, State, Zip

A division of Park Square Enterprises Inc.
5200 Vineland Rd. Suite #200
Orlando, Fl. 32811
Phone: (407) 529-3000
Park Square HOMES

ISSUE DATE	08/27/2020
REVISIONS	
PROJECT:	00-0000
SCALE:	AS NOTED
DRAWN BY:	S.B.
DESIGNED BY:	MJS

2ND FLOOR & LOW ROOF FRAMING PLAN
A (STANDARD)

S3.A

© COPYRIGHT 2016 PARK SQUARE HOMES HEREBY RESERVES ITS COMMON LAW COPYRIGHTS IN THESE PLANS, IDEAS AND DESIGNS. THESE PLANS, IDEAS AND DESIGNS ARE NOT TO BE COPIED OR MODIFIED IN ANY MATTER, OR FORM WHATSOEVER, NOR ARE THEY TO BE ASSIGNED TO ANY THIRD PARTY WITHOUT FIRST OBTAINING THE EXPRESS WRITTEN PERMISSION FROM PARK SQUARE HOMES.

CONNECTOR SCHEDULE

CONNECT. TYPE	SIMPSON DESCRIPTION	SIMPSON FASTENERS PER CONNECTOR	MAX. UPLIFT	LAT. LDS. F1 / F2
4	HETA16	9-10d x 1½"	1,810	65 / 960
5	DETAL20	18-10d x 1½"	2,480	2000/ 1370
20	H3	RFT: 4-8d / PLT: 4-8d	455	125 / 160
21	H1	RFT:6-8dx1½"/PLT:4-8d	475	485 / 165
22	H10S	RFT: 8-8d x 1½" PLT: 8-8d x 1½"	1010	660/550
23	LUS26	HDR: 4-10d/JST: 4-10d	935	N/A
24	H7	RFT / TRS: 4-8d PLT / STD: 10-8d	985	400 / N/A
26	H2.5	RFT:5-8d / PLT: 5-8d	415	150 / 150
34	A34	H:4-8dx1½"/P:4-8dx1½"	365	280 / 303
35	A35F	H:4-8dx1½"/P:4-8dx1½"	440	440 / N/A
37	HTS16	14-10d	1,310	N/A
38	MTS16	14-10d	1,000	N/A
39	MTS30	14-10d	1000	N/A
43	LSTA12	10-10d	905	N/A
45	ST18	14-16d	1,200	N/A
47	LSTA24	18-10d	1,295	N/A
71	MSTA36	26-10d	2,135	N/A
72	MSTC66	64-16d SINKERS	5,495	N/A
79	SP1	STD:6-10d / PLT:4-10d	535	560 / 260
80	SP2	STD:6-10d / PLT:6-10d	605	560 / 260
81	SPH4,6,8	12-10d x 1½"	885	N/A
90	ABU66	12-16d	2,240	N/A
89	CB66	(2) 7/8" BOLTS	2,300	985
92	ABU44	12-16d	2,200	N/A
93	AC6 (MAX)	28-16d	1,815	1,070
94	AC4 (MAX)	28-16d	1,815	1,070
95	HTS20	20-10d	1,450	N/A
96	HD8A	SILL: 7/8" BOLT STUD:(3) 7/8"X5½" BOLTS	7,910	N/A
97	MTSM16	BLOCK: 4-¼"X2¼" TC JOIST : 7-10d	860	N/A
98	HTT4	SILL: 7/8" BOLT STRAP: 18-16d	4,235	N/A
99	A35	H:4-8dx1½"/P:4-8dx1½"	440	440 / N/A
102	HTT5	7/8" BOLT/ 26-10d	4,275	N/A
103	VGTR/L	32-SDS¼"X3"/(2) 7/8" BLT	3,990	N/A
104	HDU8-SDS2.5	7/8" BLT/20-SDS ¼"x2½"	5,020	N/A
110	HCP2	12-10d x 1½"	520	260 / N/A
167	HHUS46	H:14-16d/J:6-16d	1,550	N/A
168	U46	H:8-10d/J:4-10d	710	N/A
181	HUS26	20-16d	1,550	N/A
184	HUC28-2	H:14-16d/J:4-10d	1,085	N/A
214	HUC212-3TF	HD:16-3/16"X1½" TAPCON BM: 6-16d	1,135	N/A
215	HGUS210-2	HDR:46-16d/JST:10-16d	2,720	N/A
216	HUS412	BLOCK: 10-¼"X1½" TC JOIST : 10-16d	3,240	N/A
217	HUS212-2	BLOCK: 10-¼"X1½" TC JOIST : 10-16d	2,630	N/A
219	MBHA412	H:1-ATR3/4X8 TOP&FACE JOIST: 18-10d	3,145	N/A
220	N/A	N/A	1,620	N/A
226	MBHA4.75/12	HDR : (2) 3/4" φ x 8" JOIST : 18-10d	2,160	N/A
231	MBHA3.56/16	HDR : (2) 3/4" φ x 8" JOIST : 18-10d	3,450	N/A
232	MBHA5.50/16	HDR : (2) 3/4" φ x 8" JOIST : 18-10d	3,450	N/A
240	H16	R:2-10dx1½"P:10-10dx1½"	1,470	480 / N/A
241	LGT2	30-16d-sinker	2000	1015 / 440
301	MGT	(1) 5/8"BLTS./GIR: 22-10d	3,965	N/A
302	HGT-2 or 3	LTL:3/4"BLTS./GIR: 8-10d	6485	N/A
303	HGT-4	LTL:3/4"BLTS./GIR: 16-10d	9,250	N/A
401	SUR/L414	FACE:18-16d/JST:8-16d	1,700	N/A
T	CONNECTORS TO BE SPECIFIED & PROVIDED BY TRUSS MANUFACTURERS			

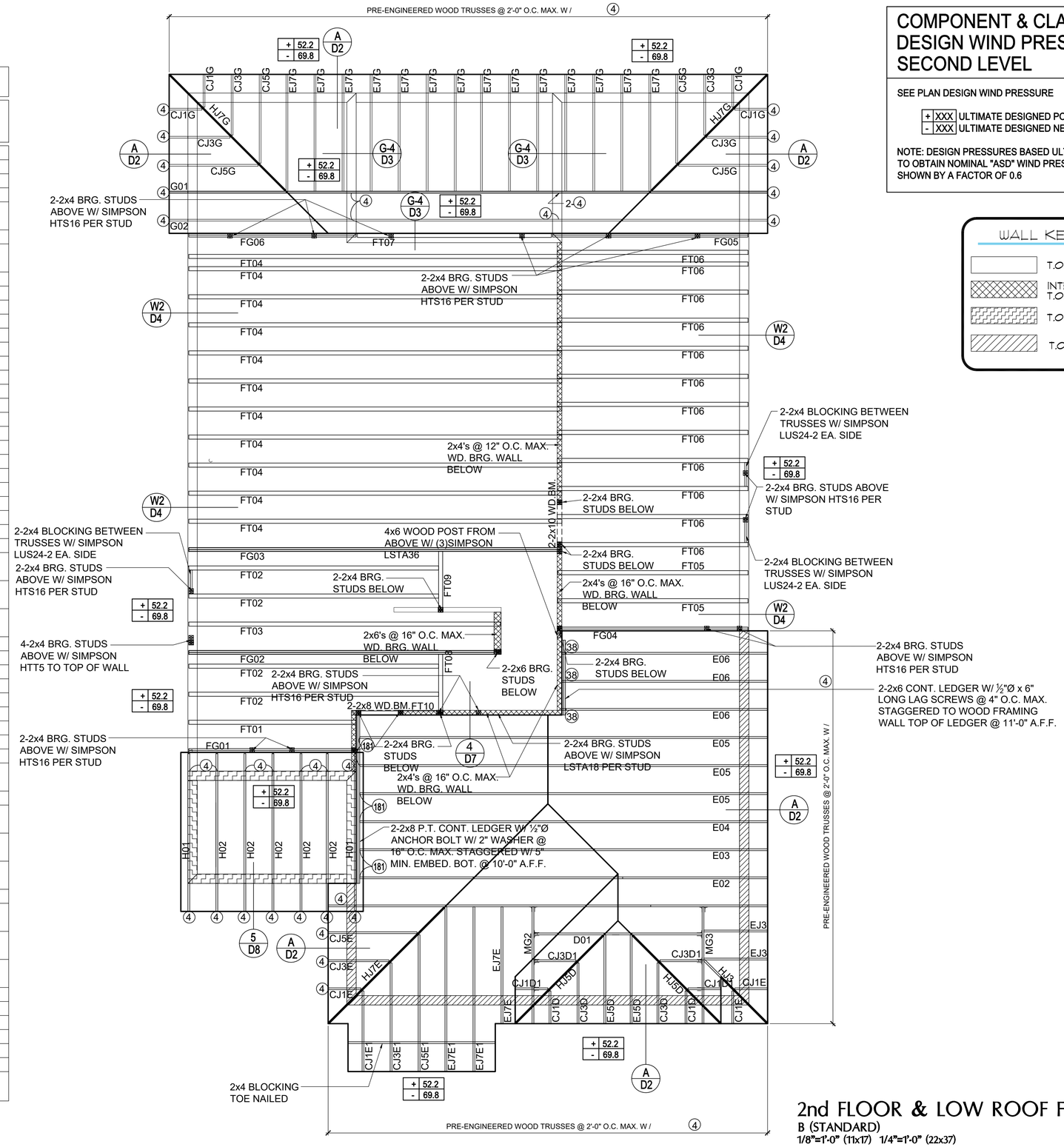

COMPONENT & CLADDING DESIGN WIND PRESSURES SECOND LEVEL

SEE PLAN DESIGN WIND PRESSURE

+ XXX ULTIMATE DESIGNED POSITIVE PRESSURE
- XXX ULTIMATE DESIGNED NEGATIVE PRESSURE

NOTE: DESIGN PRESSURES BASED ULTIMATE WIND SPEED TO OBTAIN NOMINAL "ASD" WIND PRESSURES MULTIPLY VALUES SHOWN BY A FACTOR OF 0.6

WALL KEY

- T.O.WALL 11'-4"
- INTERIOR BRG T.O.WALL 11'-4"
- T.O.WALL 12'-0"
- T.O.WALL 10'-0"

2nd FLOOR & LOW ROOF FRAMING PLAN

B (STANDARD)

1/8"=1'-0" (11x17) 1/4"=1'-0" (22x37)

THOMPSON ENGINEERING GROUP, INC.
4401 Vineland Road Suite A6 Orlando, FL 32811
Ph: (407) 734-1450
Fax: (407) 734-1790
www.tegfl.com

MJS designers group
residential•commercial•architecture
815 Orienta Ave. Suite# 1040
Altamonte Springs, FL. 32701
Ph: (407) 629-6711
Fax: (407) 629-6776
www.mjshomedesigns.com

WRITTEN DIMENSIONS SHALL HAVE PRECEDENCE OVER SCALE DIMENSIONS.
Contractors shall verify and be responsible for all dimensions and conditions of the job and MJS, Inc. must be notified in writing of any changes in the dimensions, conditions and specifications appearing on these plans.

40-2922

LARGO (WS)
Lot # - Subdivision
Street Address
City, State. Zip

A division of Park Square Enterprises Inc.
5200 Vineland Rd. Suite #200
Orlando, Fl. 32811
Phone: (407) 529-3000

ISSUE DATE	08/27/2020
REVISIONS	
PROJECT:	00-0000
SCALE:	AS NOTED
DRAWN BY:	S.B.
DESIGNED BY:	MJS

2ND FLOOR & LOW ROOF FRAMING PLAN
B (STANDARD)

S3.B

© COPYRIGHT 2016 PARK SQUARE HOMES HEREBY RESERVES ITS COMMON LAW COPYRIGHTS IN THESE PLANS, IDEAS AND DESIGN. THESE PLANS, IDEAS AND DESIGNS ARE NOT TO BE COPIED OR MODIFIED IN ANY MATTER OR FORM WHATSOEVER, NOR ARE THEY TO BE ASSIGNED TO ANY THIRD PARTY WITHOUT FIRST OBTAINING THE EXPRESS WRITTEN PERMISSION FROM PARK SQUARE HOMES.

CONNECTOR SCHEDULE

CONNECT. TYPE	SIMPSON DESCRIPTION	SIMPSON FASTENERS PER CONNECTOR	MAX. UPLIFT	LAT. LDS. F1 / F2
4	HETA16	9-10d x 1½"	1,810	65 / 960
5	DETAL20	18-10d x 1½"	2,480	2000/ 1370
20	H3	RFT: 4-8d / PLT: 4-8d	455	125 / 160
21	H1	RFT:6-8dx1½"/PLT:4-8d	475	485 / 165
22	H10S	RFT: 8-8d x 1½" PLT: 8-8d x 1½"	1010	660/550
23	LUS26	HDR: 4-10d/JST: 4-10d	935	N/A
24	H7	RFT / TRS: 4-8d PLT / STD: 10-8d	985	400 / N/A
26	H2.5	RFT:5-8d / PLT: 5-8d	415	150 / 150
34	A34	H:4-8dx1½"/P:4-8dx1½"	365	280 / 303
35	A35F	H:4-8dx1½"/P:4-8dx1½"	440	440 / N/A
37	HTS16	14-10d	1,310	N/A
38	MTS16	14-10d	1,000	N/A
39	MTS30	14-10d	1000	N/A
43	LSTA12	10-10d	905	N/A
45	ST18	14-16d	1,200	N/A
47	LSTA24	18-10d	1,295	N/A
71	MSTA36	26-10d	2,135	N/A
72	MSTC66	64-16d SINKERS	5,495	N/A
79	SP1	STD:6-10d / PLT:4-10d	535	560 / 260
80	SP2	STD:6-10d / PLT:6-10d	605	560 / 260
81	SPH4,6,8	12-10d x 1½"	885	N/A
90	ABU66	12-16d	2,240	N/A
89	CB66	(2) 7/8" BOLTS	2,300	985
92	ABU44	12-16d	2,200	N/A
93	AC6 (MAX)	28-16d	1,815	1,070
94	AC4 (MAX)	28-16d	1,815	1,070
95	HTS20	20-10d	1,450	N/A
96	HD8A	SILL: 7/8" BOLT STUD:(3) 7/8"X5½" BOLTS	7,910	N/A
97	MTSM16	BLOCK: 4-¼"X2¼" TC JOIST : 7-10d	860	N/A
98	HTT4	SILL: 7/8" BOLT STRAP: 18-16d	4,235	N/A
99	A35	H:4-8dx1½"/P:4-8dx1½"	440	440 / N/A
102	HTT5	7/8" BOLT/ 26-10d	4,275	N/A
103	VGTR/L	32-SDS¼"X3"/(2) 7/8" BLT	3,990	N/A
104	HDU8-SDS2.5	7/8" BLT/20-SDS ¼"x2½"	5,020	N/A
110	HCP2	12-10d x 1½"	520	260 / N/A
167	HHUS46	H:14-16d/J:6-16d	1,550	N/A
168	U46	H:8-10d/J:4-10d	710	N/A
181	HUS26	20-16d	1,550	N/A
184	HUC28-2	H:14-16d/J:4-10d	1,085	N/A
214	HUC212-3TF	HD:16-3/16"X1½" TAPCON BM: 6-16d	1,135	N/A
215	HGUS210-2	HDR:46-16d/JST:10-16d	2,720	N/A
216	HUS412	BLOCK: 10-¼"X1½" TC JOIST : 10-16d	3,240	N/A
217	HUS212-2	BLOCK: 10-¼"X1½" TC JOIST : 10-16d	2,630	N/A
219	MBHA412	H:1-ATR3/4X8 TOP&FACE JOIST: 18-10d	3,145	N/A
220	N/A	N/A	1,620	N/A
226	MBHA4.75/12	HDR : (2) 3/4" φ x 8" JOIST : 18-10d	2,160	N/A
231	MBHA3.56/16	HDR : (2) 3/4" φ x 8" JOIST : 18-10d	3,450	N/A
232	MBHA5.50/16	HDR : (2) 3/4" φ x 8" JOIST : 18-10d	3,450	N/A
240	H16	R:2-10dx1½"P:10-10dx1½"	1,470	480 / N/A
241	LGT2	30-16d-sinker	2000	1015 / 440
301	MGT	(1) 5/8"BLTS./GIR: 22-10d	3,965	N/A
302	HGT-2 or 3	LTL:3/4"BLTS./GIR: 8-10d	6485	N/A
303	HGT-4	LTL:3/4"BLTS./GIR: 16-10d	9,250	N/A
401	SUR/L414	FACE:18-16d/JST:8-16d	1,700	N/A
T	CONNECTORS TO BE SPECIFIED & PROVIDED BY TRUSS MANUFACTURERS			

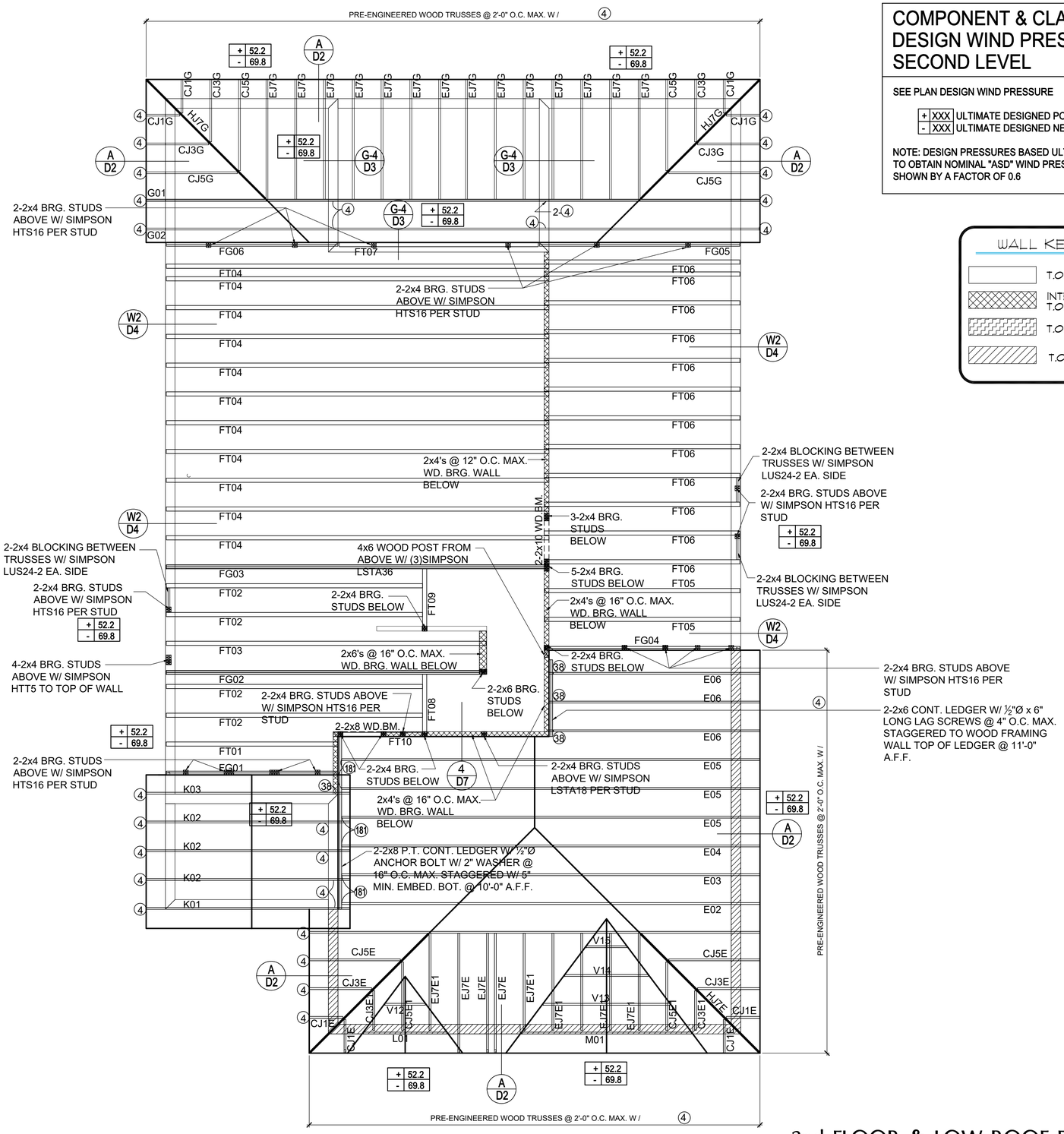

COMPONENT & CLADDING DESIGN WIND PRESSURES SECOND LEVEL

SEE PLAN DESIGN WIND PRESSURE

+ XXX	ULTIMATE DESIGNED POSITIVE PRESSURE
- XXX	ULTIMATE DESIGNED NEGATIVE PRESSURE

NOTE: DESIGN PRESSURES BASED ULTIMATE WIND SPEED TO OBTAIN NOMINAL "ASD" WIND PRESSURES MULTIPLY VALUES SHOWN BY A FACTOR OF 0.6

WALL KEY

- T.O.WALL 11'-4"
- INTERIOR BRG T.O.WALL 11'-4"
- T.O.WALL 12'-0"
- T.O.WALL 10'-0"

2nd FLOOR & LOW ROOF FRAMING PLAN

C (STANDARD)

1/8"=1'-0" (11x17) 1/4"=1'-0" (22x37)

THOMPSON ENGINEERING GROUP, INC.
4401 Vineland Road Suite A6 Orlando, FL 32811
Ph: (407) 734-1450
Fax: (407) 734-1790
www.tegfl.com

MJS designers group
residential•commercial•architecture
815 Orienta Ave. Suite# 1040
Altamonte Springs, FL. 32701
Ph: (407) 629-6711
Fax: (407) 629-6776
www.mjshomedesigns.com

Park Square HOMES
A division of Park Square Enterprises Inc.
5200 Vineland Rd. Suite #200
Orlando, Fl. 32811
Phone: (407) 529-3000

WRITTEN DIMENSIONS SHALL HAVE PRECEDENCE OVER SCALE DIMENSIONS. Contractors shall verify and be responsible for all dimensions and conditions of the job and M.S. Inc. must be notified in writing of any changes in the dimensions, conditions and specifications appearing on these plans.

© COPYRIGHT 2016 PARK SQUARE HOMES HEREBY RESERVES ITS COMMON LAW COPYRIGHTS IN THESE PLANS, IDEAS AND DESIGN. THESE PLANS, IDEAS AND DESIGNS ARE NOT TO BE COPIED OR MODIFIED IN ANY MATTER OR FORM WHATSOEVER, NOR ARE THEY TO BE ASSIGNED TO ANY THIRD PARTY WITHOUT FIRST OBTAINING THE EXPRESS WRITTEN PERMISSION FROM PARK SQUARE HOMES.

40-2922

LARGO (WS)
Lot # - Subdivision
Street Address
City, State. Zip

ISSUE DATE	08/27/2020
REVISIONS	
PROJECT:	00-0000
SCALE:	AS NOTED
DRAWN BY:	S.B.
DESIGNED BY:	MJS

2ND FLOOR & LOW ROOF FRAMING PLAN
C (STANDARD)

S3.C

CONNECTOR SCHEDULE

CONNECT. TYPE	SIMPSON DESCRIPTION	SIMPSON FASTENERS PER CONNECTOR	MAX. UPLIFT	LAT. LDS. F1 / F2
4	HETA16	9-10d x 1½"	1,810	65 / 960
5	DETAL20	18-10d x 1½"	2,480	2000/ 1370
20	H3	RFT: 4-8d / PLT: 4-8d	455	125 / 160
21	H1	RFT:6-8dx1½"/PLT:4-8d	475	485 / 165
22	H10S	RFT: 8-8d x 1½" PLT: 8-8d x 1½"	1010	660/550
23	LUS26	HDR: 4-10d/JST: 4-10d	935	N/A
24	H7	RFT / TRS: 4-8d PLT / STD: 10-8d	985	400 / N/A
26	H2.5	RFT:5-8d / PLT: 5-8d	415	150 / 150
34	A34	H:4-8dx1½"/P:4-8dx1½"	365	280 / 303
35	A35F	H:4-8dx1½"/P:4-8dx1½"	440	440 / N/A
37	HTS16	14-10d	1,310	N/A
38	MTS16	14-10d	1,000	N/A
39	MTS30	14-10d	1000	N/A
43	LSTA12	10-10d	905	N/A
45	ST18	14-16d	1,200	N/A
47	LSTA24	18-10d	1,295	N/A
71	MSTA36	26-10d	2,135	N/A
72	MSTC66	64-16d SINKERS	5,495	N/A
79	SP1	STD:6-10d / PLT:4-10d	535	560 / 260
80	SP2	STD:6-10d / PLT:6-10d	605	560 / 260
81	SPH4,6,8	12-10d x 1½"	885	N/A
90	ABU66	12-16d	2,240	N/A
89	CB66	(2) 7/8" BOLTS	2,300	985
92	ABU44	12-16d	2,200	N/A
93	AC6 (MAX)	28-16d	1,815	1,070
94	AC4 (MAX)	28-16d	1,815	1,070
95	HTS20	20-10d	1,450	N/A
96	HD8A	SILL: 7/8" BOLT STUD:(3) 7/8"X5⅛" BOLTS	7,910	N/A
97	MTSM16	BLOCK: 4-¼"X2¼" TC JOIST : 7-10d	860	N/A
98	HTT4	SILL: 7/8" BOLT STRAP: 18-16d	4,235	N/A
99	A35	H:4-8dx1½"/P:4-8dx1½"	440	440 / N/A
102	HTT5	7/8" BOLT/ 26-10d	4,275	N/A
103	VGTR/L	32-SDS¼"X3"/(2) 7/8" BLT	3,990	N/A
104	HDU8-SDS2.5	7/8" BLT/20-SDS ¼"x2½"	5,020	N/A
110	HCP2	12-10d x 1½"	520	260 / N/A
167	HHUS46	H:14-16d/J:6-16d	1,550	N/A
168	U46	H:8-10d/J:4-10d	710	N/A
181	HUS26	20-16d	1,550	N/A
184	HUC28-2	H:14-16d/J:4-10d	1,085	N/A
214	HUC212-3TF	HD:16-3/16"X1½" TAPCON BM: 6-16d	1,135	N/A
215	HGUS210-2	HDR:46-16d/JST:10-16d	2,720	N/A
216	HUS412	BLOCK: 10-¼"X1½" TC JOIST : 10-16d	3,240	N/A
217	HUS212-2	BLOCK: 10-¼"X1½" TC JOIST : 10-16d	2,630	N/A
219	MBHA412	H:1-ATR3/4X8 TOP&FACE JOIST: 18-10d	3,145	N/A
220	N/A	N/A	1,620	N/A
226	MBHA4.75/12	HDR : (2) 3/4" φ x 8" JOIST : 18-10d	2,160	N/A
231	MBHA3.56/16	HDR : (2) 3/4" φ x 8" JOIST : 18-10d	3,450	N/A
232	MBHA5.50/16	HDR : (2) 3/4" φ x 8" JOIST : 18-10d	3,450	N/A
240	H16	R:2-10dx1½"P:10-10dx1½"	1,470	480 / N/A
241	LGT2	30-16d-sinker	2000	1015 / 440
301	MGT	(1) 5/8"BLTS./GIR: 22-10d	3,965	N/A
302	HGT-2 or 3	LTL:3/4"BLTS./GIR: 8-10d	6485	N/A
303	HGT-4	LTL:3/4"BLTS./GIR: 16-10d	9,250	N/A
401	SUR/L414	FACE:18-16d/JST:8-16d	1,700	N/A
T	CONNECTORS TO BE SPECIFIED & PROVIDED BY TRUSS MANUFACTURERS			

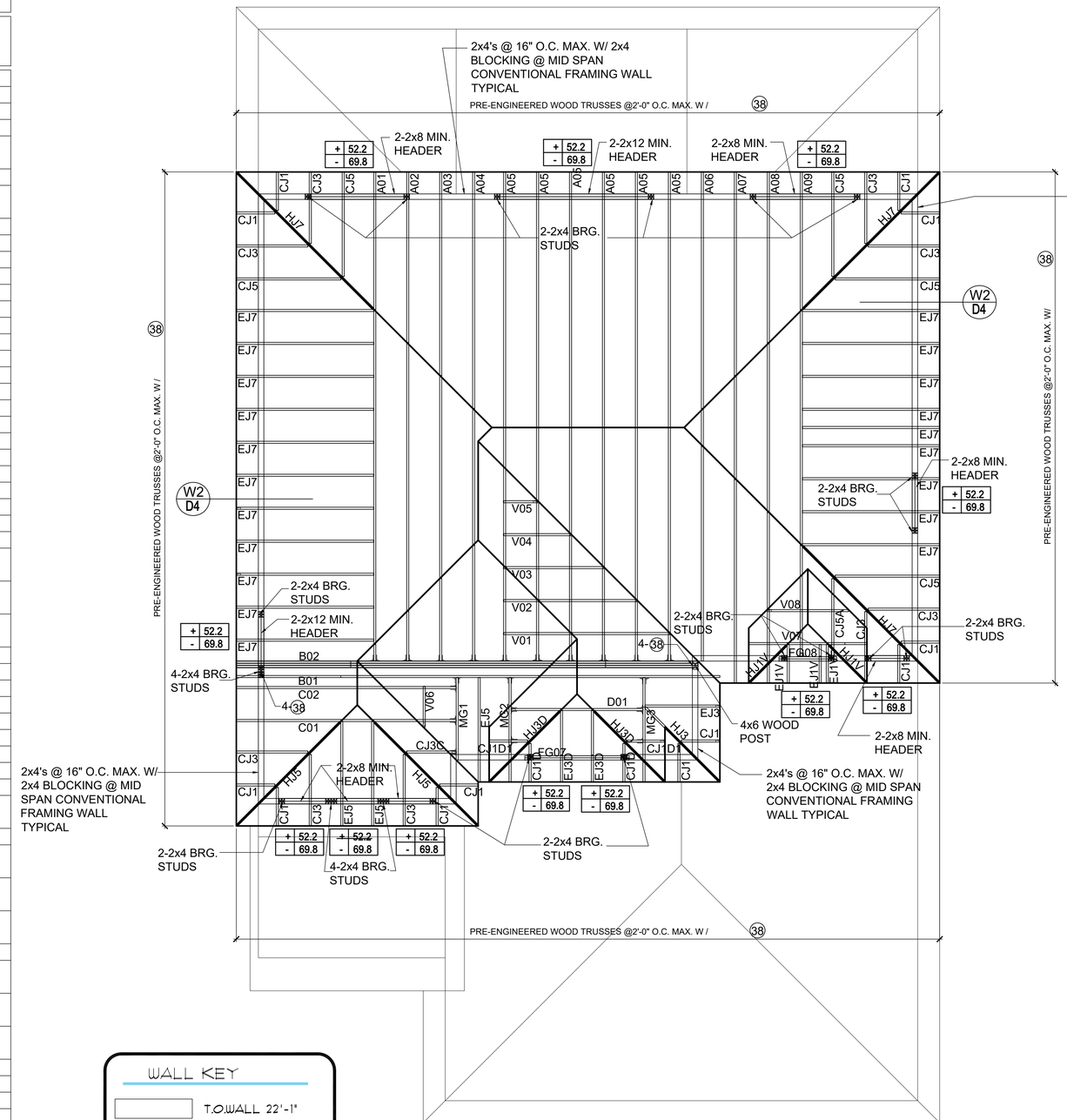

WALL KEY

T.O.WALL 22'-1"

HIGH ROOF FRAMING PLAN

A (STANDARD)

1/8"=1'-0" (11x17) 1/4"=1'-0" (22x34)

COMPONENT & CLADDING DESIGN WIND PRESSURES SECOND LEVEL

SEE PLAN DESIGN WIND PRESSURE

+	XXX	ULTIMATE DESIGNED POSITIVE PRESSURE
-	XXX	ULTIMATE DESIGNED NEGATIVE PRESSURE

NOTE: DESIGN PRESSURES BASED ULTIMATE WIND SPEED TO OBTAIN NOMINAL "ASD" WIND PRESSURES MULTIPLY VALUES SHOWN BY A FACTOR OF 0.6

NOTES

1. TYPICAL ROOF GABLE OVERHANG TO BE 12" UNLESS OTHERWISE NOTED.
2. TYPICAL ROOF EAVES OVERHANG TO BE 12" UNLESS OTHERWISE NOTED.
3. PROVIDE AND INSTALL FLASHING AND ROOFING AS PER NATIONAL ROOFING AND SHEET METAL ASSOC.STANDARDS AND/ OR ACCEPATBLE INDUSTRY PRACTICE AND IN ACCORDANCE WITH 6TH EDITION (2017)FLORIDA RESIDENTIAL CODE.
4. ALL ROOF TRUSSES, GIRDERS, BEAMS, HEADERS, ETC. TO BE SIZE BY TRUSS MANUFACTURER OR FL.REG.ENG.
5. TRUSSES SHALL BE BRACED TO PREVENT ROTATION & PROVIDE LATERAL STABILITY KIN ACCORDANCE WITH THE REQUIREMENTS SPECIFIED IN THE CONSTRUCTION DOCUMENTS FOR BUILDING & ON THE INDIVIDUAL TRUSS DESIGN DRAWINGS IN THE ABSENCE OF SPECIFIC BRACING REQUIREMENTS, TRUSSES SHALL BE BRACED IN ACCORDANCE WITH TPI/WTCA BCSI 1.
6. REFER TO TRUSS MANUFACTURERS DRAWINGS FOR TRUSS PLACEMENT & TRUSS TO TRUSS CONNECTIONS.
7. SHINGLE ROOF : UNDERLAYMENT TO BE INSTALLED IAW FBCR 2017, 6TH EDITION R905.1.1.
   UNDERLAYMENT MATERIALS REQUIRED TO COMPLY WITH ASTM D226, D1970, D4869 AND D6757 SHALL BEAR A LABEL INDICATING COMPLIANCE TO THE STANDARD DESIGNATION AND, IF APPLICABL, TYPE CLASSIFICATION INDICATED IN TABLE R905.1.1 UNDERLAYMENT SHALL BE APPLIED AND ATTACHED IN ACCORDANCE WITH TABLE R905.1.1.
8. OFF RIDGE VENTS MAXIMUM OPENING SIZES:
   - LOMANCO: (2) 9½" DIA.CIRCLES
   - MILLENIUM METAL: 2½"x46" HOLE
9. ROOF UNDERLAYMENT TO BE USED IS 30 LBS.SYNTHETIC FELT.

THOMPSON ENGINEERING GROUP, INC.
4401 Vineland Road Suite A6 Orlando, FL 32811
Ph: (407) 734-1450
Fax: (407) 734-1790
www.tegfl.com

815 Orienta Ave. Suite# 1040
Altamonte Springs, FL. 32701
Ph: (407) 629-6711
Fax: (407) 629-6776
www.mjshomedesigns.com

designers group
residential·commercial·architecture

A division of Park Square Enterprises Inc.
5200 Vineland Rd. Suite #200
Orlando, Fl. 32811
Phone: (407) 529-3000

WRITTEN DIMENSIONS SHALL HAVE PRECEDENCE OVER SCALE DIMENSIONS.
Contractors shall verify and be responsible for all dimensions and conditions of the job and M.J.S., Inc. must be notified in writing of any changes in the dimensions, conditions and specifications appearing on these plans.

40-2922

LARGO (WS)
Lot # - Subdivision
Street Address
City, State, Zip

ISSUE DATE	08/27/2020
REVISIONS	
PROJECT:	00-0000
SCALE:	AS NOTED
DRAWN BY:	S.B.
DESIGNED BY:	MJS

HIGH ROOF FRAMING PLAN A (STANDARD)

S4.A

© COPYRIGHT 2016 PARK SQUARE HOMES HERBERT RESERVES ITS COMMON LAW COPYRIGHTS IN THESE PLANS, IDEAS AND DESIGN. THESE PLANS, IDEAS AND DESIGNS ARE NOT TO BE COPIED OR MODIFIED IN ANY MATTER OR FORM WHATSOEVER, NOR ARE THEY TO BE ASSIGNED TO ANY THIRD PARTY WITHOUT FIRST OBTAINING THE EXPRESS WRITTEN PERMISSION FROM PARK SQUARE HOMES.

CONNECTOR SCHEDULE

CONNECT. TYPE	SIMPSON DESCRIPTION	SIMPSON FASTENERS PER CONNECTOR	MAX. UPLIFT	LAT. LDS. F1 / F2
4	HETA16	9-10d x 1½"	1,810	65 / 960
5	DETAL20	18-10d x 1½"	2,480	2000/ 1370
20	H3	RFT: 4-8d / PLT: 4-8d	455	125 / 160
21	H1	RFT:6-8dx1½"/PLT:4-8d	475	485 / 165
22	H10S	RFT: 8-8d x 1½" PLT: 8-8d x 1½"	1010	660/550
23	LUS26	HDR: 4-10d/JST: 4-10d	935	N/A
24	H7	RFT / TRS: 4-8d PLT / STD: 10-8d	985	400 / N/A
26	H2.5	RFT:5-8d / PLT: 5-8d	415	150 / 150
34	A34	H:4-8dx1½"/P:4-8dx1½"	365	280 / 303
35	A35F	H:4-8dx1½"/P:4-8dx1½"	440	440 / N/A
37	HTS16	14-10d	1,310	N/A
38	MTS16	14-10d	1,000	N/A
39	MTS30	14-10d	1000	N/A
43	LSTA12	10-10d	905	N/A
45	ST18	14-16d	1,200	N/A
47	LSTA24	18-10d	1,295	N/A
71	MSTA36	26-10d	2,135	N/A
72	MSTC66	64-16d SINKERS	5,495	N/A
79	SP1	STD:6-10d / PLT:4-10d	535	560 / 260
80	SP2	STD:6-10d / PLT:6-10d	605	560 / 260
81	SPH4,6,8	12-10d x 1½"	885	N/A
90	ABU66	12-16d	2,240	N/A
89	CB66	(2) 7/8" BOLTS	2,300	985
92	ABU44	12-16d	2,200	N/A
93	AC6 (MAX)	28-16d	1,815	1,070
94	AC4 (MAX)	28-16d	1,815	1,070
95	HTS20	20-10d	1,450	N/A
96	HD8A	SILL: 7/8" BOLT STUD:(3) 7/8"X5½" BOLTS	7,910	N/A
97	MTSM16	BLOCK: 4-¼"X2¼" TC JOIST : 7-10d	860	N/A
98	HTT4	SILL: 7/8" BOLT STRAP: 18-16d	4,235	N/A
99	A35	H:4-8dx1½"/P:4-8dx1½"	440	440 / N/A
102	HTT5	7/8" BOLT/ 26-10d	4,275	N/A
103	VGTR/L	32-SDS¼"X3"/(2) 7/8" BLT	3,990	N/A
104	HDU8-SDS2.5	7/8" BLT/20-SDS ¼"x2½"	5,020	N/A
110	HCP2	12-10d x 1½"	520	260 / N/A
167	HHUS46	H:14-16d/J:6-16d	1,550	N/A
168	U46	H:8-10d/J:4-10d	710	N/A
181	HUS26	20-16d	1,550	N/A
184	HUC28-2	H:14-16d/J:4-10d	1,085	N/A
214	HUC212-3TF	HD:16-3/16"X1½" TAPCON BM: 6-16d	1,135	N/A
215	HGUS210-2	HDR:46-16d/JST:10-16d	2,720	N/A
216	HUS412	BLOCK: 10-¼"X1½" TC JOIST : 10-16d	3,240	N/A
217	HUS212-2	BLOCK: 10-¼"X1½" TC JOIST : 10-16d	2,630	N/A
219	MBHA412	H:1-ATR3/4X8 TOP&FACE JOIST: 18-10d	3,145	N/A
220	N/A	N/A	1,620	N/A
226	MBHA4.75/12	HDR : (2) 3/4" φ x 8" JOIST : 18-10d	2,160	N/A
231	MBHA3.56/16	HDR : (2) 3/4" φ x 8" JOIST : 18-10d	3,450	N/A
232	MBHA5.50/16	HDR : (2) 3/4" φ x 8" JOIST : 18-10d	3,450	N/A
240	H16	R:2-10dx1½"P:10-10dx1½"	1,470	480 / N/A
241	LGT2	30-16d-sinker	2000	1015 / 440
301	MGT	(1) 5/8"BLTS./GIR: 22-10d	3,965	N/A
302	HGT-2 or 3	LTL:3/4"BLTS./GIR: 8-10d	6485	N/A
303	HGT-4	LTL:3/4"BLTS./GIR: 16-10d	9,250	N/A
401	SUR/L414	FACE:18-16d/JST:8-16d	1,700	N/A
T	CONNECTORS TO BE SPECIFIED & PROVIDED BY TRUSS MANUFACTURERS			

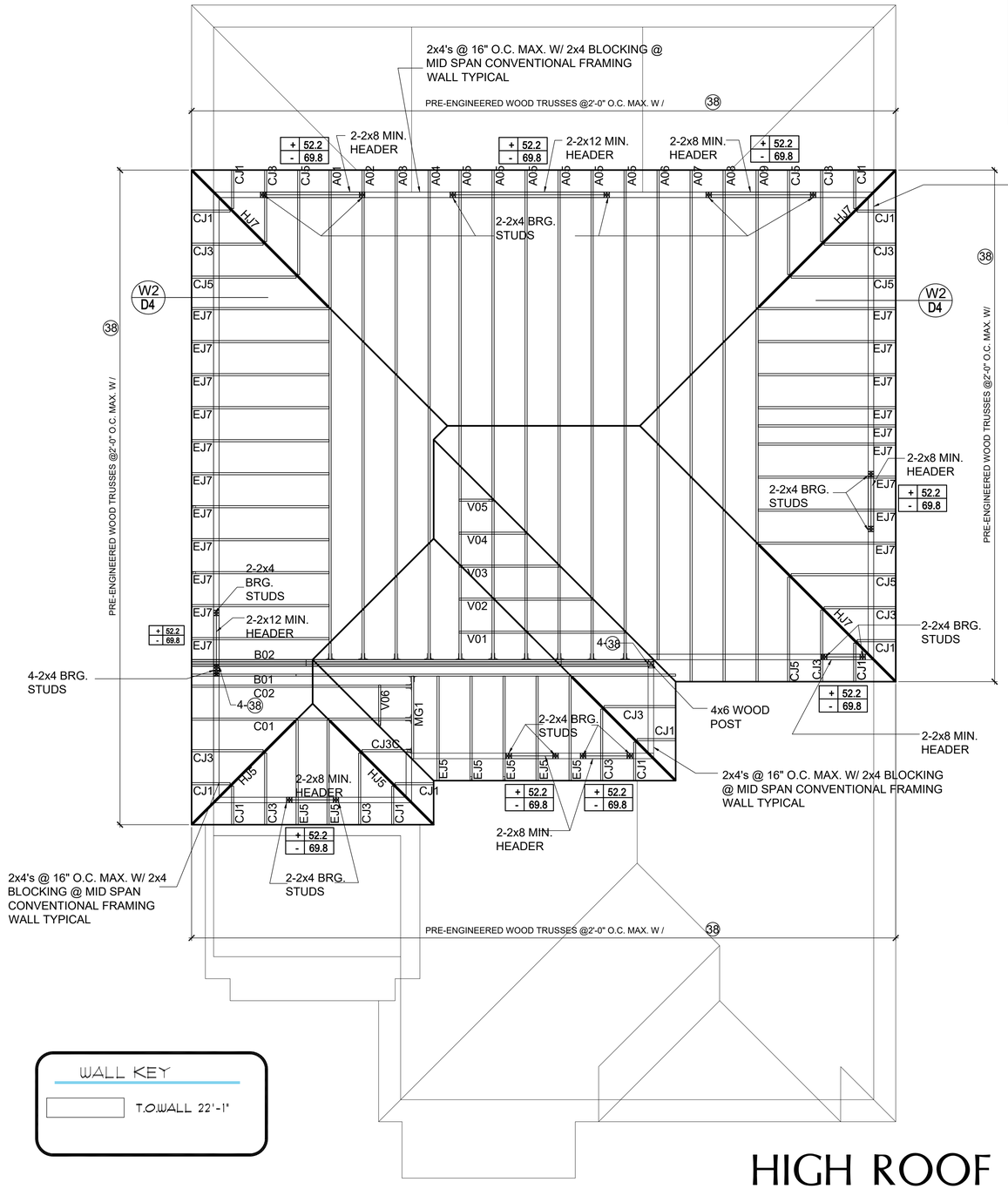

WALL KEY

T.O.WALL 22'-1"

HIGH ROOF FRAMING PLAN

B (STANDARD)

1/8"=1'-0" (11x17) 1/4"=1'-0" (22x34)

COMPONENT & CLADDING DESIGN WIND PRESSURES SECOND LEVEL

SEE PLAN DESIGN WIND PRESSURE

+ XXX ULTIMATE DESIGNED POSITIVE PRESSURE
- XXX ULTIMATE DESIGNED NEGATIVE PRESSURE

NOTE: DESIGN PRESSURES BASED ULTIMATE WIND SPEED TO OBTAIN NOMINAL "ASD" WIND PRESSURES MULTIPLY VALUES SHOWN BY A FACTOR OF 0.6

NOTES

1. TYPICAL ROOF GABLE OVERHANG TO BE 12" UNLESS OTHERWISE NOTED.
2. TYPICAL ROOF EAVES OVERHANG TO BE 12" UNLESS OTHERWISE NOTED.
3. PROVIDE AND INSTALL FLASHING AND ROOFING AS PER NATIONAL ROOFING AND SHEET METAL ASSOC.STANDARDS AND/ OR ACCEPATBLE INDUSTRY PRACTICE AND IN ACCORDANCE WITH 6TH EDITION (2017)FLORIDA RESIDENTIAL CODE.
4. ALL ROOF TRUSSES, GIRDERS, BEAMS, HEADERS, ETC. TO BE SIZE BY TRUSS MANUFACTURER OR FL.REG.ENG.
5. TRUSSES SHALL BE BRACED TO PREVENT ROTATION & PROVIDE LATERAL STABILITY KIN ACCORDANCE WITH THE REQUIREMENTS SPECIFIED IN THE CONSTRUCTION DOCUMENTS FOR BUILDING & ON THE INDIVIDUAL TRUSS DESIGN DRAWINGS IN THE ABSENCE OF SPECIFIC BRACING REQUIREMENTS, TRUSSES SHALL BE BRACED IN ACCORDANCE WITH TPI/WTCA BCSI 1.
6. REFER TO TRUSS MANUFACTURERS DRAWINGS FOR TRUSS PLACEMENT & TRUSS TO TRUSS CONNECTIONS.
7. SHINGLE ROOF : UNDERLAYMENT TO BE INSTALLED IAW FBCR 2017, 6TH EDITION R905.1.1.
   UNDERLAYMENT MATERIALS REQUIRED TO COMPLY WITH ASTM D226, D1970, D4869 AND D6757 SHALL BEAR A LABEL INDICATING COMPLIANCE TO THE STANDARD DESIGNATION AND, IF APPLICABL, TYPE CLASSIFICATION INDICATED IN TABLE R905.1.1 UNDERLAYMENT SHALL BE APPLIED AND ATTACHED IN ACCORDANCE WITH TABLE R905.1.1.
8. OFF RIDGE VENTS MAXIMUM OPENING SIZES:
   - LOMANCO: (2) 9½" DIA.CIRCLES
   - MILLENIUM METAL: 2½"x46" HOLE
9. ROOF UNDERLAYMENT TO BE USED IS 30 LBS.SYNTHETIC FELT.

THEG
THOMPSON ENGINEERING GROUP, INC.
4401 Vineland Road Suite A6 Orlando, FL 32811
Ph: (407) 734-1450
Fax: (407) 734-1790
www.tegfl.com

MJS designers group
residential•commercial•architecture
815 Orienta Ave. Suite# 1040
Altamonte Springs, FL. 32701
Ph: (407) 629-6711
Fax: (407) 629-6776
www.mjshomedesigns.com

WRITTEN DIMENSIONS SHALL HAVE PRECEDENCE OVER SCALE DIMENSIONS.
Contractors shall verify and be responsible for all dimensions and conditions of the job and MJS, Inc. must be notified in writing of any changes in the dimensions, conditions and specifications appearing on these plans.

40-2922
LARGO (WS)
Lot # - Subdivision
Street Address
City, State. Zip

Park Square HOMES
A division of Park Square Enterprises Inc.
5200 Vineland Rd. Suite #200
Orlando, Fl. 32811
Phone: (407) 529-3000

ISSUE DATE	08/27/2020
REVISIONS	
PROJECT:	00-0000
SCALE:	AS NOTED
DRAWN BY:	S.B.
DESIGNED BY:	MJS

HIGH ROOF FRAMING PLAN B (STANDARD)

S4.B

© COPYRIGHT 2016 PARK SQUARE HOMES. HEREBY RESERVES ITS COMMON LAW COPYRIGHTS IN THESE PLANS, IDEAS AND DESIGNS. THESE PLANS, IDEAS AND DESIGNS ARE NOT TO BE COPIED OR MODIFIED IN ANY MATTER, OR FORM WHATSOEVER, NOR ARE THEY TO BE ASSIGNED TO ANY THIRD PARTY WITHOUT FIRST OBTAINING THE EXPRESS WRITTEN PERMISSION FROM PARK SQUARE HOMES.

CONNECTOR SCHEDULE

CONNECT. TYPE	SIMPSON DESCRIPTION	SIMPSON FASTENERS PER CONNECTOR	MAX. UPLIFT	LAT. LDS. F1 / F2
4	HETA16	9-10d x 1½"	1,810	65 / 960
5	DETAL20	18-10d x 1½"	2,480	2000/ 1370
20	H3	RFT: 4-8d / PLT: 4-8d	455	125 / 160
21	H1	RFT:6-8dx1½"/PLT:4-8d	475	485 / 165
22	H10S	RFT: 8-8d x 1½"	1010	660/550
		PLT: 8-8d x 1½"		
23	LUS26	HDR: 4-10d/JST: 4-10d	935	N/A
24	H7	RFT / TRS: 4-8d	985	400 / N/A
		PLT / STD: 10-8d		
26	H2.5	RFT:5-8d / PLT: 5-8d	415	150 / 150
34	A34	H:4-8dx1½"/P:4-8dx1½"	365	280 / 303
35	A35F	H:4-8dx1½"/P:4-8dx1½"	440	440 / N/A
37	HTS16	14-10d	1,310	N/A
38	MTS16	14-10d	1,000	N/A
39	MTS30	14-10d	1000	N/A
43	LSTA12	10-10d	905	N/A
45	ST18	14-16d	1,200	N/A
47	LSTA24	18-10d	1,295	N/A
71	MSTA36	26-10d	2,135	N/A
72	MSTC66	64-16d SINKERS	5,495	N/A
79	SP1	STD:6-10d / PLT:4-10d	535	560 / 260
80	SP2	STD:6-10d / PLT:6-10d	605	560 / 260
81	SPH4,6,8	12-10d x 1½"	885	N/A
90	ABU66	12-16d	2,240	N/A
89	CB66	(2) 7/8" BOLTS	2,300	985
92	ABU44	12-16d	2,200	N/A
93	AC6 (MAX)	28-16d	1,815	1,070
94	AC4 (MAX)	28-16d	1,815	1,070
95	HTS20	20-10d	1,450	N/A
96	HD8A	SILL: 7/8" BOLT	7,910	N/A
		STUD:(3) 7/8"X5½" BOLTS		
97	MTSM16	BLOCK: 4-¼"X2¼" TC JOIST : 7-10d	860	N/A
98	HTT4	SILL: 7/8" BOLT	4,235	N/A
		STRAP: 18-16d		
99	A35	H:4-8dx1½"/P:4-8dx1½"	440	440 / N/A
102	HTT5	7/8" BOLT/ 26-10d	4,275	N/A
103	VGTR/L	32-SDS¼"X3"/(2) 7/8" BLT	3,990	N/A
104	HDU8-SDS2.5	7/8" BLT/20-SDS ¼"x2½"	5,020	N/A
110	HCP2	12-10d x 1½"	520	260 / N/A
167	HHUS46	H:14-16d/J:6-16d	1,550	N/A
168	U46	H:8-10d/J:4-10d	710	N/A
181	HUS26	20-16d	1,550	N/A
184	HUC28-2	H:14-16d/J:4-10d	1,085	N/A
214	HUC212-3TF	HD:16-3/16"X1½" TAPCON BM: 6-16d	1,135	N/A
215	HGUS210-2	HDR:46-16d/JST:10-16d	2,720	N/A
216	HUS412	BLOCK: 10-¼"X1½" TC JOIST : 10-16d	3,240	N/A
217	HUS212-2	BLOCK: 10-¼"X1½" TC JOIST : 10-16d	2,630	N/A
219	MBHA412	H:1-ATR3/4X8 TOP&FACE	3,145	N/A
		JOIST: 18-10d		
220	N/A	N/A	1,620	N/A
226	MBHA4.75/12	HDR : (2) 3/4" φ x 8" JOIST : 18-10d	2,160	N/A
231	MBHA3.56/16	HDR : (2) 3/4" φ x 8" JOIST : 18-10d	3,450	N/A
232	MBHA5.50/16	HDR : (2) 3/4" φ x 8" JOIST : 18-10d	3,450	N/A
240	H16	R:2-10dx1½"P:10-10dx1½"	1,470	480 / N/A
241	LGT2	30-16d-sinker	2000	1015 / 440
301	MGT	(1) 5/8"BLTS./GIR: 22-10d	3,965	N/A
302	HGT-2 or 3	LTL:3/4"BLTS./GIR: 8-10d	6485	N/A
303	HGT-4	LTL:3/4"BLTS./GIR: 16-10d	9,250	N/A
401	SUR/L414	FACE:18-16d/JST:8-16d	1,700	N/A
T	CONNECTORS TO BE SPECIFIED & PROVIDED BY TRUSS MANUFACTURERS			

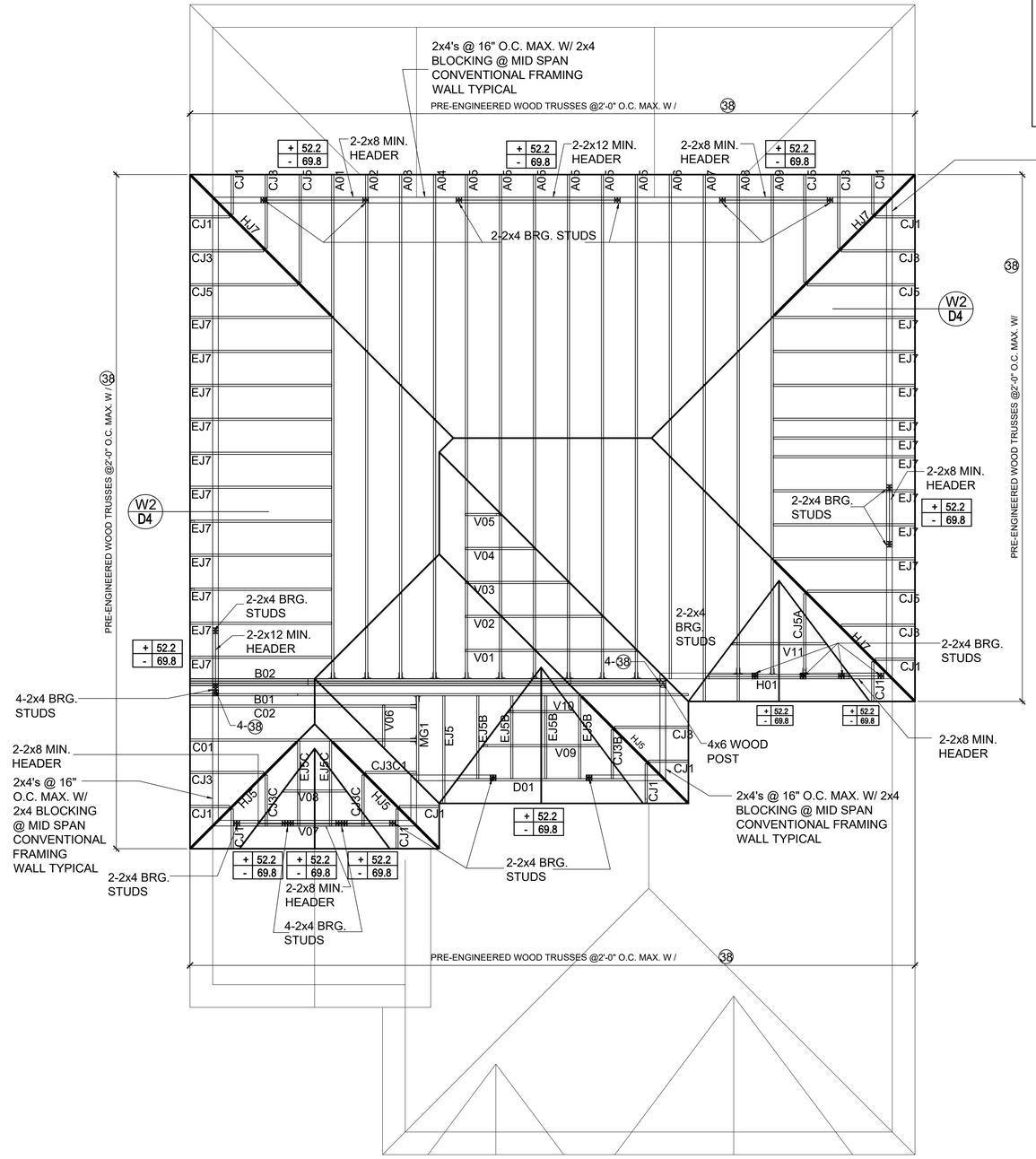

COMPONENT & CLADDING DESIGN WIND PRESSURES SECOND LEVEL

SEE PLAN DESIGN WIND PRESSURE

+ XXX ULTIMATE DESIGNED POSITIVE PRESSURE
- XXX ULTIMATE DESIGNED NEGATIVE PRESSURE

NOTE: DESIGN PRESSURES BASED ULTIMATE WIND SPEED TO OBTAIN NOMINAL "ASD" WIND PRESSURES MULTIPLY VALUES SHOWN BY A FACTOR OF 0.6

NOTES

1. TYPICAL ROOF GABLE OVERHANG TO BE 12" UNLESS OTHERWISE NOTED.
2. TYPICAL ROOF EAVES OVERHANG TO BE 12" UNLESS OTHERWISE NOTED.
3. PROVIDE AND INSTALL FLASHING AND ROOFING AS PER NATIONAL ROOFING AND SHEET METAL ASSOC.STANDARDS AND/ OR ACCEPATBLE INDUSTRY PRACTICE AND IN ACCORDANCE WITH 6TH EDITION (2017)FLORIDA RESIDENTIAL CODE.
4. ALL ROOF TRUSSES, GIRDERS, BEAMS, HEADERS, ETC. TO BE SIZE BY TRUSS MANUFACTURER OR FL.REG.ENG.
5. TRUSSES SHALL BE BRACED TO PREVENT ROTATION & PROVIDE LATERAL STABILITY KIN ACCORDANCE WITH THE REQUIREMENTS SPECIFIED IN THE CONSTRUCTION DOCUMENTS FOR BUILDING & ON THE INDIVIDUAL TRUSS DESIGN DRAWINGS IN THE ABSENCE OF SPECIFIC BRACING REQUIREMENTS, TRUSSES SHALL BE BRACED IN ACCORDANCE WITH TPI/WTCA BCSI 1.
6. REFER TO TRUSS MANUFACTURERS DRAWINGS FOR TRUSS PLACEMENT & TRUSS TO TRUSS CONNECTIONS.
7. SHINGLE ROOF : UNDERLAYMENT TO BE INSTALLED IAW FBCR 2017, 6TH EDITION R905.1.1.
   UNDERLAYMENT MATERIALS REQUIRED TO COMPLY WITH ASTM D226, D1970, D4869 AND D6757 SHALL BEAR A LABEL INDICATING COMPLIANCE TO THE STANDARD DESIGNATION AND, IF APPLICABL, TYPE CLASSIFICATION INDICATED IN TABLE R905.1.1 UNDERLAYMENT SHALL BE APPLIED AND ATTACHED IN ACCORDANCE WITH TABLE R905.1.1.
8. OFF RIDGE VENTS MAXIMUM OPENING SIZES:
   - LOMANCO: (2) 9½" DIA.CIRCLES
   - MILLENIUM METAL: 2½"x46" HOLE
9. ROOF UNDERLAYMENT TO BE USED IS 30 LBS.SYNTHETIC FELT.

HIGH ROOF FRAMING PLAN

C (STANDARD)

1/8"=1'-0" (11x17) 1/4"=1'-0" (22x34)

THOMPSON ENGINEERING GROUP, INC.
4401 Vineland Road Suite A6 Orlando, FL 32811
Ph: (407) 734-1450
Fax: (407) 734-1790
www.tegfl.com

MJS designers group
residential•commercial•architecture
815 Orienta Ave. Suite# 1040
Altamonte Springs, FL. 32701
Ph: (407) 629-6711
Fax: (407) 629-6776
www.mjshomedesigns.com

WRITTEN DIMENSIONS SHALL HAVE PRECEDENCE OVER SCALE DIMENSIONS.
Contractors shall verify and be responsible for all dimensions and conditions of the job and MJS, Inc. must be notified in writing of any changes in the dimensions, conditions and specifications appearing on these plans.

40-2922
LARGO (WS)
Lot # - Subdivision
Street Address
City, State. Zip

A division of Park Square Enterprises Inc.
5200 Vineland Rd. Suite #200
Orlando, FL 32811
Phone: (407) 529-3000

Park Square HOMES

ISSUE DATE	08/27/2020
REVISIONS	
PROJECT:	00-0000
SCALE:	AS NOTED
DRAWN BY:	S.B.
DESIGNED BY:	MJS

HIGH ROOF FRAMING PLAN C (STANDARD)

S4.C

© COPYRIGHT 2016 PARK SQUARE HOMES EXPERT RESERVES ITS COMMON LAW COPYRIGHTS IN THESE PLANS, IDEAS AND DESIGN. THESE PLANS, IDEAS AND DESIGN ARE NOT TO BE COPIED OR MODIFIED IN ANY MATTER OR FORM WHATSOEVER, NOR ARE THEY TO BE ASSIGNED TO ANY THIRD PARTY WITHOUT FIRST OBTAINING THE EXPRESS WRITTEN PERMISSION FROM PARK SQUARE HOMES.

STRUCTURAL NOTES

1. THIS STRUCTURE HAS BEEN DESIGNED IN ACCORDANCE WITH THE 6TH EDITION, FBCR 2017 (WIND LOAD @ 150 MPH.)
2. WINDOWS, DOORS, AND GARAGE DOORS TO BE DESIGNED TO MEET FBCR SECTION R301
3. ALL FLOOR SLABS TO BE OF 2,500 PSI CONC. PLANT MIX MIN. 5" THICK WITH 6x6 10/10 WIRE MESH 6 MIL. POLY. VAPOR-BARRIER OVER TERMITE TREATED COMPACTED CLEAN FILL.
4. CONCRETE MASONRY UNITS SHALL MEET: CH. 1-3 OF ACI 530-02/ ASCE 5-02/TMS 402-02 OR BIA BUILDING CODE REQUIREMENTS.
5. MORTAR TO BE TYPE "M" OR "S", GROUT - 2,500 PSI @ 28 DAYS.
6. MASONRY CLEAN OUTS REQUIRED @ GROUT GREATER THAN FIVE (5) FEET IN HEIGHT AND ALL VERTICALS.
7. REBAR TO BE # 5'S GRADE 60, W/ MIN. LAP OF 25". USE "L" BARS @ CORNERS AND USE STANDARD HOOKS @ CHANGE IN DIRECTION WITH MIN. LAP 12"
8. GYP. BD. CEILING SHALL BE INSTALLED PERP. TO FRAMING & NAILED @ 7" O.C. WITH 5d NAILS. GYP. BD. WALLS SHALL BE NAILED @8" O.C. WITH 5d NAILS
9. UPLIFT CONNECTOR'S TO PROVIDE CONTINUITY FROM ROOF TRUSSES THRU PLATES TO SLAB AND FOUNDATION PER ENCLOSED DETAILS.
10. EPOXY ANCHOR ALTERNATIVE:
    THREADED ANCHOR ROD MAY BE USED IN LIEU OF ANCHOR BOLTS FOR USE AS PLATE ANCHORS OR HURRICANE ANCHORS.
    THE FOLLOWING CRITERIA MUST BE MET:

ANCHOR SIZE	CONC. HOLE SIZE	MIN. HOLE DEPTH
½"	-3/4"	7"
-5/8"	-7/8"	7"
-3/4"	1"	8"
-7/8"	1-1/8"	9"

    AFTER HOLE IS DRILLED, ALL CONCRETE DUST MUST BE REMOVED PRIOR TO EPOXY INSTALLATION. THREADED ROD TO BE MIN. A36 STEEL AND FREE OF DIRT OR GREASE. LOAD ON ROD CANNOT BE APPLIED UNTIL 12 HOURS AFTER INSTALLATION. 2 COMPONENT EPOXY RESIN MATERIAL TO BE MIXED PER MFG. DIRECTIONS.
11. SOIL BEARING CAPACITY 2000 PSF MINIMUM

WOOD STRUCTURAL NOTES

1. ALL WOOD TO BE SPECIES, GROUP, AND GRADE AS NOTED BELOW. DAMAGED WOOD NOT TO BE USED.
2. ALL STRUCTURAL LUMBER SHALL BE SPF (SPRUCE-PINE-FIR) #2 OR BETTER UNLESS OTHERWISE NOTED. (PRE ENG. TRUSSES EXCLUDED)
3. END JOINT IN STRUCTURAL DOUBLE TOP PLATE TO BE OFFSET AT LEAST 4". STRUCTURAL DOUBLE PLATES TO BE NAILED @ 6" O.K..
4. PLYWOOD OR OSB. WALL SHEATHING NAIL PATTERN TO BE 10d @ 6" O.C.. UNLESS OTHERWISE NOTED.
5. NUMBER OF HEADER STUDS AND ADJACENT FULL LENGTH STUDS PER WALL AND HEADER STUD REQUIREMENT SCHEDULE.
6. MAX. 1" HOLE DRILLED INTO EXTERIOR STRUCTURAL STUDS.
7. DBL. STUDS @ EA. END OF SHEAR WALL.
8. WHEN ANCHORING MULTIPLE WD. ITEMS TOGETHER, THE LENGTH OF HURRICANE STRAP MUST BE CENTERED.
9. NAIL PATTERN
   -DOUBLE PLATE 12" O.C.. OUTSIDE SPLICE ZONE (SEE NOTE 4)
   -DOUBLE STUDS @ 12" O.C..
   -DOUBLE OR TRIPLE HEADER @ 6" O.C.. @ EDGE @ 12" O.C.. INTERMEDIATE.
   -HEADER TO STUD @ 4" O.C.. EA. HEADER MEMBER.
   -STUD TO TOP OR BOTTOM PLATE : (2) 16d THRU PLT. OR (2) 16d EA. SIDE TOE NAILED TO PLT.
10. -ROOF SHEATHING FOR SHINGLE ROOF TO BE MIN. 7/16" OSB, NAILED TO ROOF TRUSSES SPACED @ 24" O.C. (MAX) WITHOUT BLOCKING.
    -ROOF SHEATHING FOR TILE ROOF TO BE MIN. 19/32" OSB, 1/2" CDX PLYWOOD OR 1/2" ADVANTECH. NAILED TO ROOF TO ROOF TRUSS SPACED @ 24" O.C. (MAX) WITHOUT BLOCKING.
11. FLOOR SHEATHING TO BE MIN. 23/32" PLYWOOD NAILED @ 6" O.C. W/ #8 RING SHANK NAILS AND LIQUID NAIL ADHESIVE.
12. ALL FLOOR TRUSSES TO BE END BLOCKED @ BEARING LOCATIONS
13. TRUSS BRACING PER TRUSS MANUFACTURE'S DRAWINGS.
14. ALL NAILING SPECIFIED TO BE APPLIED BY NAIL GUN OR MANUALLY
15. ALL WOOD IN DIRECT CONTACT WITH MASONRY SHALL BE PRESSURE TREATED.
16. 2000 PSF MINIMUM SOIL BEARING CAPACITY

FIELD REPAIR NOTES

1. MISSED LINTEL STRAPS FOR MASONRY CONSTRUCTION MAY BE SUBSTITUTED W/ (1) USP MTW16 OR HC10 OR SIMPSON MTSM16 W/ (4) -1/4" X 2-1/4" TAPCONS TO BOND BEAM AND (7) 10d NAILS TO TRUSS FOR UPLIFTS LESS THAN 860 LBS (USE (2) MTSM16 FOR UPLIFTS LESS THAN 1720#). NO MORE THAN 10 STRAPS MAY BE SUBSTITUTED OR NO MORE THAN 3 IN A ROW. IF GIRGER TRUSS CONNECTIONS ARE MISSED CONTACT ENGINEER FOR SUBTITUTION
2. MISSED J-BOLTS FOR FRAMED EXTERIOR/ BEARING WALLS MAY BE SUBSTITUTED W/ 1/2" DIA. x 7" LONG WEDGE ANCHORS (REDHEADS).
3. MISSED FOOTING DOWELS MAY BE SUBSTITUTED W/ A STRAIGHT #5 REBAR SET IN A 3/4" DIA. x 6" DEEP HOLE FILLED W/ UNITEX PROPOXY 300 OR SIMPSON SET OR ETF ADHESIVES.
4. BLOCK WALL OVERHANGING SLAB CONDITION:
   UP TO -7/8" - NO REPAIR NECESSARY
   -7/8" TO 1-1/4" - ADD FILLED CELL (NO VERTICAL STEEL) MIDPOINT OF WALL BETWEEN EXISTING FILLED CELLS (WITH STEEL) IN AREAS AFFECTED
   1-1/4"+ - REQUIRE SPECIAL ENGINEERING LETTER
5. PENETRATION OF PLUMBING PIPES/DRYER VENTS THRU PLATES OF A LOAD BEARING WALL MAY OCCUR PROVIDED DBL. STUDS ARE ADDED ON EITHER SIDE OF PENETRATION WITHIN 3" AND TRUSS/ FLOOR TRUSS IS NO CLOSER THAN 3" FROM PENETRATION. ADD (1) MTS12 @ TOP AND BOTTOM PLATE

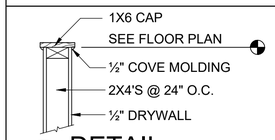

3 / D1 DETAIL
1/2"= 1'-0"

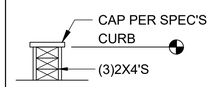

4 / D1 DETAIL
1/2"= 1'-0"

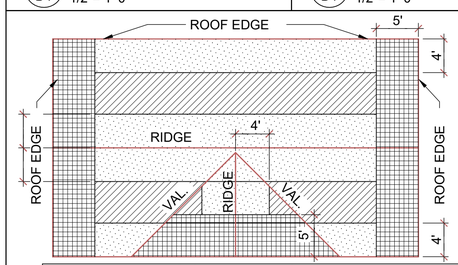

ROOF NAILING PATTERN

ZONE:	8d NAILS @ 6" O.C. EDGES AND 12" O.C. FIELD
ZONE:	8d NAILS @ 6" O.C. EDGES AND 12" O.C. FIELD
ZONE:	8d NAILS @ 4" O.C. EDGES AND 6" O.C. FIELD

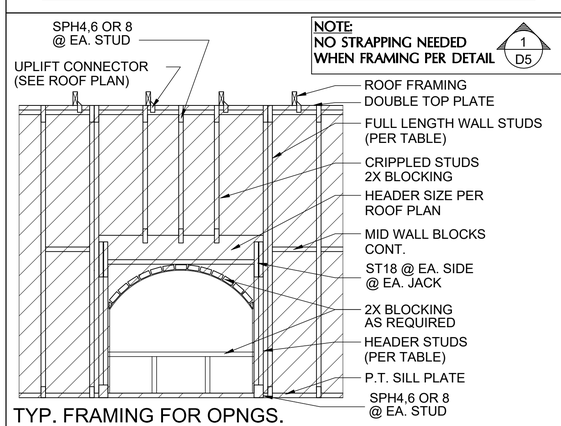

NOTE:
NO STRAPPING NEEDED WHEN FRAMING PER DETAIL 1 / D5

TYP. FRAMING FOR OPNGS.

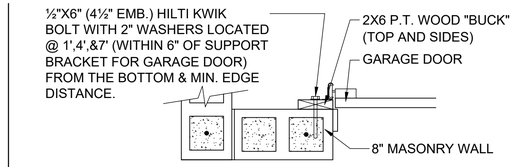

- DETAIL TO SATISFY 150 MPH WIND LOAD
- MASONRY FRAME SHALL BE MIN 8X16 ASTM C-9D
- GROUT FILLED CELL W/½" ASTM 2 #5 REBAR (GRADE 60) @ EA. SIDE OF GARAGE DOOR OPENING
- MAX. DISTANCE TO CORNER OF C.B.S. WALL REINF. 48"
- REINF. TO BE CONT. FROM FTG. TO TIE BEAM W/ ALL "ACI" DETAILS & DEVELOPMENT LENGTHS ADHERED TO
- GARAGE DOOR MANUF. TO PROVIDE ATTACHMENT TO "BUCK"

1.) THE GARAGE DOOR ASSEMBLY SHALL BE DESIGNED FOR POSITIVE AND NEGATIVE WIND PRESSURES OF 25 PSF IN ACCORDANCE WITH SECTION R301 OF THE FLORIDA RESIDENTIAL CODE CERTIFICATION SHALL BE SUBMITTED FROM THE GARAGE DOOR MANUFACTURER TO THE BUILDING DEPARTMENT FOR THE FOLLOWING ITEMS:
   A.) THE DESIGN OF THE DOOR CAN WITHSTAND POSITIVE AND NEGATIVE WIND PRESSURES OF 25 PSF.
   B.) THE DESIGN OF THE DOOR COMPLIES WITH THE CRITERIA SPECIFIED IN SECTION R609 OF THE 2017 FLORIDA BUILDING CODE RESIDENTIAL, 6TH EDITION
   C.) DOOR SIZE, TYPE AND GLAZING
   D.) TRACK SIZE AND FASTENER DETAILS.
   E.) TRACK BRACKET QUANTITY, SPACING AND FASTENER DETAILS.
   F.) REINFORCING MEMBER QUANTITY, LOCATION, SIZE, TYPE AND FASTENER DETAILS. (IF REQUIRED)

GARAGE BUCK DETAIL
1"= 1'-0"

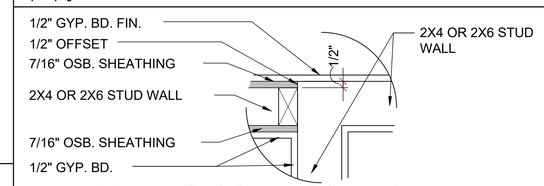

7A / D1 DETAIL @ CONN. TO REG. WALL
1"= 1'-0"

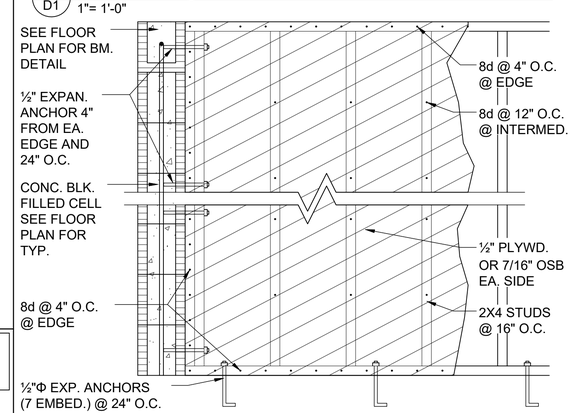

7 / D1 SHEAR WALL DETAIL
1/2"= 1'-0"
USE ONLY WHEN NOTED AS SHEAR WALL ON PLANS

MIN. WALL AND HEADER REQUIREMENTS

		MAXIMUM HEADER SPAN (ft.)					
		3'	6'	9'	12'	15'	18'
UNSUPPORTED WALL HEIGHT	STUD SPACING	NUMBER OF HEADER STUDS SUPPORTING END OF HEADER					
		1	1	2	2	2	2
		NUMBER OF FULL-LENGTH STUDS @ EACH END OF HEADER					
10' OR LESS		2	2	3	3	3	3
GREATER THAN 10'		2	2	3	4	5	5

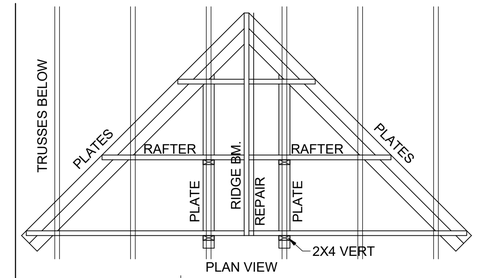

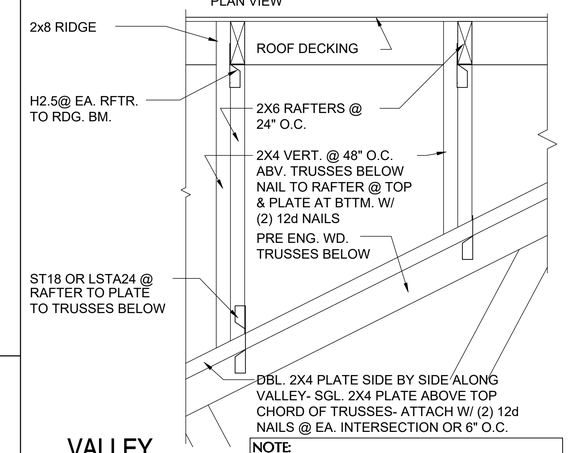

8 / D1 VALLEY DETAIL
-3/4" = 1'-0"

NOTE:
IF RIDGE BEAM IS UNDERSIZED-CUT 1 1/2" FROM END OF RAFTERS ON ONE SIDE AND ADD 2X8 NEXT TO FIRST ONE W/12d'S @ 6" O.C.

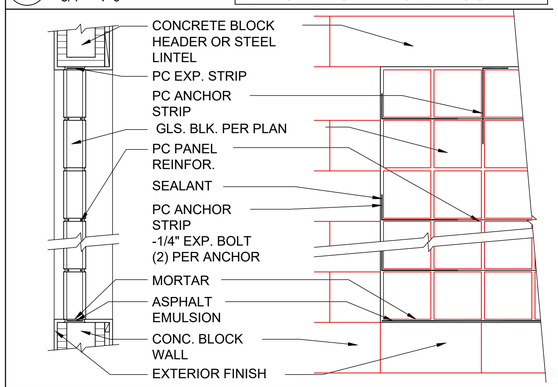

PANEL ANCHOR CONSTRUCTION

PC PANEL REINFORCING (TOP):
USED IN PANELS OVER 25"S.F. IN AREA,IS EMBEDDED HORIZONTALLY IN THE MORTAR JOINTS BETWEEN EVERY OTHER COURSE. PANEL REINFORCING IS FORMED OF TWO PARALLEL WIRES, EITHER 1-5/8" O.C. (FOR USE WITH "THINLINE" SERIES GLS. BLK.) OR 2" O.C. (FOR USE W/ "PREMIERE" SERIES GLS. BLK.), W/ BUTT WELDED CROSSWIRES AT REGULAR INTERVALS. 4' AND 10' LENGTHS AVAILABLE.

PC PANEL ANCHORS (MIDDLE):
ARE USED TO TIE PITTSBURGH CORNING GLASS BLOCK PANELS INTO THE SURROUNDING FRAMEWORK WHEN CHANNELS ARE NOT USED. FORMED FROM 20 GAUGE PERFORATED- THEN GALVANIZED STEEL STRIPS, PANEL ANCHORS ARE AVAIL. IN 1-3/4" WIDTHS X 24" LENGTHS.

PC EXPANSION STRIPS (BOTTOM):
MADE OF WHITE POLYETHYLENE, ARE INSERTED AT THE HEAD AND THE STRIPS REPLACE MORTAR AT THESE POINTS TO CUSHION THE GLASS BLOCK AND ALLOW THE PANEL TO EXPAND & CONTRACT FREELY. FOR METAL CHANNEL OR MASONRY CHASE CONSTRUCTION, PC EXPANSION STRIPS ARE AVAILABLE 3/8" THICK X 4" WIDE X 24" LONG. FOR PANEL ANCHOR CONSTRUCTION, STD. 4" WIDE STRIPS ARE EASILY CUT TO 3" WIDTH, FOR 3-7/8" "PREMIERE" SERIES BLK., AND TO 2-1/4" WIDTH, FOR 3-1/8" "THINLINE" SERIES BLOCK.

6 / D1 GLASS BLOCK DETAIL

THOMPSON ENGINEERING GROUP, INC.
4401 Vineland Road Suite A6 Orlando, FL 32811
Ph: (407) 734-1450
Fax: (407) 734-1790
www.tegfl.com

815 Orienta Ave. Suite# 1040
Altamonte Springs, FL. 32701
Ph: (407) 629-6711
Fax: (407) 629-6776
www.mjshomedesigns.com

MJS designers group
residential•commercial•architecture

A division of Park Square Enterprises Inc.
5200 Vineland Rd. Suite #200
Orlando, Fl. 32811
Phone: (407) 529-3000

WRITTEN DIMENSIONS SHALL HAVE PRECEDENCE OVER SCALE DIMENSIONS.
Contractors shall verify and be responsible for all dimensions and conditions of the job and MJS, Inc. must be notified in writing of any changes in the dimensions, conditions and specifications appearing on these plans.

40-2922
LARGO (WS)
Lot # - Subdivision
Street Address
City, State. Zip

ISSUE DATE	08/27/2020
REVISIONS	
PROJECT:	00-0000
SCALE:	AS NOTED
DRAWN BY:	S.B.
DESIGNED BY:	MJS

STRUCTURAL NOTES & DETAILS
SD.1

© COPYRIGHT 2016 PARK SQUARE HOMES RESERVES ITS COMMON LAW COPYRIGHTS IN THESE PLANS, IDEAS AND DESIGN. THESE PLANS, IDEAS AND DESIGNS ARE NOT TO BE COPIED OR MODIFIED IN ANY MATTER OR FORM WHATSOEVER, NOR ARE THEY TO BE ASSIGNED TO ANY THIRD PARTY WITHOUT FIRST OBTAINING THE EXPRESS WRITTEN PERMISSION FROM PARK SQUARE HOMES.

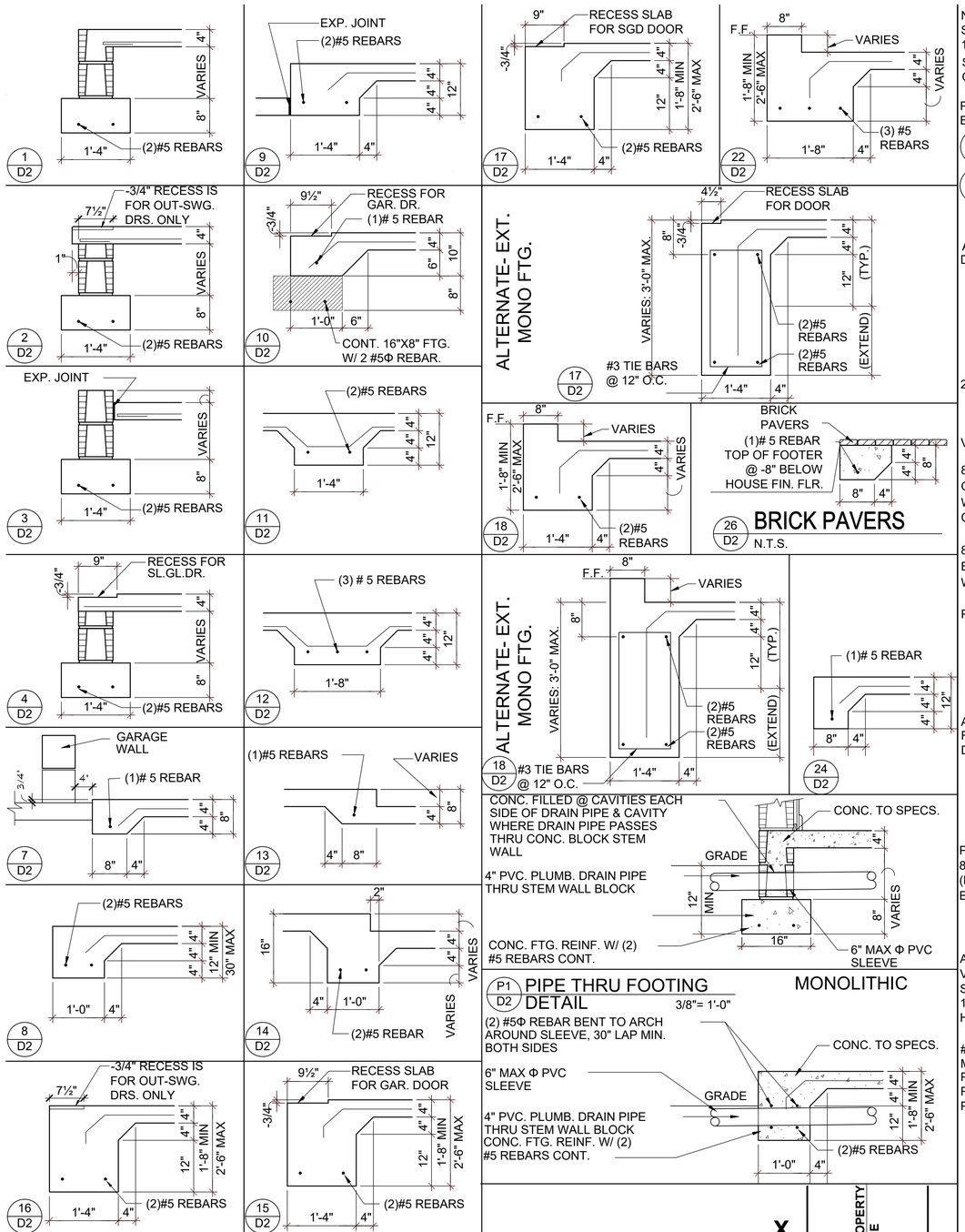

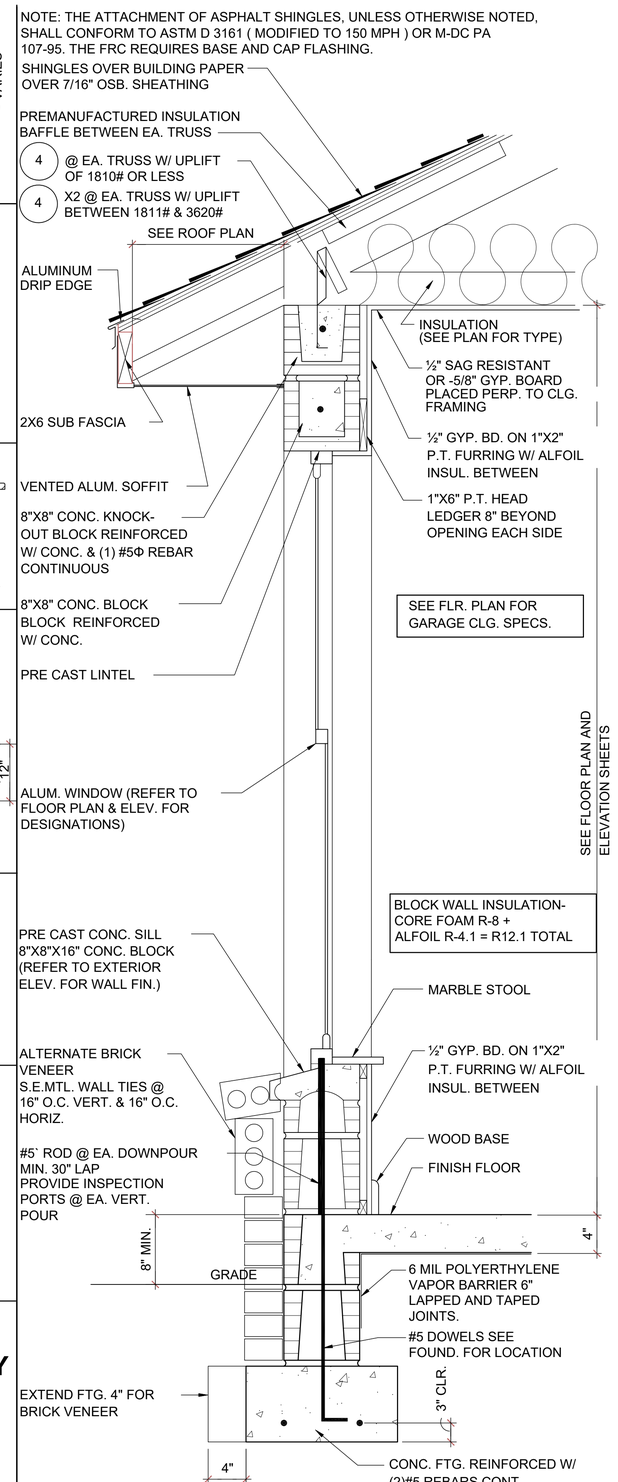

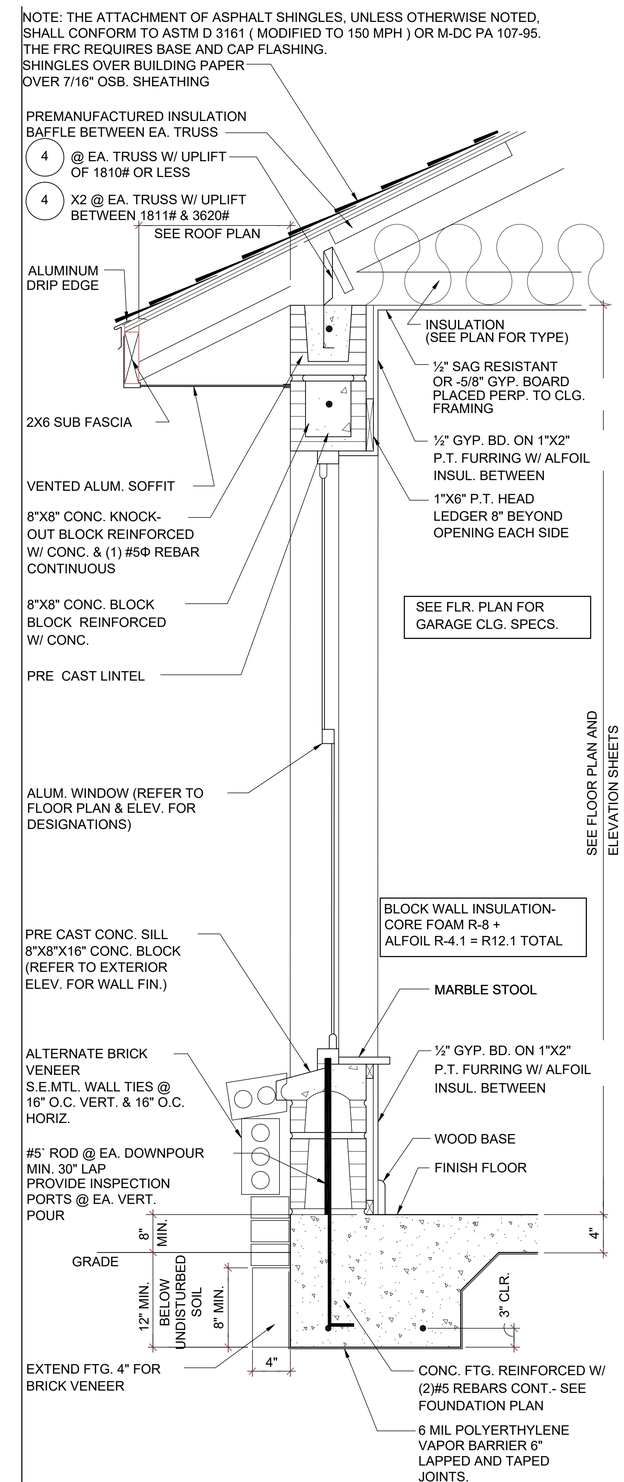

THOMPSON ENGINEERING GROUP, INC.
4401 Vineland Road Suite A6 Orlando, FL 32811
Ph: (407) 734-1450
Fax: (407) 734-1790
www.tegfl.com

MJS designers group
residential•commercial•architecture
815 Orienta Ave. Suite# 1040
Altamonte Springs, FL. 32701
Ph: (407) 629-6711
Fax: (407) 629-6776
www.mjshomedesigns.com

WRITTEN DIMENSIONS SHALL HAVE PRECEDENCE OVER SCALE DIMENSIONS.
Contractors shall verify all plans, dimensions and conditions of the job and MJS, Inc. must be notified in writing of any changes in the dimensions, conditions and specifications appearing on these plans.

40-2922
LARGO (WS)
Lot # - Subdivision
Street Address
City, State. Zip

A division of Park Square Enterprises Inc.
5200 Vineland Rd. Suite #200
Orlando, Fl. 32811
Phone: (407) 529-3000
Park Square HOMES

ISSUE DATE	08/27/2020
REVISIONS	
PROJECT:	00-0000
SCALE:	AS NOTED
DRAWN BY:	S.B.
DESIGNED BY:	MJS

STRUCTURAL DETAILS
SD.2

© COPYRIGHT 2016 PARK SQUARE HOMES HEREBY RESERVES ITS COMMON LAW COPYRIGHTS IN THESE PLANS, IDEAS AND DESIGN. THESE PLANS, IDEAS AND DESIGNS ARE NOT TO BE COPIED OR MODIFIED IN ANY MATTER OR FORM WHATSOEVER, NOR ARE THEY TO BE ASSIGNED TO ANY THIRD PARTY WITHOUT FIRST OBTAINING THE EXPRESS WRITTEN PERMISSION FROM PARK SQUARE HOMES.

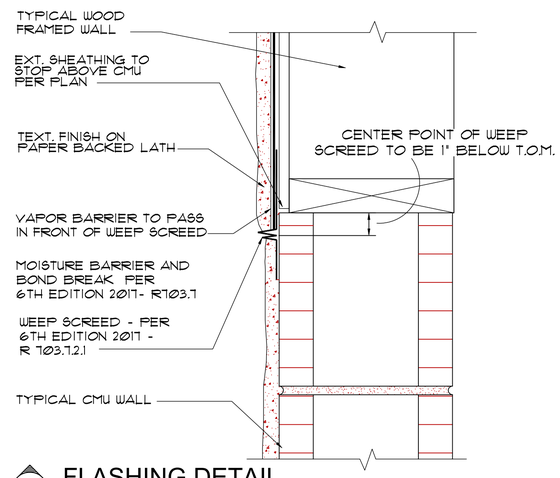

A / D3 FLASHING DETAIL

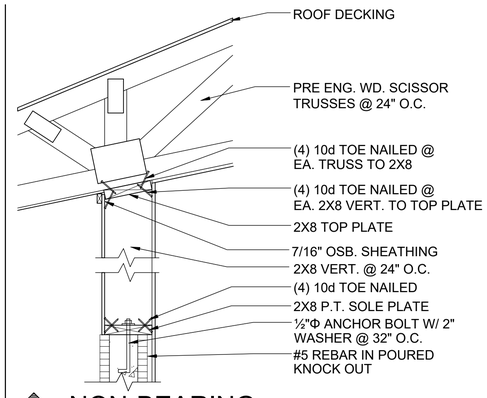

G-6 / D3 NON-BEARING

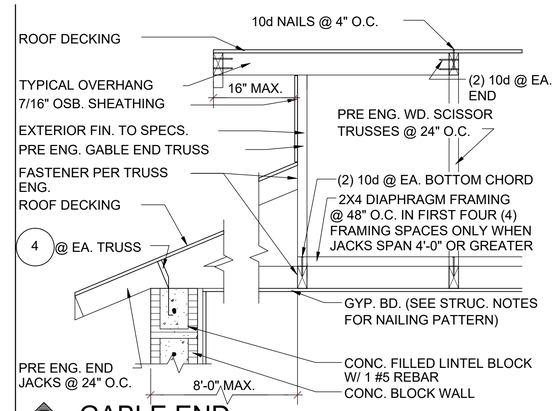

G-3 / D3 GABLE END

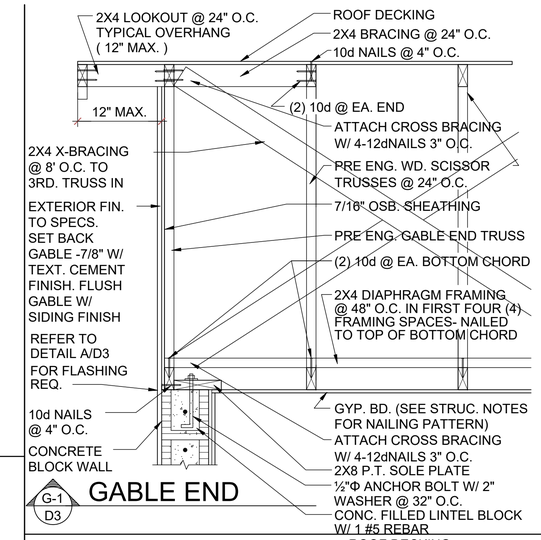

G-1 / D3 GABLE END

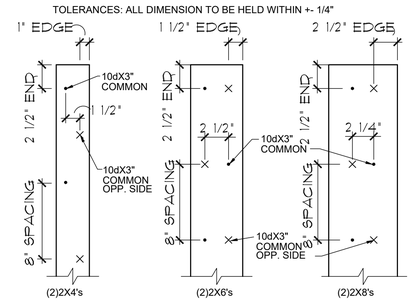

B 2X BUILT-UP STUD COLUMN DETAILS

1?" = 1'-0"

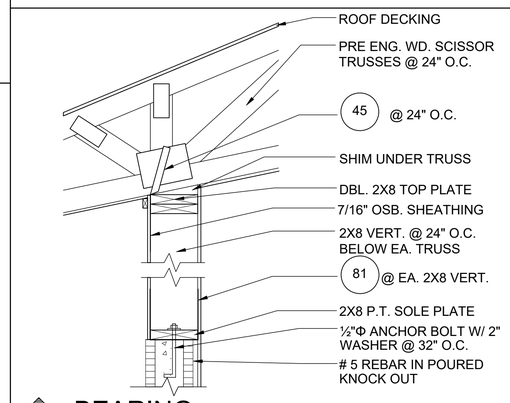

G-7 / D3 BEARING

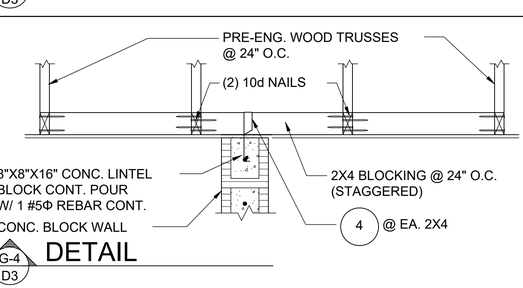

G-4 / D3 DETAIL

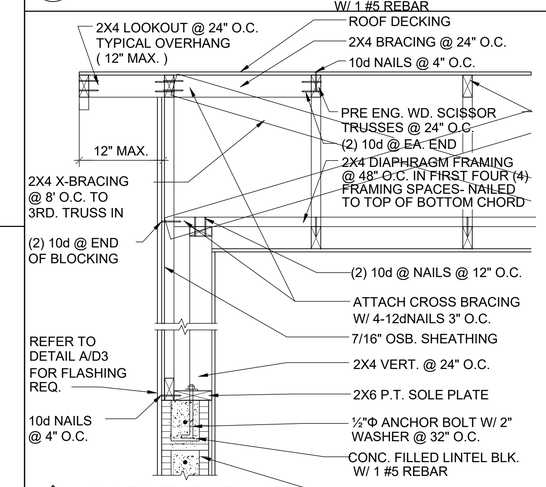

G-2F / D3 GABLE END

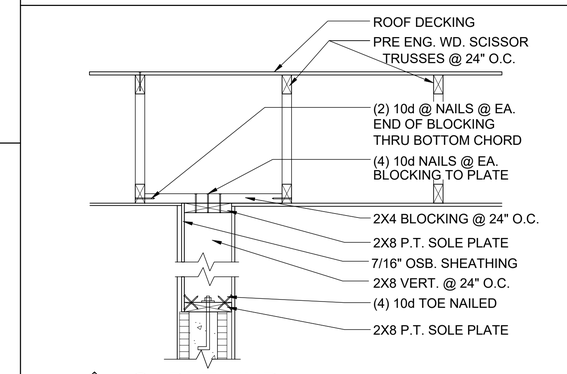

G-5 / D3 GABLE END

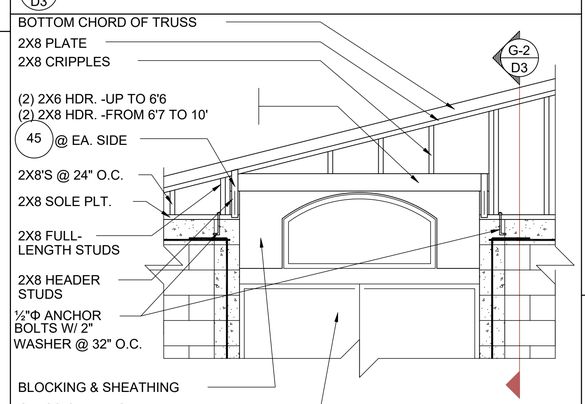

B / D3 GABLE END

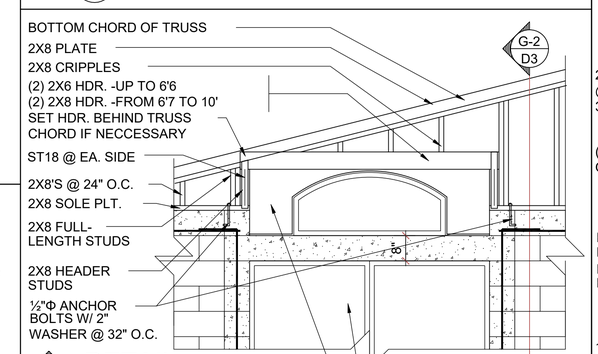

CB / D3 DETAIL

N.T.S.

G-2 / D3 GABLE END

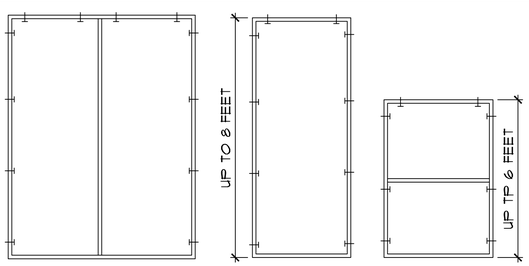

DOUBLE DOOR SINGLE DOOR WINDOW

FOR MULTIPLE WINDOWS AND DOORS USE 2 TAPCONS PER WINDOW AT THE HEAD AND 4 TAPCONS AT THE JAMB.

BUCK ATTACHMENT DATA

BUCKS SHALL BE 1x4 OR 2x8 PT AT WINDOWS OR 2x8 PT AT DOORS IN PINE OR SPRUCE. AT WINDOWS ATTACH BUCKS TO BLOCK WITH COMMON T-NAILS AND PLACEMENT SIMILAR TO TAPCONS SHOWN. AT DOORS OR FIN WINDOWS IN BLOCK, ATTACH BUCKS w/ 2 T-NAILS TOP AND BOTTOM AND 8" O.C. STAGGERED IN THE FIELD.

USE MIN. 2-1/4" T-NAILS w/ 1x BUCK. USE MIN. -1/4" x 3" TAPCONS w/ 2x BUCK. START ALL END TAPCONS WITHIN 6" OF CORNERS AND 30" ON CENTER MAXIMUM.

NOTE

IN CASE OF BLOCK OPENINGS LARGER THAN DOOR FRAMING: ATTACH ADDITIONAL 2X FRAMING TO THE BLOCK WALL USING 1/4" x 4" TAPCONS AT 3" FROM END AND 12" O.C. IN THE CENTER. ATTACH TOP FRAMING TO HEADER USING 1/4"x1-3/4" TAPCONS W/ (1) 6" FROM END TO END AND 12" O.C. IN THE. CENTER.

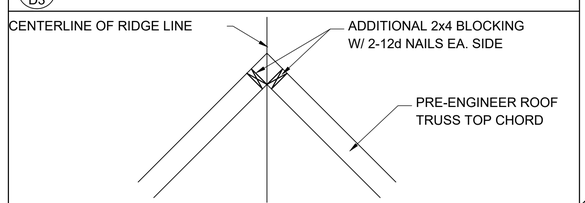

2 / D3 RIDGE DETAIL

N.T.S.

THOMPSON ENGINEERING GROUP, INC.
4401 Vineland Road Suite A6 Orlando, FL 32811
Ph: (407) 734-1450
Fax: (407) 734-1790
www.tegfl.com

MJS designers group
residential•commercial•architecture
815 Orienta Ave. Suite# 1040
Altamonte Springs, FL. 32701
Ph: (407) 629-6711
Fax: (407) 629-6776
www.mjshomedesigns.com

WRITTEN DIMENSIONS SHALL HAVE PRECEDENCE OVER SCALE DIMENSIONS.
Contractors shall verify and be responsible for all dimensions and conditions of the job and MJS, Inc. must be notified in writing of any changes in the dimensions, conditions and specifications appearing on these plans.

40-2922

LARGO (WS)
Lot # - Subdivision
Street Address
City, State. Zip

A division of Park Square Enterprises Inc.
5200 Vineland Rd. Suite #200
Orlando, Fl. 32811
Phone: (407) 529-3000
Park Square HOMES

ISSUE DATE	08/27/2020
REVISIONS	
PROJECT:	00-0000
SCALE:	AS NOTED
DRAWN BY:	S.B.
DESIGNED BY:	MJS

STRUCTURAL DETAILS

SD.3

© COPYRIGHT 2016 PARK SQUARE HOMES EXPRESS RESERVED. ITS COMMON LAW COPYRIGHTS IN THESE PLANS, IDEAS AND DESIGN. THESE PLANS, IDEAS, AND DESIGNS ARE NOT TO BE COPIED OR MODIFIED IN ANY MATTER OR FORM WHATSOEVER, NOR ARE THEY TO BE ASSIGNED TO ANY THIRD PARTY WITHOUT FIRST OBTAINING THE EXPRESS WRITTEN PERMISSION FROM PARK SQUARE HOMES.

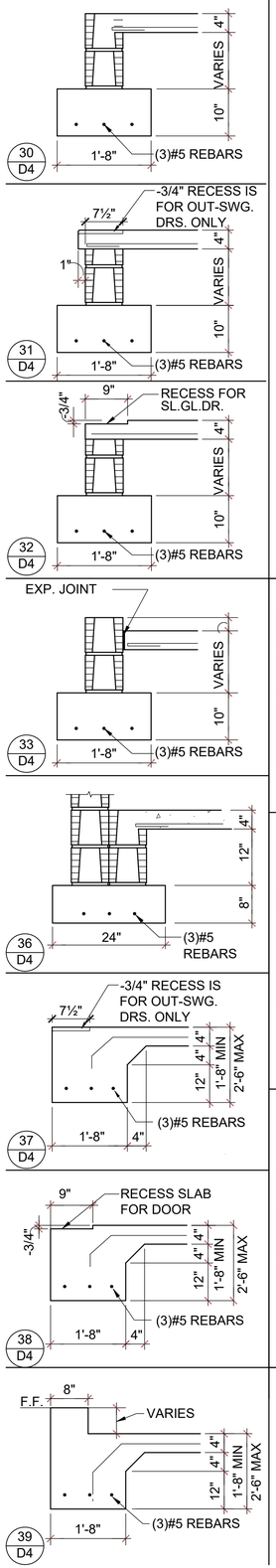

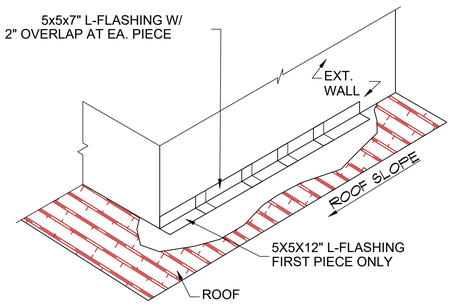

STEP FLASHING DETAIL

N.T.S.

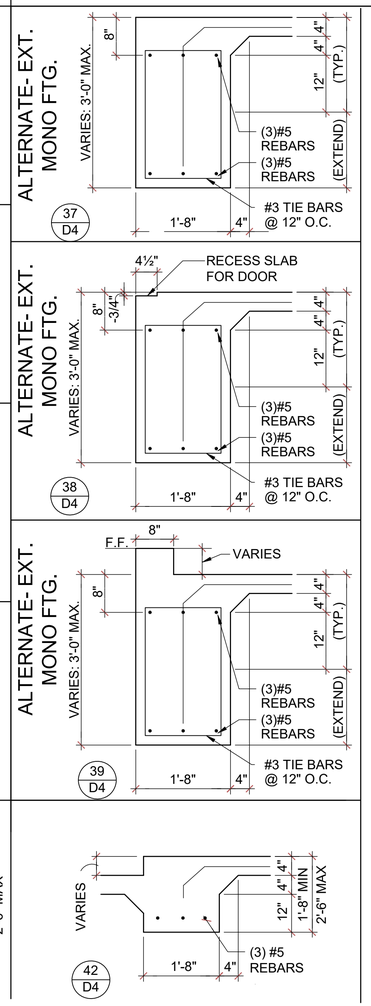

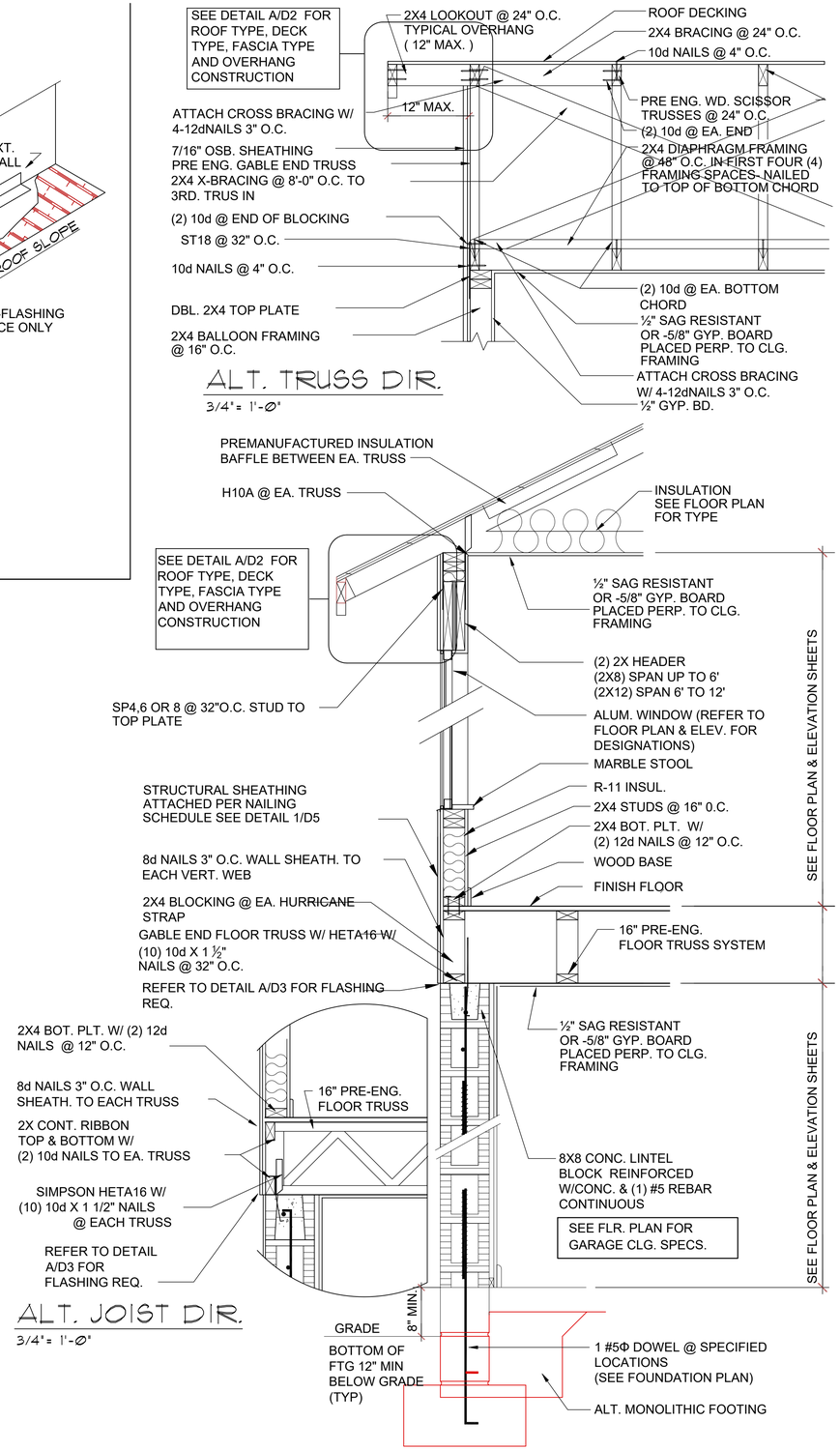

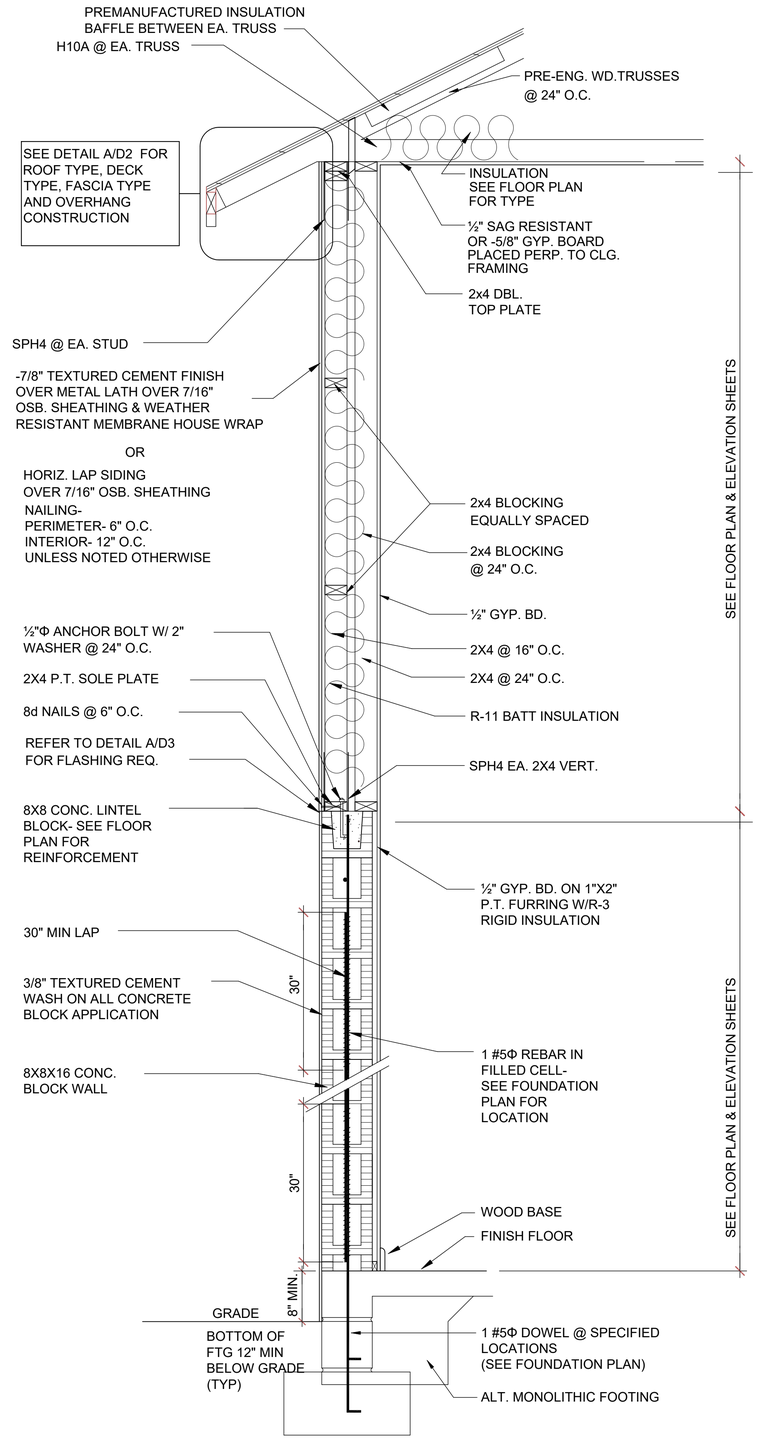

THOMPSON ENGINEERING GROUP, INC.
4401 Vineland Road Suite A6 Orlando, FL 32811
Ph: (407) 734-1450
Fax: (407) 734-1790
www.tegfl.com

MJS designers group
residential•commercial•architecture
815 Orienta Ave. Suite# 1040
Altamonte Springs, FL. 32701
Ph: (407) 629-6711
Fax: (407) 629-6776
www.mjshomedesigns.com

WRITTEN DIMENSIONS SHALL HAVE PRECEDENCE OVER SCALE DIMENSIONS.
Contractors shall verify and be responsible for all dimensions and conditions of the job and MJS, Inc. must be notified in writing of any changes in the dimensions, conditions and specifications appearing on these plans.

40-2922

LARGO (WS)
Lot # - Subdivision
Street Address
City, State. Zip

A division of Park Square Enterprises Inc.
5200 Vineland Rd. Suite #200
Orlando, Fl. 32811
Phone: (407) 529-3000
Park Square HOMES

ISSUE DATE	08/27/2020
REVISIONS	
PROJECT:	00-0000
SCALE:	AS NOTED
DRAWN BY:	S.B.
DESIGNED BY:	MJS

STRUCTURAL DETAILS
SD.4

© COPYRIGHT 2016 PARK SQUARE HOMES RESERVED ITS COMMON LAW COPYRIGHTS IN THESE PLANS, IDEAS AND DESIGNS. THESE PLANS, IDEAS AND DESIGNS ARE NOT TO BE COPIED OR MODIFIED IN ANY MATTER OR FORM WHATSOEVER, NOR ARE THEY TO BE ASSIGNED TO ANY THIRD PARTY WITHOUT FIRST OBTAINING THE EXPRESS WRITTEN PERMISSION FROM PARK SQUARE HOMES.

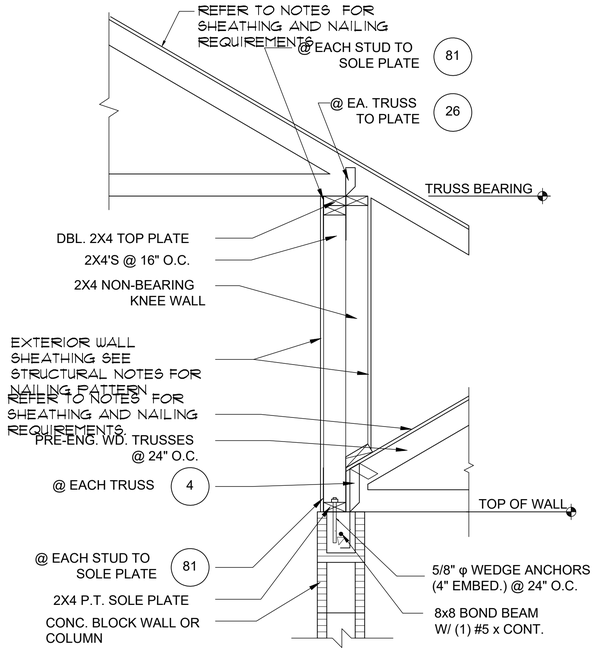

1 D5 DETAIL
1/2"= 1'-0" (11X17) 1"= 1'-0" (22"X34")

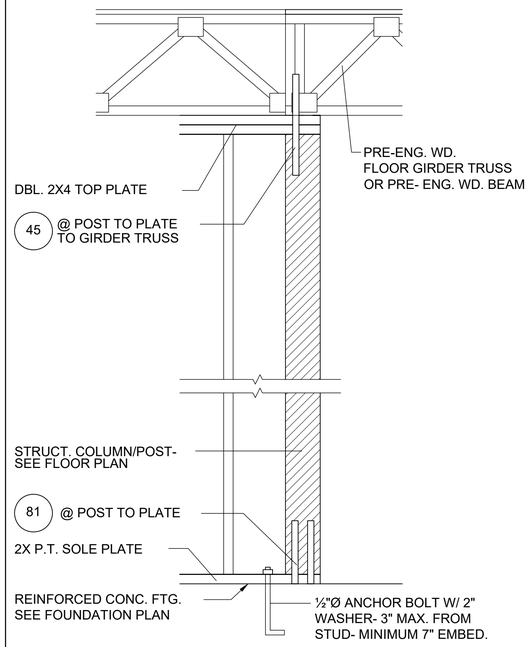

2 D5 DETAIL
1/2"= 1'-0" (11X17) 1"= 1'-0" (22"X34")

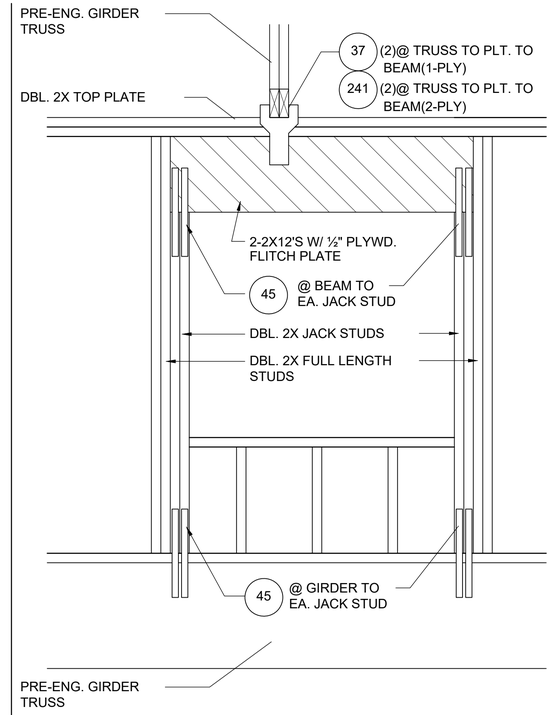

3 D5 DETAIL
1/2"=1'-0" (11X17) 1"=1'-0" (22X34)

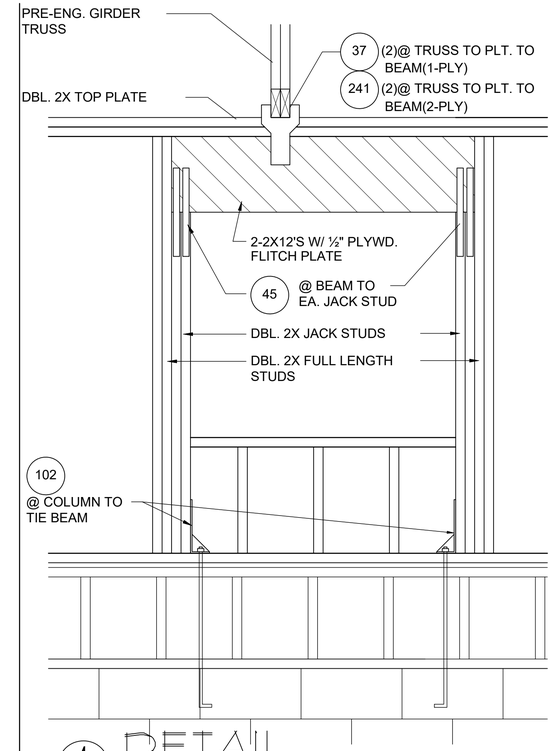

4 D5 DETAIL
1/2"=1'-0" (11X17) 1"=1'-0" (22X34)

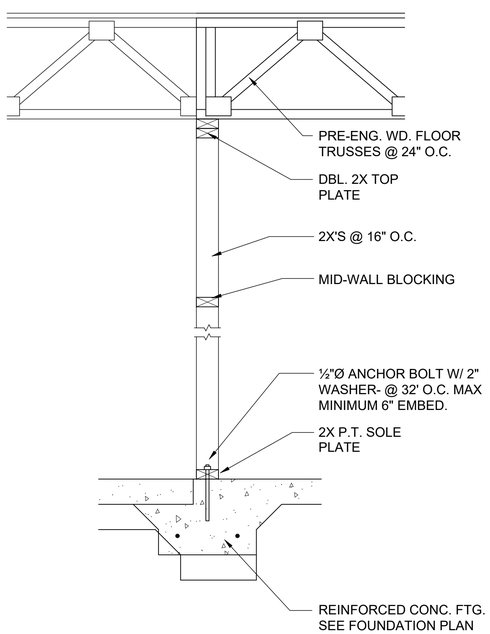

5 D5 DETAIL
1/2"=1'-0" (11X17) 1"=1'-0" (22X34)

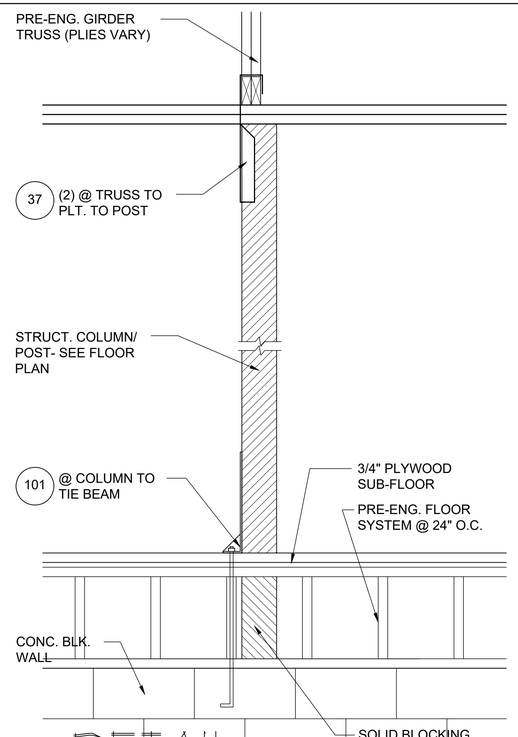

6 D5 DETAIL
1/2"=1'-0" (11X17) 1"=1'-0" (22X34)

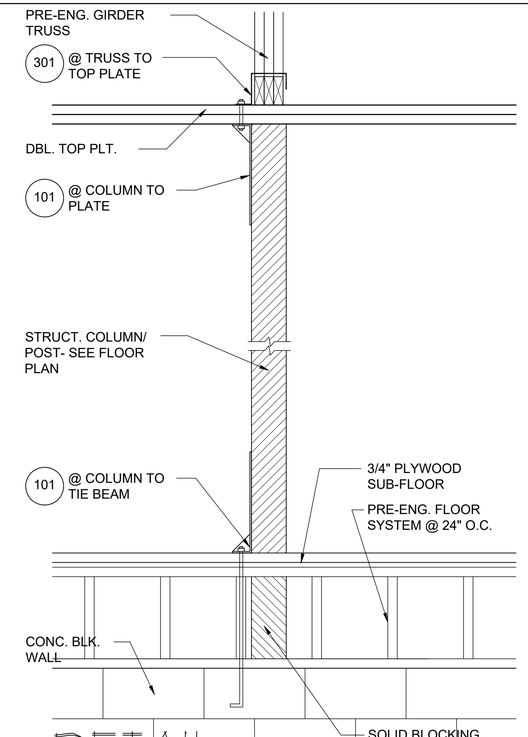

7 D5 DETAIL
1/2"=1'-0" (11X17) 1"=1'-0" (22X34)

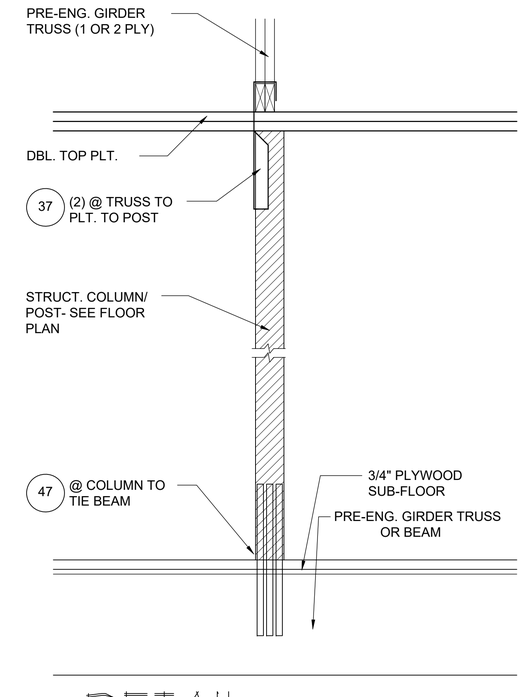

8 D5 DETAIL
1/2"= 1'-0" (11X17) 1"= 1'-0" (22"X34")

THOMPSON ENGINEERING GROUP, INC.
4401 Vineland Road Suite A6 Orlando, FL 32811
Ph: (407) 734-1450
Fax: (407) 734-1790
www.tegfl.com

815 Orienta Ave. Suite# 1040
Altamonte Springs, FL. 32701
Ph: (407) 629-6711
Fax: (407) 629-6776
www.mjshomedesigns.com

WRITTEN DIMENSIONS SHALL HAVE PRECEDENCE OVER SCALE DIMENSIONS.
Contractors shall verify and place all dimensions and conditions of the job and MJS, Inc. must be notified in writing of any changes in the dimensions, conditions and specifications appearing on these plans.

MJS designers group
residential•commercial•architecture

40-2922
LARGO (WS)
Lot # - Subdivision
Street Address
City, State, Zip

A division of Park Square Enterprises Inc.
5200 Vineland Rd. Suite #200
Orlando, Fl. 32811
Phone: (407) 529-3000

Park Square HOMES

ISSUE DATE	08/27/2020
REVISIONS	
PROJECT:	00-0000
SCALE:	AS NOTED
DRAWN BY:	S.B.
DESIGNED BY:	MJS

STRUCTURAL DETAILS
SD.5

© COPYRIGHT 2016 PARK SQUARE HOMES HEREBY RESERVES ITS COMMON LAW COPYRIGHTS IN THESE PLANS, IDEAS AND DESIGN. THESE PLANS, IDEAS AND DESIGNS ARE NOT TO BE COPIED OR MODIFIED IN ANY MATTER OR FORM WHATSOEVER, NOR ARE THEY TO BE ASSIGNED TO ANY THIRD PARTY WITHOUT FIRST OBTAINING THE EXPRESS WRITTEN PERMISSION FROM PARK SQUARE HOMES.

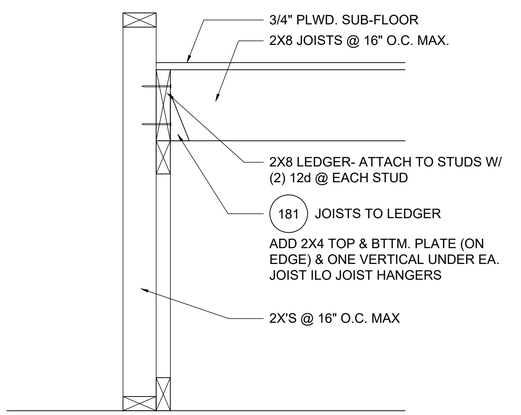

1 D6 TYP. STAIR CONNECT.
3/4"= 1'-0" (11X17) 1½"= 1'-0" (22"X34") PLATFORM FRAMING

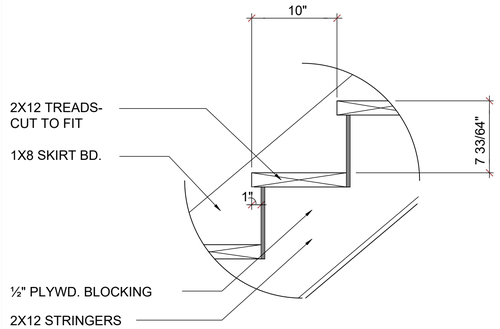

TOTAL RISE: 10'-83/4" (17 RISERS @ 7 33/64" EA.)
TOTAL RUN: 13'-4" (16 TREADS @ 10" EA.)

2 D6 STAIR DETAIL
3/4"= 1'-0" (11X17) 1½"= 1'-0" (22"X34") STAIR DATA

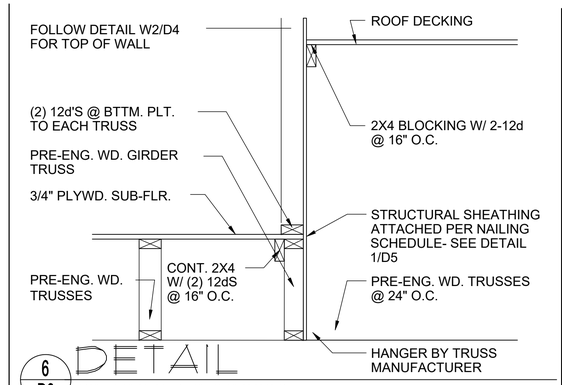

6 D6 DETAIL
1/2"=1'-0" (11X17) 1"=1'-0" (22X34)

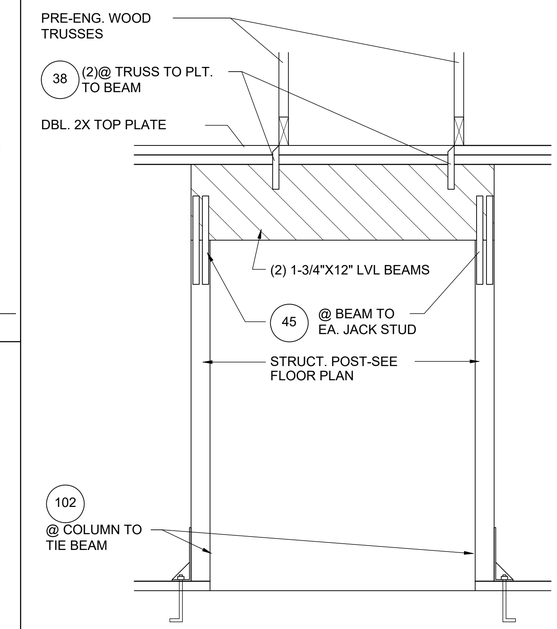

10 D6 DETAIL
1/2"=1'-0" (11X17) 1"=1'-0" (22X34)

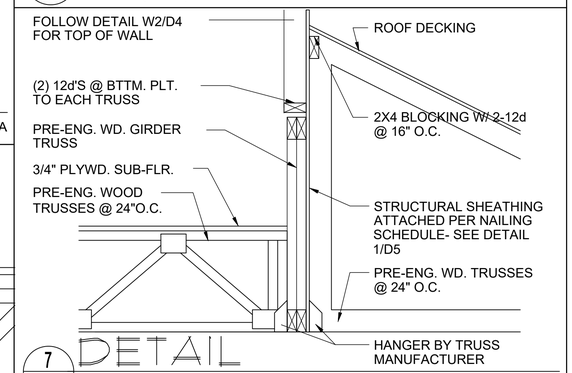

7 D6 DETAIL
1/2"=1'-0" (11X17) 1"=1'-0" (22X34)

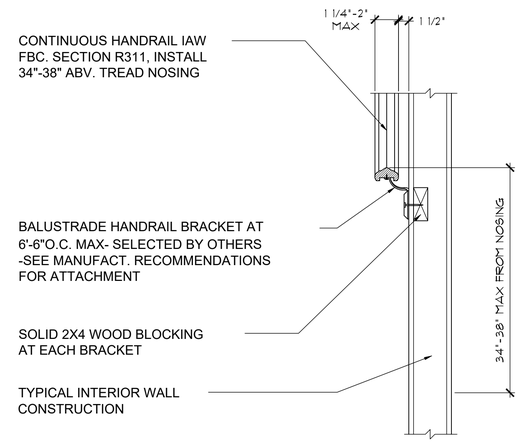

3 D6 TYP. HANDRAIL DET.
3/4"= 1'-0" (11X17) 1½"= 1'-0" (22"X34")

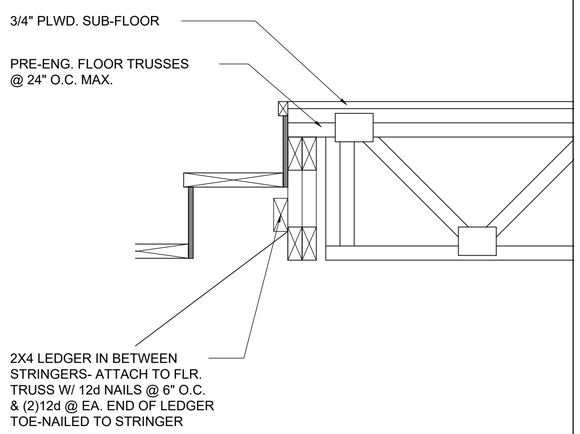

4 D6 TYP. STAIR CONNECT.
3/4"=1'-0" (11X17) 1½"=1'-0" (22"X34") STRINGER TO FLOOR TRUSS

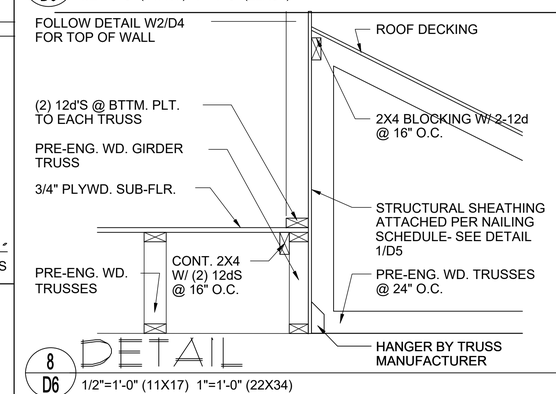

8 D6 DETAIL
1/2"=1'-0" (11X17) 1"=1'-0" (22X34)

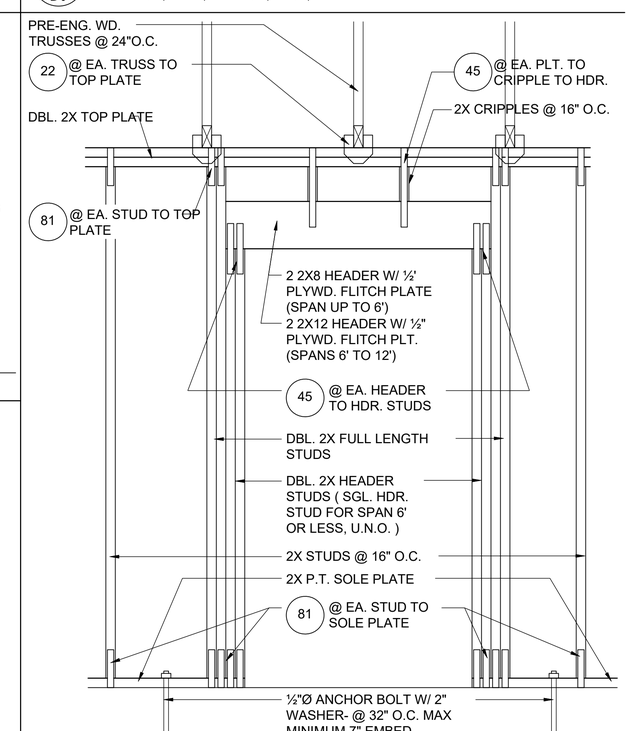

11 D6 DETAIL (BRG. W/ UPLIFT)
1/2"=1'-0" (11X17) 1"=1'-0" (22X34)

NOTES:

STAIRWAY CONSTRUCTION

MAX. HGT. OF RISER TO BE 73/4"

MIN. WIDTH OF TREAD TO BE 10"(EXCLUSIVE OF NOSING)

ALL TREADS LESS THAN 10" IN WIDTH SHALL HAVE APPROX. 1" OF NOSING

3/16" MAX. VARIATION IN RISERS/TREADS ADJACENT TO EACH OTHER

3/8" MAX. VARIATION IN ANY RISER/TREAD

HAND RAIL CIRCULAR CROSS SECTION DIA. TO BE 1 1/4" - 2" OR TO PROVIDE EQUIVALENT GRASPABILITY.

WINDERS: MIN. 6" WIDE @ NARROW END

34"-38" HANDRAIL HGT.

HEADROOM CLEARANCE MIN. 6'-8"

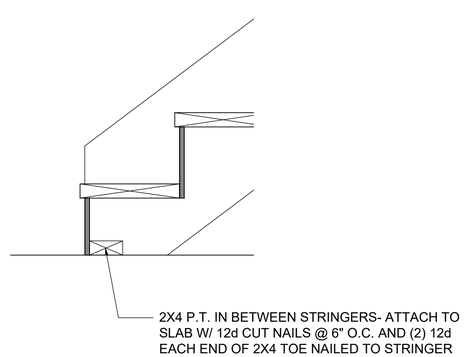

5 D6 TYP. STAIR CONNECT.
3/4"= 1'-0" (11X17) 1½"= 1'-0" (22"X34") STRINGER TO FLOOR

THOMPSON ENGINEERING GROUP, INC.
4401 Vineland Road Suite A6 Orlando, FL 32811
Ph: (407) 734-1450
Fax: (407) 734-1790
www.tegfl.com

MJS designers group
residential•commercial•architecture
815 Orienta Ave. Suite# 1040
Altamonte Springs, FL. 32701
Ph: (407) 629-6711
Fax: (407) 629-6776
www.mjshomedesigns.com

WRITTEN DIMENSIONS SHALL HAVE PRECEDENCE OVER SCALE DIMENSIONS.
Contractors shall verify and be responsible for all dimensions and conditions of the job and M.J.S., Inc. must be notified in writing of any changes in the dimensions, conditions and specifications appearing on these plans.

40-2922
LARGO (WS)
Lot # - Subdivision
Street Address
City, State. Zip

A division of Park Square Enterprises Inc.
5200 Vineland Rd. Suite #200
Orlando, Fl. 32811
Phone: (407) 529-3000

Park Square HOMES

ISSUE DATE	08/27/2020
REVISIONS	
PROJECT:	00-0000
SCALE:	AS NOTED
DRAWN BY:	S.B.
DESIGNED BY:	MJS

STRUCTURAL DETAILS
SD.6

© COPYRIGHT 2016 PARK SQUARE HOMES HERBERT RESERVES ITS COMMON LAW COPYRIGHTS IN THESE PLANS, IDEAS AND DESIGN. THESE PLANS, IDEAS AND DESIGNS, ARE NOT TO BE COPIED OR MODIFIED IN ANY MATTER OR FORM WHATSOEVER, NOR ARE THEY TO BE ASSIGNED TO ANY THIRD PARTY WITHOUT FIRST OBTAINING THE EXPRESS WRITTEN PERMISSION FROM PARK SQUARE HOMES.

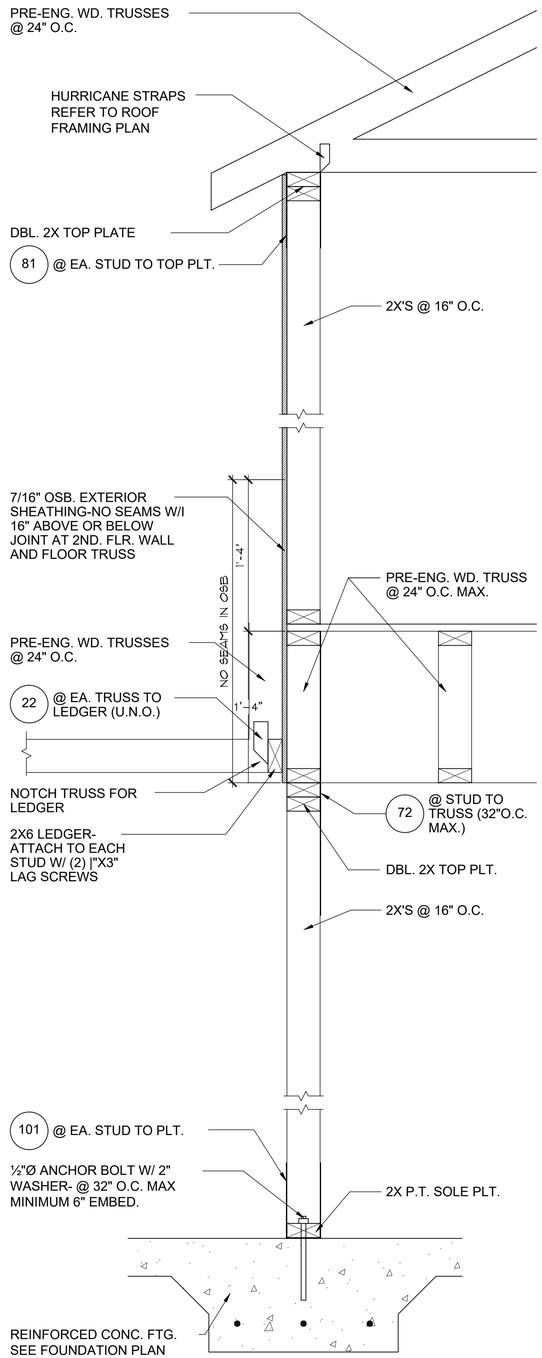

3 D7 DETAIL
3/4"=1'-0" (11X17) 1½"=1'-0" (22X34)

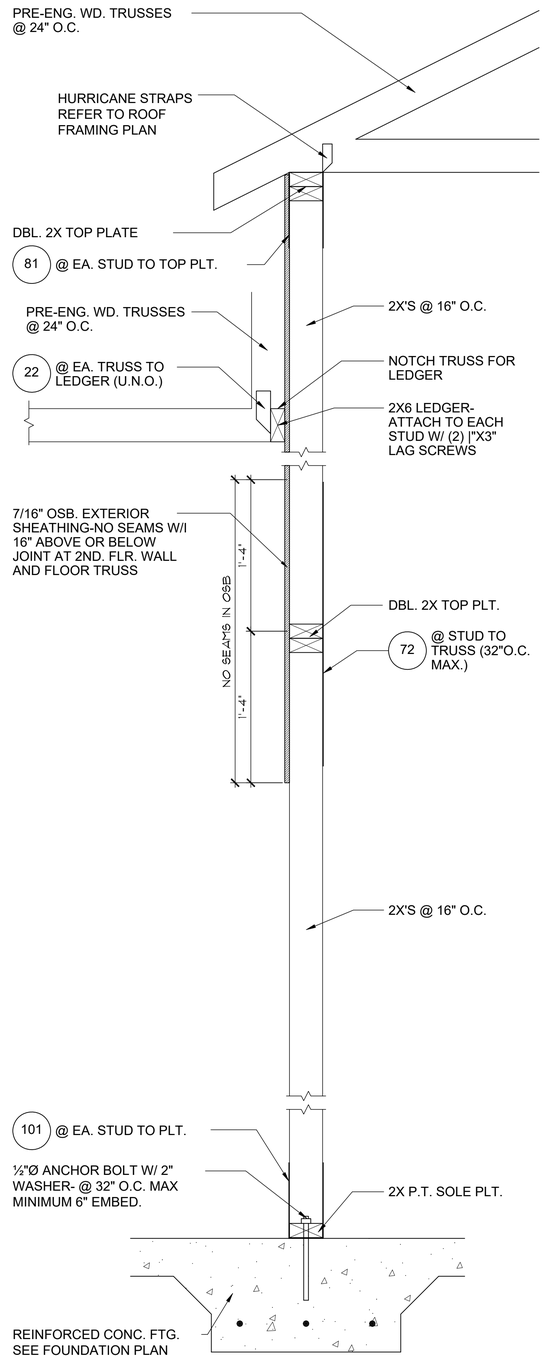

4 D7 DETAIL
3/4"=1'-0" (11X17) 1½"=1'-0" (22X34)

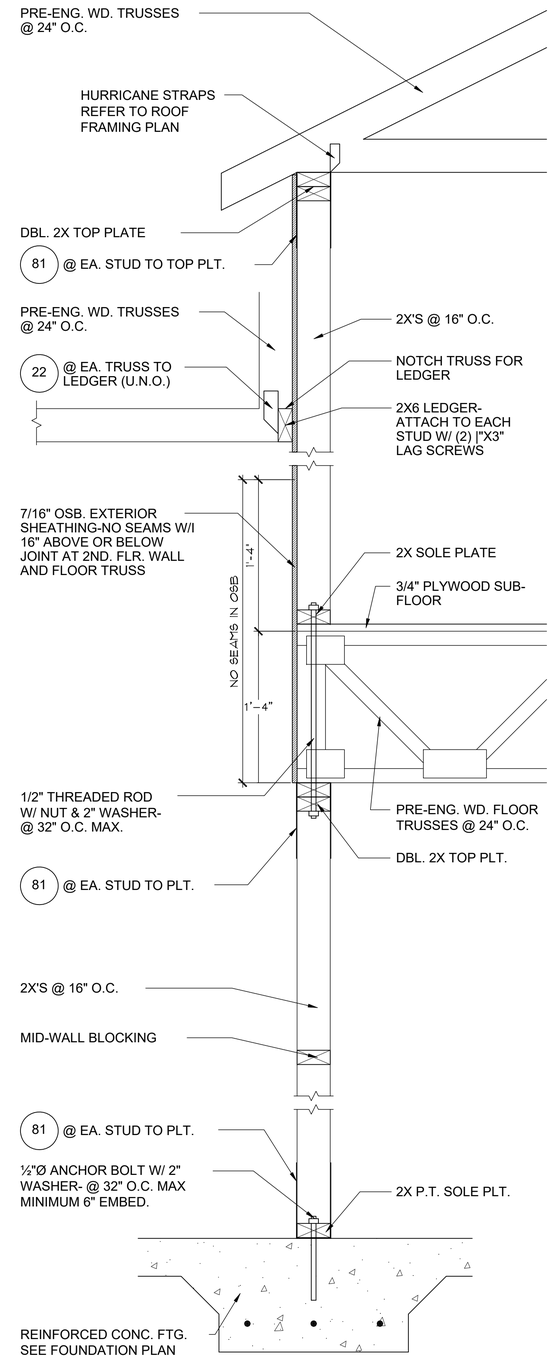

5 D7 DETAIL
3/4"=1'-0" (11X17) 1½"=1'-0" (22X34)

THOMPSON ENGINEERING GROUP, INC.
4401 Vineland Road Suite A6 Orlando, FL 32811
Ph: (407) 734-1450
Fax: (407) 734-1790
www.tegfl.com

815 Orienta Ave. Suite# 1040
Altamonte Springs, FL. 32701
Ph: (407) 629-6711
Fax: (407) 629-6776
www.mjshomedesigns.com

MJS designers group
residential•commercial•architecture

WRITTEN DIMENSIONS SHALL HAVE PRECEDENCE OVER SCALE DIMENSIONS.
Contractors shall verify and be responsible for all dimensions and conditions of the job and MJS, Inc. must be notified in writing of any changes in the dimensions, conditions and specifications appearing on these plans.

40-2922

LARGO (WS)
Lot # - Subdivision
Street Address
City, State, Zip

A division of Park Square Enterprises Inc.
5200 Vineland Rd. Suite #200
Orlando, Fl. 32811
Phone: (407) 529-3000

Park Square HOMES

ISSUE DATE	08/27/2020
REVISIONS	
PROJECT:	00-0000
SCALE:	AS NOTED
DRAWN BY:	S.B.
DESIGNED BY:	MJS

STRUCTURAL DETAILS
SD.7

© COPYRIGHT 2016 PARK SQUARE HOMES HEREBY RESERVES ITS COMMON LAW COPYRIGHTS IN THESE PLANS, IDEAS AND DESIGN. THESE PLANS, IDEAS AND DESIGNS ARE NOT TO BE COPIED OR MODIFIED IN ANY MATTER OR FORM WHATSOEVER, NOR ARE THEY TO BE ASSIGNED TO ANY THIRD PARTY WITHOUT FIRST OBTAINING THE EXPRESS WRITTEN PERMISSION FROM PARK SQUARE HOMES.

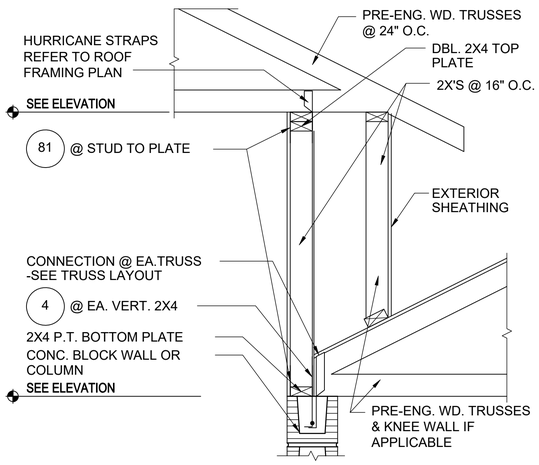

1 / D8 DETAIL

1/2"=1'-0" (11X17) 1"=1'-0" (22X34)

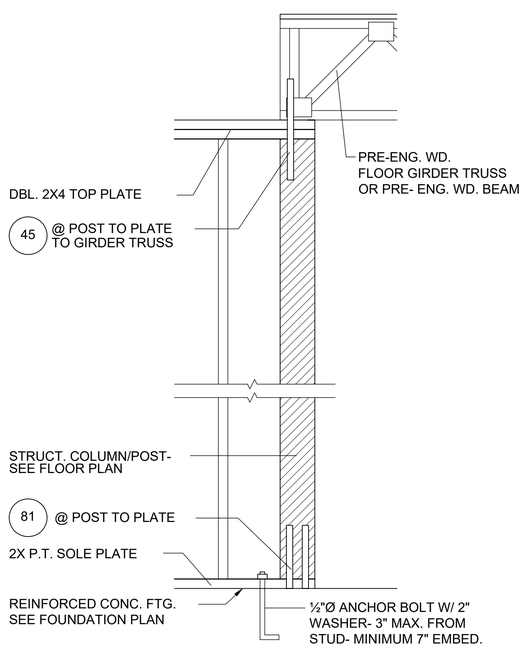

2 / D8 DETAIL

1/2"=1'-0" (11X17) 1"=1'-0" (22X34)

3/4"=1'-0" (11X17) 1½"=1'-0" (22X34)

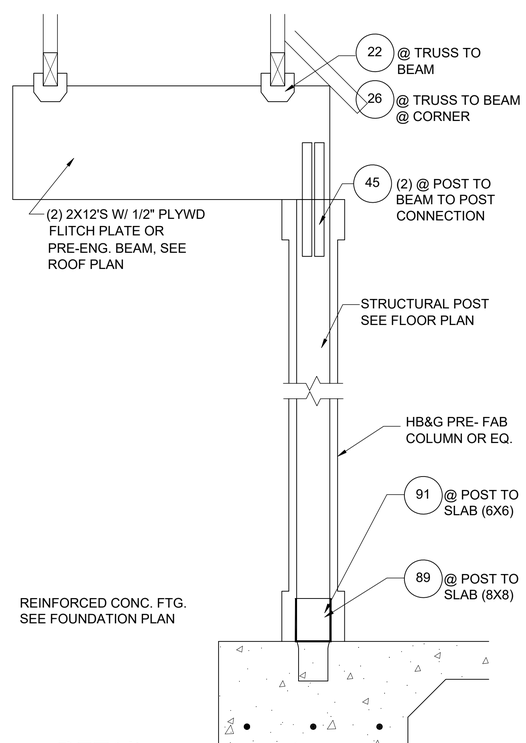

3 / D8 DETAIL

NOTE:

1/2" PLYWOOD OR 7/16" O.S.B. TO BE USED AS UPLIFT RESISTANCE NO OTHER FASTENERS REQ'D. EXCEPT AS NOTED ON PLANS IN TWO STORY FRAME APPLICATIONS, SHEATHING SHALL EXTEND MIN. 1'-0" W/O BREAK ABV. 2nd FLOOR BOTTOM PLT. TO T.O.M.

NAILING SCHEDULE:

(2)ROWS @ 3" O.C. AT TOP AND (1)ROW AT BOTTOM OF WALL, 6" O.C. ALL OTHER EDGES AND 12" IN FIELD. BLOCKING SHALL BE PLACED AT ALL SHEATHING JOINTS.

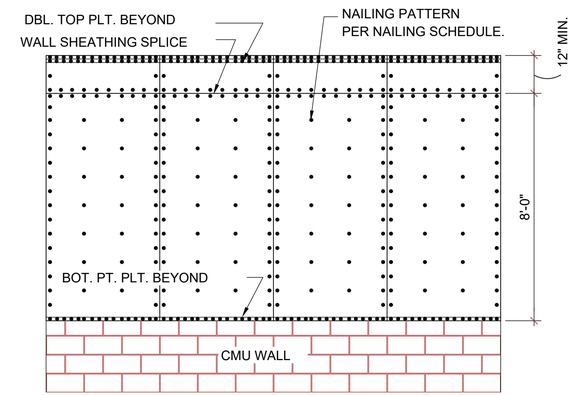

A SHEATHING ELEV. BALLOON FRAMING N.T.S.

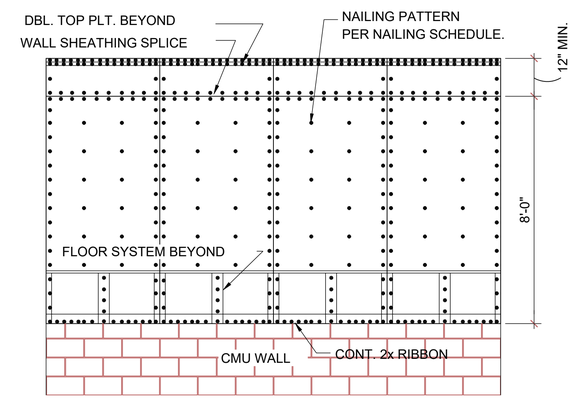

B SHEATHING ELEV. 2-STORY FRAMING N.T.S.

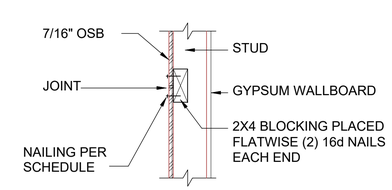

C SHEATHING BLOCKING @HORIZONTAL JOINTS N.T.S

4 / D8 SHEATHING UPLIFT DETAILS

N.T.S.

THOMPSON ENGINEERING GROUP, INC.
4401 Vineland Road Suite A6 Orlando, FL 32811
Ph: (407) 734-1450
Fax: (407) 734-1790
www.tegfl.com

MJS designers group
residential•commercial•architecture
815 Orienta Ave. Suite# 1040
Altamonte Springs, FL. 32701
Ph: (407) 629-6711
Fax: (407) 629-6776
www.mjshomedesigns.com

WRITTEN DIMENSIONS SHALL HAVE PRECEDENCE OVER SCALE DIMENSIONS.
Contractors shall verify and be responsible for all dimensions and conditions of the job and MJS, Inc. must be notified in writing of any changes in the dimensions, conditions and specifications appearing on these plans.

40-2922

LARGO (WS)
Lot # - Subdivision
Street Address
City, State. Zip

A division of Park Square Enterprises Inc.
5200 Vineland Rd. Suite #200
Orlando, Fl. 32811
Phone: (407) 529-3000
Park Square HOMES

ISSUE DATE	08/27/2020
REVISIONS	
PROJECT:	00-0000
SCALE:	AS NOTED
DRAWN BY:	S.B.
DESIGNED BY:	MJS

STRUCTURAL DETAILS

SD.8

© COPYRIGHT 2016 PARK SQUARE HOMES HEREBY RESERVES ITS COMMON LAW COPYRIGHTS IN THESE PLANS, IDEAS AND DESIGNS. THESE PLANS, IDEAS AND DESIGNS ARE NOT TO BE COPIED OR MODIFIED IN ANY MATTER OR FORM WHATSOEVER, NOR ARE THEY TO BE ASSIGNED TO ANY THIRD PARTY WITHOUT FIRST OBTAINING THE EXPRESS WRITTEN PERMISSION FROM PARK SQUARE HOMES.