4842 (A,B,C)

SANDALWOOD

PARADISO GRANDE

40' X 73'-4"

REVISION SCHEDULE			
NO.	DATE	DESCRIPTION	BY
0	04-09-21	-THESE PLANS CREATED USING 4831 SAN CLEMENTE PLANS DATED 03-04-21 PROVIDED BY PSH	DE
1	06-25-21	-REVISED 2ND FLOOR EXTERIOR FINISH FROM STUCCO TO SMOOTH PANEL BOARD	DH
		-REVISE ALL ARCH SOFFITS TO FLAT	
		-CODE UPDATED TO FBCR 2020, 7TH ED.	
		& NEC 2017	

SHEET INDEX- ELEVATION "A"

00	COVER SHEET
01.0	FOUNDATION PLAN
02A.0	FLOOR PLAN W/ DIMENSIONS
03A.0	FLOOR PLAN W/ NOTES
04A.0	UPPER FLOOR PLAN W/ DIMENSIONS
05A.0	UPPER FLOOR PLAN W/ NOTES
06A.0	EXTERIOR ELEVATIONS- FRONT/ REAR
07A.0	EXTERIOR ELEVATIONS- LEFT/ RIGHT
08	CROSS SECTION AND INTERIOR ELEVATIONS
09A.0	ELECTRICAL PLAN
10A.0	UPPER ELECTRICAL PLAN
11A.0	TRUSS LAYOUT
12A.0	UPPER TRUSS LAYOUT
13A.0	PRECAST LINTEL LAYOUT
14	TYPICAL DETAILS/CONNECTOR SCHEDULE
15	TYPICAL DETAILS
16	TYPICAL DETAILS
17	TYPICAL DETAILS
18	TYPICAL DETAILS
D1	TYPICAL STRUCTURAL DETAILS
D2.0	TYPICAL STRUCTURAL DETAILS
D3	TYPICAL STRUCTURAL DETAILS
D4	TYPICAL STRUCTURAL DETAILS
D5	TYPICAL STRUCTURAL DETAILS

SHEET INDEX- ELEVATION "B"

00	COVER SHEET
01.0	FOUNDATION PLAN
02B.0	FLOOR PLAN W/ DIMENSIONS
03B.0	FLOOR PLAN W/ NOTES
04B.0	UPPER FLOOR PLAN W/ DIMENSIONS
05B.0	UPPER FLOOR PLAN W/ NOTES
06B.0	EXTERIOR ELEVATIONS- FRONT/ REAR
07B.0	EXTERIOR ELEVATIONS- LEFT/ RIGHT
08	CROSS SECTION AND INTERIOR ELEVATIONS
09B.0	ELECTRICAL PLAN
10B.0	UPPER ELECTRICAL PLAN
11B.0	TRUSS LAYOUT
12B.0	UPPER TRUSS LAYOUT
13B.0	PRECAST LINTEL LAYOUT
14	TYPICAL DETAILS/CONNECTOR SCHEDULE
15	TYPICAL DETAILS
16	TYPICAL DETAILS
17	TYPICAL DETAILS
18	TYPICAL DETAILS
D1	TYPICAL STRUCTURAL DETAILS
D2.0	TYPICAL STRUCTURAL DETAILS
D3	TYPICAL STRUCTURAL DETAILS
D4	TYPICAL STRUCTURAL DETAILS
D5	TYPICAL STRUCTURAL DETAILS

SHEET INDEX- ELEVATION "C"

00	COVER SHEET
01.0	FOUNDATION PLAN
02C.0	FLOOR PLAN W/ DIMENSIONS
03C.0	FLOOR PLAN W/ NOTES
04C.0	UPPER FLOOR PLAN W/ DIMENSIONS
05C.0	UPPER FLOOR PLAN W/ NOTES
06C.0	EXTERIOR ELEVATIONS- FRONT/ REAR
07C.0	EXTERIOR ELEVATIONS- LEFT/ RIGHT
08	CROSS SECTION AND INTERIOR ELEVATIONS
09C.0	ELECTRICAL PLAN
10C.0	UPPER ELECTRICAL PLAN
11C.0	TRUSS LAYOUT
12C.0	UPPER TRUSS LAYOUT
13C.0	PRECAST LINTEL LAYOUT
14	TYPICAL DETAILS/CONNECTOR SCHEDULE
15	TYPICAL DETAILS
16	TYPICAL DETAILS
17	TYPICAL DETAILS
18	TYPICAL DETAILS
D1	TYPICAL STRUCTURAL DETAILS
D2.0	TYPICAL STRUCTURAL DETAILS
D3	TYPICAL STRUCTURAL DETAILS
D4	TYPICAL STRUCTURAL DETAILS
D5	TYPICAL STRUCTURAL DETAILS

THIS STRUCTURE IS DESIGNED TO WITHSTAND 140 MPH WINDS PER THE 7th EDITION, 2020 OF THE FLORIDA BUILDING CODE RESIDENTIAL AND IS CERTIFIED AS SUCH

LOT: 0000, PARADISO GRANDE

© COPYRIGHT 2015
Park Square Homes hereby reserves its common law copyrights and other copyrights in these plans, ideas, and design. These plans, ideas and designs are not to be copied or changed in any manner or form whatsoever, nor are they to be assigned to any third party without first obtaining the express written permission from Park Square Homes.

PARADISO GRANDE

REVISIONS	BY
06-25-21	DH

Engineering By:
DBE and C
MICHAEL A. THOMPSON
PE 47509
PHONE 407-721-2292

A DIVISION OF PARK SQUARE ENTERPRISES, INC.
5200 Vineland Road, Suite 200
Orlando, Florida 32811
Phone: (407) 529 - 3000

Park Square HOMES

COVER SHEET

SANDALWOOD

PARADISO GRANDE

4842

DATE 04-09-21

SCALE AS NOTED

DRAWN RDC

JOB 4842

SHEET 00 OF 00 SHEETS

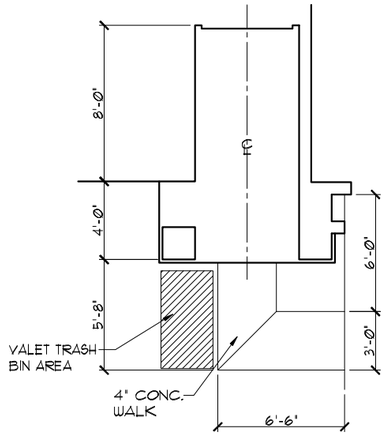

SIDEWALK LAYOUT

1/8"=1'-0" (11X17) 1/4"=1'-0" (22X34)

FOUNDATION NOTES

1. CONTRACTOR VERIFY ALL DIMENSIONS ON JOB SITE.
2. ⊡ DENOTES FILL CELL REINF. W/ CONC. W/ (1) #5 REBAR. GRADE 60
3. ■ DENOTES FILL CELL REINF. W/ CONC. W/ (2) #5 REBAR. GRADE 60
4. DO NOT SCALE PRINTS! CONSTRUCTION TO BE FROM CALCULATED DIMENSIONS ONLY. ANY DISCREPANCIES OR ERRORS TO BE REPORTED PROMPTLY TO SUPERVISOR FOR CLARIFICATION.
5. WATER HEATER T & P RELIEF VALVE SHALL BE FULL SIZE TO EXTERIOR. WATER HEATER AT OR ABOVE FLOOR LEVEL SHALL BE IN A PAN WITH DRAIN TO EXTERIOR. WATER HEATER SHALL HAVE APPROVED THERMAL EXPANSION DEVICE.
6. ▩ DENOTES FLOOR SLAB OF PLANT MIX CONCRETE 2500 P.S.I. 4" THICK WITH 6X6 10/10 GAUGE REINFORCING MAT. WITH MIN. 1" COVER. TERMITE TREATED SOIL WITH .006mm (6 mil) POLYETHYLENE VAPOR BARRIER OVER COMPACTED CLEAN FILL. WWF SHALL BE PLACED IN MIDDLE TO UPPER THIRD OF SLAB AND SUPPORTED ON APPROVED SLAB BOLSTERS. *FIBER MESH REINFORCEMENT MAY BE USED AS ALTERNATIVE TO WIRE MESH.
7. PAVERS MAY BE USED ILO CONCRETE SLABS IN PATIO, PORCH, DRIVE AND WALKWAY AREAS. DELETE SLAB IN AREAS PAVERS ARE USED.
8. (X/X) STANDARD FOOTING
9. MECHANICAL EQUIP. LOCATIONS WILL BE DETERMINED BY COMMUNITY AND COUNTY CODES.
10. IN LIEU OF TREATING THE SOIL, AN ALTERNATIVE TO TERMITE TREATED SOIL CAN BE TERMICIDE.
11. BORA-CARE TO BE APPLIED ON INTERIOR WALLS IAW MANUFACTURER'S INSTRUCTIONS AND SPECIFICATIONS, PURSUANT TO CH.402 FLORDA BUILDING CODE.
12. TYP. TUB/SHWR. VALVE & DRAIN LOCATIONS

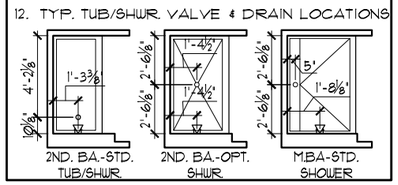

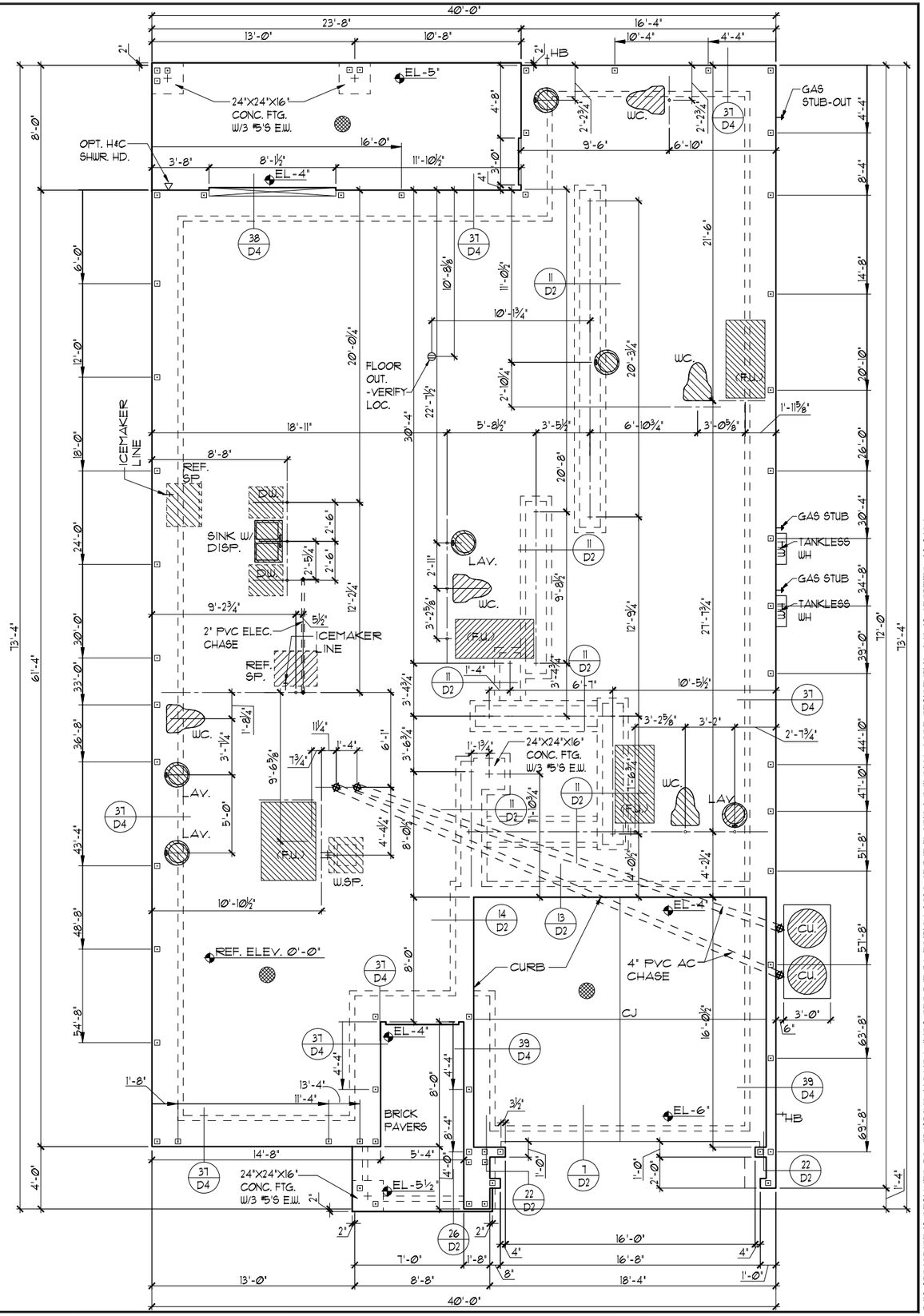

FOUNDATION PLAN "A"

1/8"=1'-0" (11X17) 1/4"=1'-0" (22X34)

THIS STRUCTURE IS DESIGNED TO WITHSTAND 140 MPH WINDS PER THE 7th EDITION, 2020 OF THE FLORIDA BUILDING CODE RESIDENTIAL AND IS CERTIFIED AS SUCH

LOT: 0000, PARADISO GRANDE

© COPYRIGHT 2015
Park Square Homes hereby reserves its common law copyrights and other copyrights in these plans, ideas, and design. These plans, ideas and designs are not to be copied or changed in any manner or form whatsoever, nor are they to be assigned to any third party without first obtaining the express written permission from Park Square Homes.

PARADISO GRANDE

REVISIONS	BY
06-25-21	DH

Engineering By:
DBE and C
MICHAEL A. THOMPSON
PE 47509
PHONE 407-721-2292

A DIVISION OF PARK SQUARE ENTERPRISES, INC.
5200 Vineland Road, Suite 200
Orlando, Florida 32811
Phone: (407) 529 - 3000

Park Square HOMES

FOUNDATION PLAN

SANDALWOOD
PARADISO GRANDE

4842

DATE	04-09-21
SCALE	AS NOTED
DRAWN	RDC
JOB	4842
SHEET	01A.0
OF	00 SHEETS

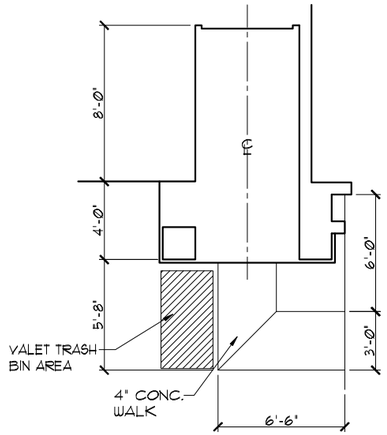

SIDEWALK LAYOUT

1/8"=1'-0" (11X17) 1/4"=1'-0" (22X34)

FOUNDATION NOTES

1. CONTRACTOR VERIFY ALL DIMENSIONS ON JOB SITE.
2. ⊡ DENOTES FILL CELL REINF. W/ CONC. W/ (1) #5 REBAR. GRADE 60
3. ■ DENOTES FILL CELL REINF. W/ CONC. W/ (2) #5 REBAR. GRADE 60
4. DO NOT SCALE PRINTS! CONSTRUCTION TO BE FROM CALCULATED DIMENSIONS ONLY. ANY DISCREPANCIES OR ERRORS TO BE REPORTED PROMPTLY TO SUPERVISOR FOR CLARIFICATION.
5. WATER HEATER T & P RELIEF VALVE SHALL BE FULL SIZE TO EXTERIOR. WATER HEATER AT OR ABOVE FLOOR LEVEL SHALL BE IN A PAN WITH DRAIN TO EXTERIOR. WATER HEATER SHALL HAVE APPROVED THERMAL EXPANSION DEVICE.
6. ▩ DENOTES FLOOR SLAB OF PLANT MIX CONCRETE 2500 P.S.I. 4" THICK WITH 6X6 10/10 GAUGE REINFORCING MAT. WITH MIN. 1" COVER. TERMITE TREATED SOIL WITH .006mm (6 mil) POLYETHYLENE VAPOR BARRIER OVER COMPACTED CLEAN FILL. WWF SHALL BE PLACED IN MIDDLE TO UPPER THIRD OF SLAB AND SUPPORTED ON APPROVED SLAB BOLSTERS. *FIBER MESH REINFORCEMENT MAY BE USED AS ALTERNATIVE TO WIRE MESH.
7. PAVERS MAY BE USED ILO CONCRETE SLABS IN PATIO, PORCH, DRIVE AND WALKWAY AREAS. DELETE SLAB IN AREAS PAVERS ARE USED.
8. (X/X) STANDARD FOOTING
9. MECHANICAL EQUIP. LOCATIONS WILL BE DETERMINED BY COMMUNITY AND COUNTY CODES.
10. IN LIEU OF TREATING THE SOIL, AN ALTERNATIVE TO TERMITE TREATED SOIL CAN BE TERMICIDE.
11. BORA-CARE TO BE APPLIED ON INTERIOR WALLS IAW MANUFACTURER'S INSTRUCTIONS AND SPECIFICATIONS, PURSUANT TO CH.402 FLORDA BUILDING CODE.
12. TYP. TUB/SHWR. VALVE & DRAIN LOCATIONS

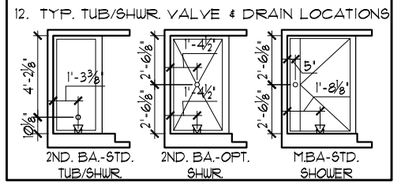

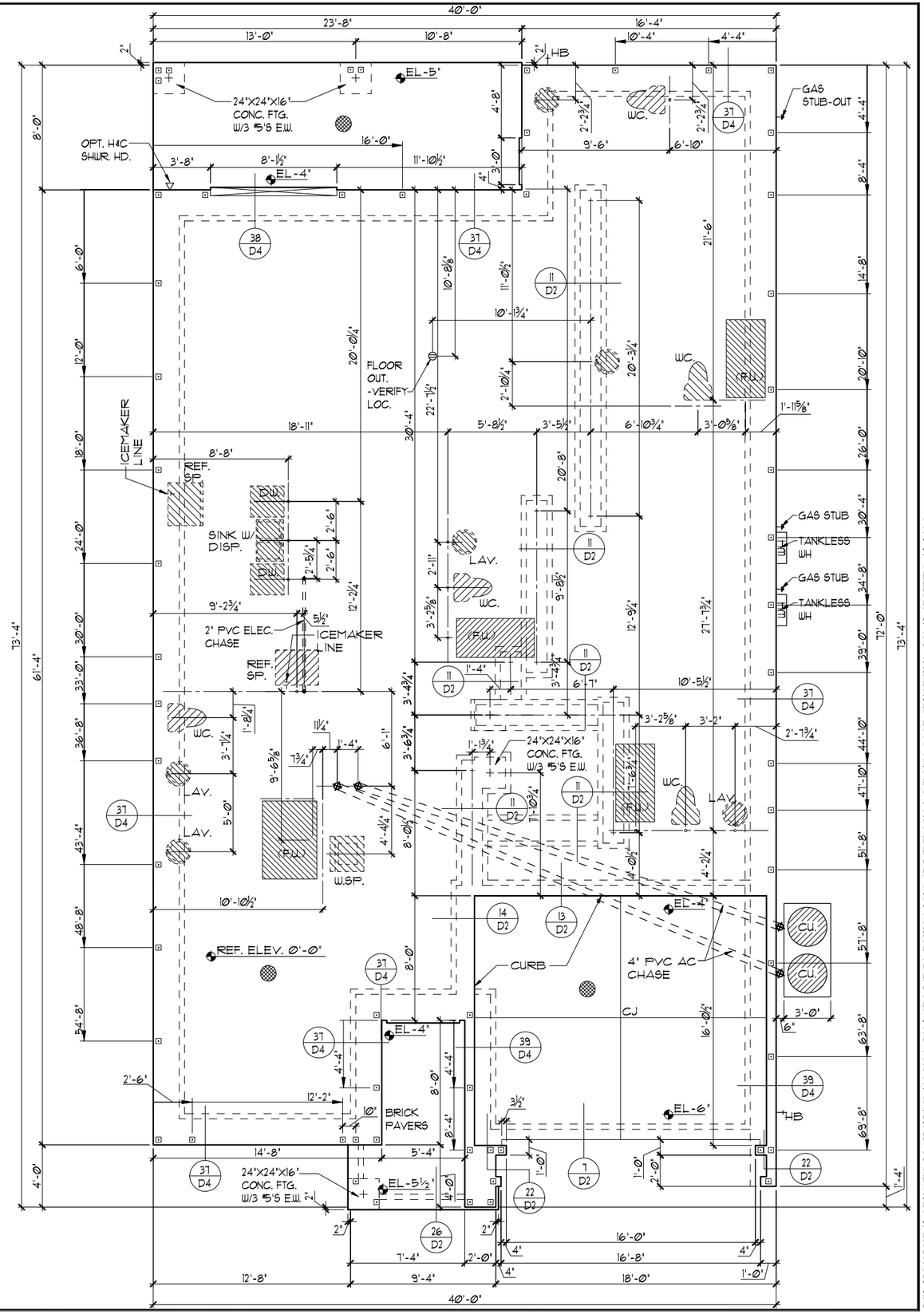

FOUNDATION PLAN "B"

1/8"=1'-0" (11X17) 1/4"=1'-0" (22X34)

THIS STRUCTURE IS DESIGNED TO WITHSTAND 140 MPH WINDS PER THE 7th EDITION, 2020 OF THE FLORIDA BUILDING CODE RESIDENTIAL AND IS CERTIFIED AS SUCH

LOT: 0000, PARADISO GRANDE

© COPYRIGHT 2015
Park Square Homes hereby reserves its common law copyrights and other copyrights in these plans, ideas, and design. These plans, ideas and designs are not to be copied or changed in any manner or form whatsoever, nor are they to be assigned to any third party without first obtaining the express written permission from Park Square Homes.

PARADISO GRANDE

REVISIONS	BY
06-25-21	DH

Engineering By:
DBE and C
MICHAEL A. THOMPSON
PE 47509
PHONE 407-721-2292

A DIVISION OF PARK SQUARE ENTERPRISES, INC.
5200 Vineland Road, Suite 200
Orlando, Florida 32811
Phone: (407) 529 - 3000

Park Square HOMES

FOUNDATION PLAN

SANDALWOOD

PARADISO GRANDE

4842

DATE	04-09-21
SCALE	AS NOTED
DRAWN	RDC
JOB	4842
SHEET	01B.0
OF	00 SHEETS

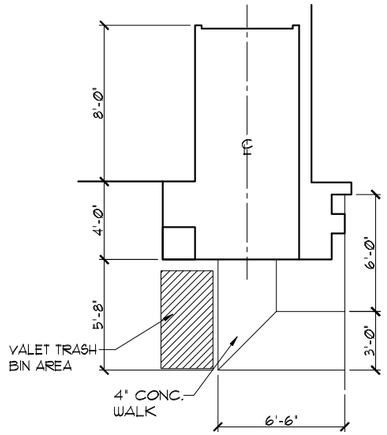

SIDEWALK LAYOUT

1/8"=1'-0" (11X17) 1/4"=1'-0" (22X34)

FOUNDATION NOTES

1. CONTRACTOR VERIFY ALL DIMENSIONS ON JOB SITE.
2. ⊡ DENOTES FILL CELL REINF. W/ CONC. W/ (1) #5 REBAR. GRADE 60
3. ■ DENOTES FILL CELL REINF. W/ CONC. W/ (2) #5 REBAR. GRADE 60
4. DO NOT SCALE PRINTS! CONSTRUCTION TO BE FROM CALCULATED DIMENSIONS ONLY. ANY DISCREPANCIES OR ERRORS TO BE REPORTED PROMPTLY TO SUPERVISOR FOR CLARIFICATION.
5. WATER HEATER T & P RELIEF VALVE SHALL BE FULL SIZE TO EXTERIOR. WATER HEATER AT OR ABOVE FLOOR LEVEL SHALL BE IN A PAN WITH DRAIN TO EXTERIOR. WATER HEATER SHALL HAVE APPROVED THERMAL EXPANSION DEVICE.
6. ▩ DENOTES FLOOR SLAB OF PLANT MIX CONCRETE 2500 P.S.I. 4" THICK WITH 6X6 10/10 GAUGE REINFORCING MAT. WITH MIN. 1" COVER. TERMITE TREATED SOIL WITH .006mm (6 mil) POLYETHYLENE VAPOR BARRIER OVER COMPACTED CLEAN FILL. WWF SHALL BE PLACED IN MIDDLE TO UPPER THIRD OF SLAB AND SUPPORTED ON APPROVED SLAB BOLSTERS. *FIBER MESH REINFORCEMENT MAY BE USED AS ALTERNATIVE TO WIRE MESH.
7. PAVERS MAY BE USED ILO CONCRETE SLABS IN PATIO, PORCH, DRIVE AND WALKWAY AREAS. DELETE SLAB IN AREAS PAVERS ARE USED.
8. (X/X) STANDARD FOOTING
9. MECHANICAL EQUIP. LOCATIONS WILL BE DETERMINED BY COMMUNITY AND COUNTY CODES.
10. IN LIEU OF TREATING THE SOIL, AN ALTERNATIVE TO TERMITE TREATED SOIL CAN BE TERMICIDE.
11. BORA-CARE TO BE APPLIED ON INTERIOR WALLS IAW MANUFACTURER'S INSTRUCTIONS AND SPECIFICATIONS, PURSUANT TO CH.402 FLORDA BUILDING CODE.
12. TYP. TUB/SHWR. VALVE & DRAIN LOCATIONS

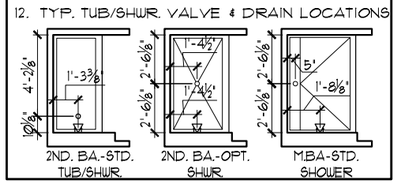

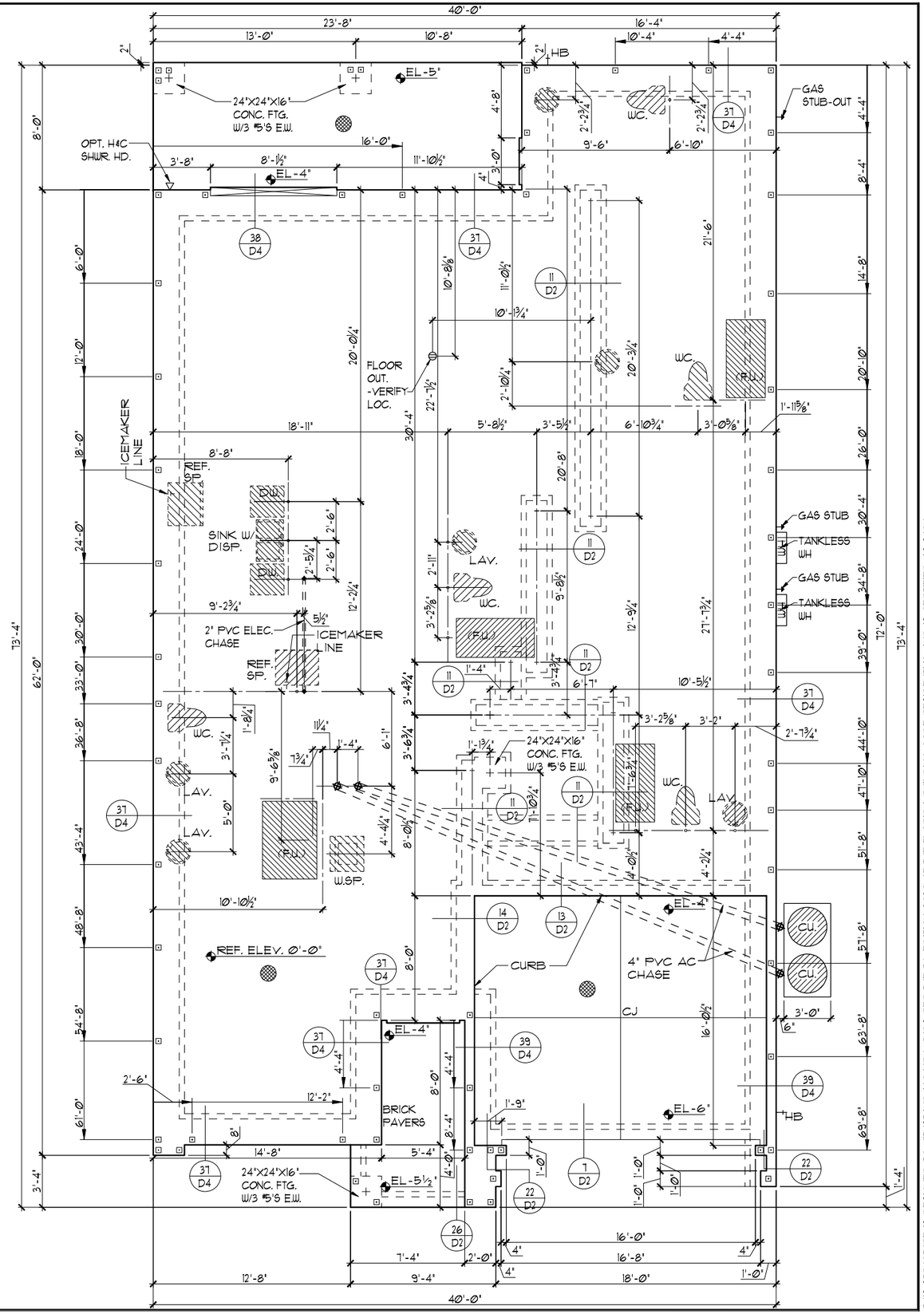

FOUNDATION PLAN "C"

1/8"=1'-0" (11X17) 1/4"=1'-0" (22X34)

THIS STRUCTURE IS DESIGNED TO WITHSTAND 140 MPH WINDS PER THE 7th EDITION, 2020 OF THE FLORIDA BUILDING CODE RESIDENTIAL AND IS CERTIFIED AS SUCH

LOT: 0000, PARADISO GRANDE

© COPYRIGHT 2015
Park Square Homes hereby reserves its common law copyrights and other copyrights in these plans, ideas, and design. These plans, ideas and designs are not to be copied or changed in any manner or form whatsoever, nor are they to be assigned to any third party without first obtaining the express written permission from Park Square Homes.

PARADISO GRANDE

REVISIONS	BY
06-25-21	DH

Engineering By:
DBE and C
MICHAEL A. THOMPSON
PE 47509
PHONE 407-721-2292

A DIVISION OF PARK SQUARE ENTERPRISES, INC.
5200 Vineland Road, Suite 200
Orlando, Florida 32811
Phone: (407) 529 - 3000

Park Square HOMES

FOUNDATION PLAN

SANDALWOOD
PARADISO GRANDE

4842

DATE	04-09-21
SCALE	AS NOTED
DRAWN	RDC
JOB	4842
SHEET	01C.0
OF	00 SHEETS

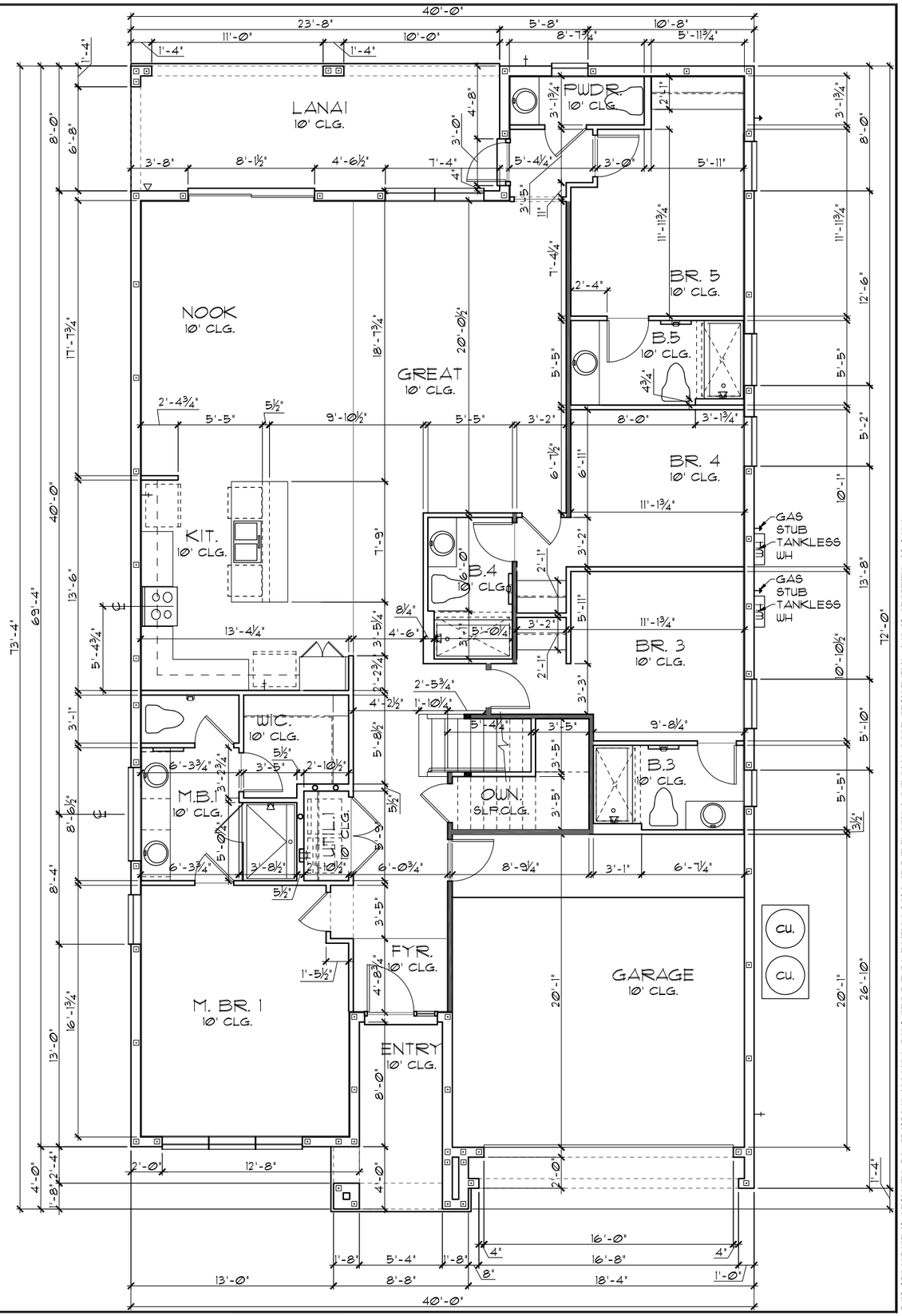

TABULATION (STD.)		
UPPER LIVING	2,694	SF.
LOWER LIVING	2,148	SF.
TOTAL LIVING	4,842	SF.
GARAGE	407	SF.
ENTRY	113	SF.
LANAI	189	SF.
TOTAL UNDER ROOF	5,551	SF.

GENERAL NOTES

1. CONTRACTOR TO VERIFY ALL DIMENSIONS ON JOB SITE.
2. DO NOT SCALE PRINTS! CONSTRUCTION TO BE FROM CALCULATED DIMENSIONS ONLY. ANY DISCREPANCIES OR ERRORS TO BE REPORTED PROMPTLY TO SUPERVISOR FOR CLARIFICATION.
3. ALL INTERIOR FRAME WALL DIMENSIONS TO BE 3½" UNLESS NOTED OTHERWISE.
4. ALL EXTERIOR BLOCK WALL DIMENSIONS TO BE 7½" UNLESS NOTED OTHERWISE.
5. ALL INTERIOR CEILINGS AT 10'-0" UNLESS NOTED OTHERWISE.
6. MECHANICAL EQUIPMENT LOCATIONS WILL BE DETERMINED BY COMMUNITY AND COUNTY CODES.

FLOOR PLAN W/ DIMENSIONS "A"

1/8"=1'-0" (11X17) 1/4"=1'-0" (22X34)

THIS STRUCTURE IS DESIGNED TO WITHSTAND 140 MPH WINDS PER THE 7th EDITION, 2020 OF THE FLORIDA BUILDING CODE RESIDENTIAL AND IS CERTIFIED AS SUCH

LOT: 0000, PARADISO GRANDE

© COPYRIGHT 2015 Park Square Homes hereby reserves its common law copyrights and other copyrights in these plans, ideas, and design. These plans, ideas and designs are not to be copied or changed in any manner or form whatsoever, nor are they to be assigned to any third party without first obtaining the express written permission from Park Square Homes.

PARADISO GRANDE

REVISIONS	BY
06-25-21	DH

Engineering By:
DBE and C
MICHAEL A. THOMPSON
PE 47509
PHONE 407-721-2292

A DIVISION OF PARK SQUARE ENTERPRISES, INC.
5200 Vineland Road, Suite 200
Orlando, Florida 32811
Phone: (407) 529 - 3000

Park Square HOMES

FLOOR PLAN W/ DIMENSIONS

SANDALWOOD

PARADISO GRANDE

4842

DATE	04-09-21
SCALE	AS NOTED
DRAWN	RDC
JOB	4842
SHEET	02A.0
OF	00 SHEETS

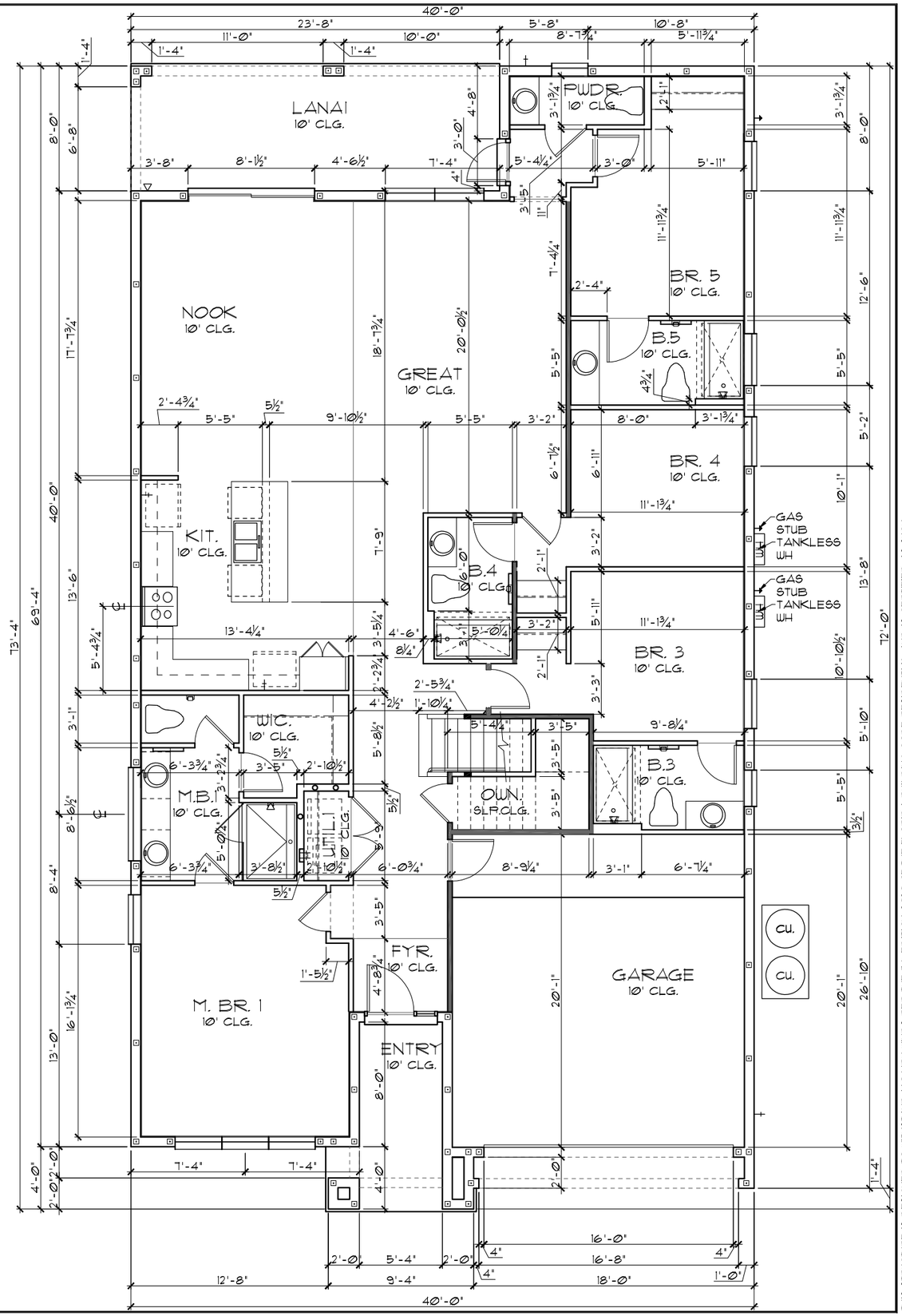

TABULATION (STD.)		
UPPER LIVING	2,694	SF.
LOWER LIVING	2,148	SF.
TOTAL LIVING	4,842	SF.
GARAGE	407	SF.
ENTRY	115	SF.
LANAI	189	SF.
TOTAL UNDER ROOF	5,553	SF.

GENERAL NOTES

1. CONTRACTOR TO VERIFY ALL DIMENSIONS ON JOB SITE.
2. DO NOT SCALE PRINTS! CONSTRUCTION TO BE FROM CALCULATED DIMENSIONS ONLY. ANY DISCREPANCIES OR ERRORS TO BE REPORTED PROMPTLY TO SUPERVISOR FOR CLARIFICATION.
3. ALL INTERIOR FRAME WALL DIMENSIONS TO BE 3½" UNLESS NOTED OTHERWISE.
4. ALL EXTERIOR BLOCK WALL DIMENSIONS TO BE 7½" UNLESS NOTED OTHERWISE.
5. ALL INTERIOR CEILINGS AT **10'-0"** UNLESS NOTED OTHERWISE.
6. MECHANICAL EQUIPMENT LOCATIONS WILL BE DETERMINED BY COMMUNITY AND COUNTY CODES.

FLOOR PLAN W/ DIMENSIONS "B"

1/8"=1'-0" (11X17) 1/4"=1'-0" (22X34)

THIS STRUCTURE IS DESIGNED TO WITHSTAND 140 MPH WINDS PER THE 7th EDITION, 2020 OF THE FLORIDA BUILDING CODE RESIDENTIAL AND IS CERTIFIED AS SUCH

LOT: 0000, PARADISO GRANDE

© COPYRIGHT 2015 Park Square Homes hereby reserves its common law copyrights and other copyrights in these plans, ideas, and design. These plans, ideas and designs are not to be copied or changed in any manner or form whatsoever, nor are they to be assigned to any third party without first obtaining the express written permission from Park Square Homes.

PARADISO GRANDE

REVISIONS	BY
06-25-21	DH

Engineering By:
DBE and C
MICHAEL A. THOMPSON
PE 47509
PHONE 407-721-2292

A DIVISION OF PARK SQUARE ENTERPRISES, INC.
5200 Vineland Road, Suite 200
Orlando, Florida 32811
Phone: (407) 529 - 3000

Park Square HOMES

FLOOR PLAN W/ DIMENSIONS

SANDALWOOD

PARADISO GRANDE

4842

DATE	04-09-21
SCALE	AS NOTED
DRAWN	RDC
JOB	4842
SHEET	02B.0
OF	00 SHEETS

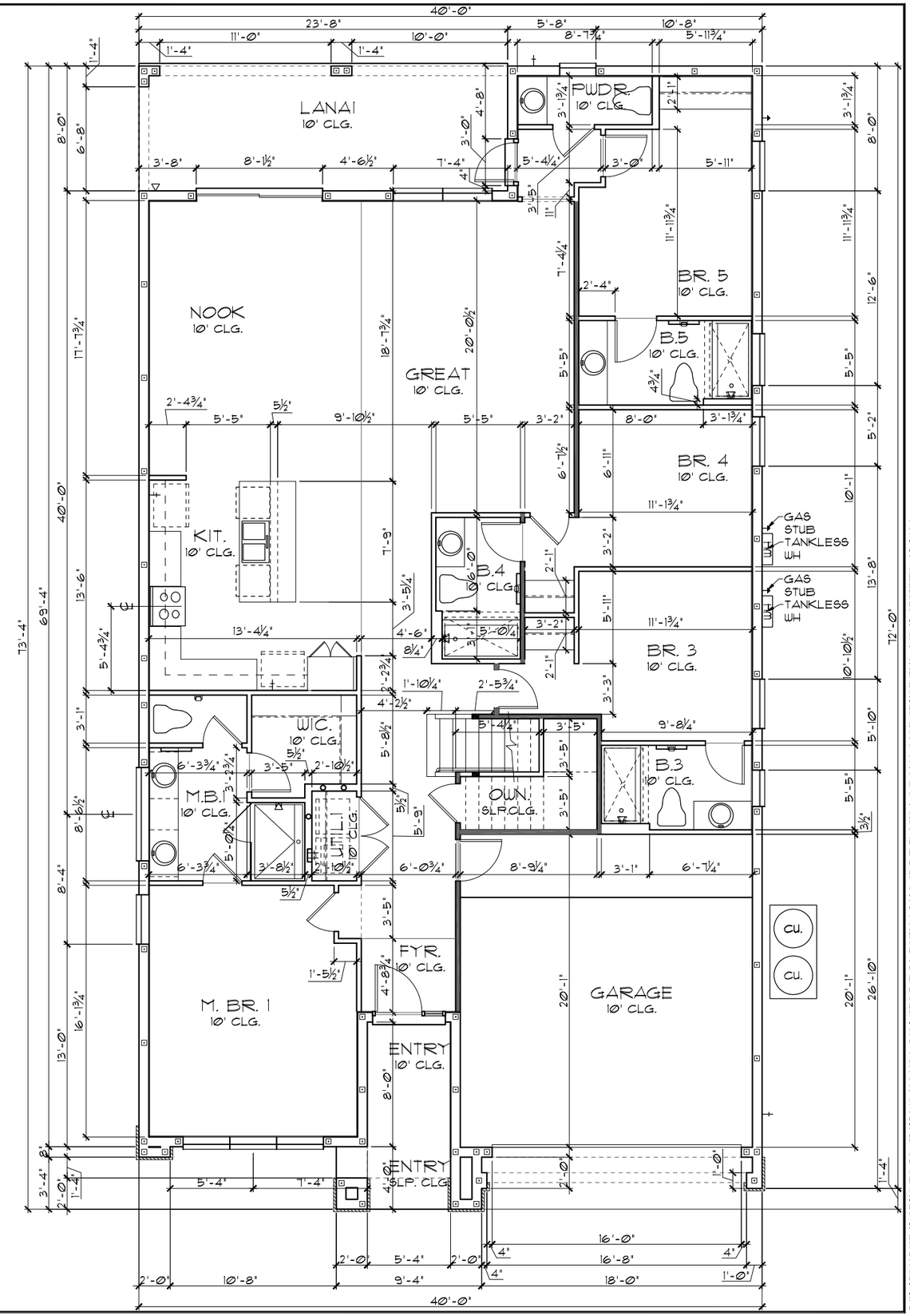

TABULATION (STD.)		
UPPER LIVING	2,694	SF.
LOWER LIVING	2,148	SF.
TOTAL LIVING	4,842	SF.
GARAGE	407	SF.
ENTRY	115	SF.
LANAI	189	SF.
TOTAL UNDER ROOF	5,553	SF.

GENERAL NOTES

1. CONTRACTOR TO VERIFY ALL DIMENSIONS ON JOB SITE.
2. DO NOT SCALE PRINTS! CONSTRUCTION TO BE FROM CALCULATED DIMENSIONS ONLY. ANY DISCREPANCIES OR ERRORS TO BE REPORTED PROMPTLY TO SUPERVISOR FOR CLARIFICATION.
3. ALL INTERIOR FRAME WALL DIMENSIONS TO BE 3½" UNLESS NOTED OTHERWISE.
4. ALL EXTERIOR BLOCK WALL DIMENSIONS TO BE 7½" UNLESS NOTED OTHERWISE.
5. ALL INTERIOR CEILINGS AT **10'-0"** UNLESS NOTED OTHERWISE.
6. MECHANICAL EQUIPMENT LOCATIONS WILL BE DETERMINED BY COMMUNITY AND COUNTY CODES.

FLOOR PLAN W/ DIMENSIONS "C"

1/8"=1'-0" (11X17) 1/4"=1'-0" (22X34)

THIS STRUCTURE IS DESIGNED TO WITHSTAND 140 MPH WINDS PER THE 7th EDITION, 2020 OF THE FLORIDA BUILDING CODE RESIDENTIAL AND IS CERTIFIED AS SUCH

LOT: 0000, PARADISO GRANDE

© COPYRIGHT 2015 Park Square Homes hereby reserves its common law copyrights and other copyrights in these plans, ideas, and design. These plans, ideas and designs are not to be copied or changed in any manner or form whatsoever, nor are they to be assigned to any third party without first obtaining the express written permission from Park Square Homes.

PARADISO GRANDE

REVISIONS	BY
06-25-21	DH

Engineering By:
DBE and C
MICHAEL A. THOMPSON
PE 47509
PHONE 407-721-2292

A DIVISION OF PARK SQUARE ENTERPRISES, INC.
5200 Vineland Road, Suite 200
Orlando, Florida 32811
Phone: (407) 529 - 3000

Park Square HOMES

FLOOR PLAN W/ DIMENSIONS

SANDALWOOD

PARADISO GRANDE

4842

DATE	04-09-21
SCALE	AS NOTED
DRAWN	RDC
JOB	4842
SHEET	02C.0
OF	00 SHEETS

LOAD INFORMATION

PER 7TH EDITION, 2020 FLORIDA BUILDING RESIDENTIAL CODE

DEAD LOADS

FLOOR:	STRUCTURE	7 PSF
	CEILINGS	3 PSF
	MECH/ELEC	5 PSF
	PARTITIONS	5 PSF
	TOTAL	20 PSF
ROOF:	SHEATHING	5 PSF
	STRUCTURE	7 PSF
	CEILINGS	3 PSF
	MECH/ELEC	5 PSF
	TOTAL	20 PSF

FLOOR LIVE LOADS

RESIDENTIAL FLOOR:	40 PSF
UNINHABITABLE ATTIC WITHOUT STORAGE:	10 PSF
UNINHABITABLE ATTIC W/LIMITED STORAGE:	20 PSF
ROOMS OTHER THAN SLEEPING ROOM:	40 PSF
SLEEPING ROOM:	30 PSF
STAIR LIVE LOAD:	40 PSF
BALCONIES:	40 PSF
PASSANGER VEHICLE GARAGE:	50 PSF

ROOF LIVE LOADS

MINIMUM ROOF LIVE LOAD (PSF)
TRIBUTARY LOADED AREA (SQ. FT.)
FOR ANY STRUCTURAL MEMBER

ROOF SLOPE	0-200	201-600	OVER 600
0:12 < 4:12	20	16	12
≥ 4:12 < 12:12	16	14	12
≥ 12:12	12	12	12

WIND INFORMATION

PER 7TH EDITION, 2020 FLORIDA BUILDING RESIDENTIAL CODE

1. BASIC WIND SPEED: 140 MPH
2. RISK CATEGORY II
3. WIND EXPOSURE: B
4. BUILDING TYPE: V B
5. ENCLOSURE CLASSIFICATION -- +/-.18, INCLUDED INTERNAL PRESSURE COEFFICIENT: IN NOTE #6
6. COMPONENT / CLADDING ----- SEE PLAN DESIGN WIND PRESSURE:

+	XXX
-	XXX

DESIGN WIND PRESSURE IAW FLA RESIDENTIAL CODE, SECTION R301

NOTE: DESIGN PRESSURES BASED ON BASIC WIND SPEED AND NOT ULTIMATE WIND SPEED.

GENERAL NOTES

1. PROVIDE RECESS HOT & COLD WATER WITH DRAIN @ WASHER SPACE.
2. VENT DRYER THRU ROOF.
3. PROVIDE COLD WATER LINE FOR ICE MAKER LINE @ REF. SPACE.
4. DO NOT SCALE PRINTS! CONSTRUCTION TO BE FROM CALCULATED DIMENSIONS ONLY. ANY DISCREPANCIES OR ERRORS TO BE REPORTED PROMPTLY TO SUPERVISOR FOR CLARIFICATION.
5. MECHANICAL EQUIPMENT LOCATION TO BE DETERMINED BY COMMUNITY STANDARDS AND APPLICABLE COUNTY CODES.
6. DENOTES CONC. BLOCK WALL HGT. @ **10'-0" A.F.F.**

   DENOTES CONC. BLOCK WALL HGT. @ **11'-6" A.F.F.**
7. REFER TO TYPICAL DETAIL SHEET FOR EXTERIOR WALL FINISH SPECIFICATIONS
8. REFER TO DETAIL SHEETS FOR FLASHING REQUIREMENTS AT ALL WOOD TO MASONRY INTERFACES
9. ANCHOR THE CONDENSER UNIT TO SLAB PER CODE: M 1307.1 - M1307.2
10. ALL INTER. FIRST FLOOR CEILINGS AT **10'-0"** UNLESS NOTED OTHERWISE.

    ALL INTER. SECOND FLOOR CEILINGS AT **9'-0"** UNLESS NOTED OTHERWISE.

NOTE: DOOR FROM HOUSE TO GARAGE MUST BE SOLID WOOD DOORS NO LESS 1 3/8" IAW R302.5.1

EGRESS WINDOW SCHEDULE- R310.2.1- FBCR2020		
SH25	33 1/2" H. X 30" W.	MIN. NET CLEAR OPENING 5.7 SQFT

NOTE:

- ALL EMERGENCY ESCAPE WINDOW SILLS TO BE NOT MORE THAN 44"MIN. A.F.F.- R310.2 - FBCR (2020)
- WINDOWS SILLS LOCATED LESS THAN 24"ABOVE FINISH FLOOR AND GREATER THAN 72" FINISHED GRADE MUST COMPLY WITH FBCR 312.2

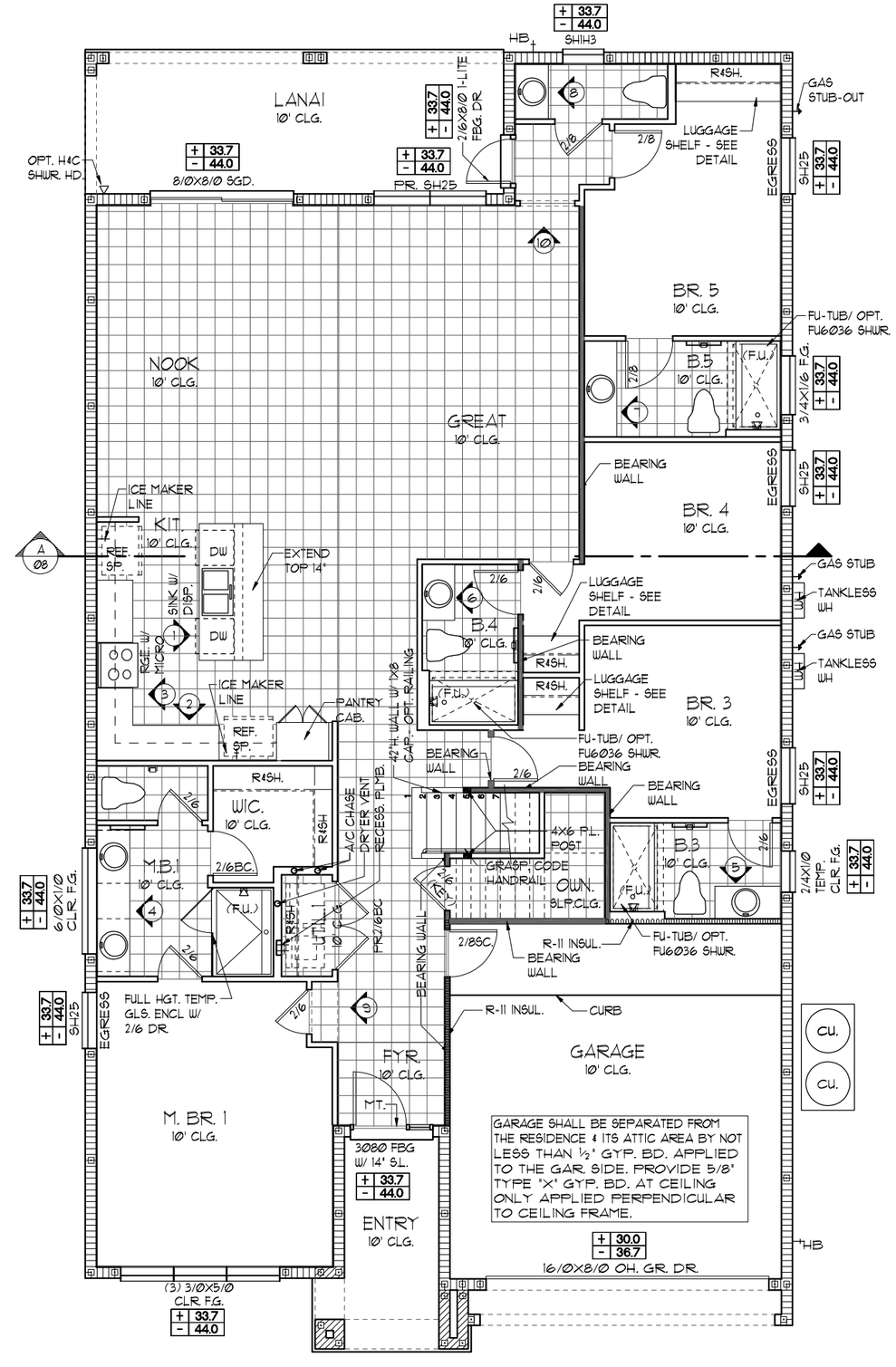

NOTE: ALL INTERIOR DOORS ON THIS FLOOR TO BE: **8'-0"** U.N.O. - VERIFY WITH COLOR SHEET.

FLOOR PLAN W/ NOTES "A"

1/8"=1'-0" (11X17) 1/4"=1'-0" (22X34)

THIS STRUCTURE IS DESIGNED TO WITHSTAND 140 MPH WINDS PER THE 7th EDITION, 2020 OF THE FLORIDA BUILDING CODE RESIDENTIAL AND IS CERTIFIED AS SUCH

LOT: 0000, PARADISO GRANDE

© COPYRIGHT 2015 Park Square Homes hereby reserves its common law copyrights and other copyrights in these plans, ideas, and design. These plans, ideas and designs are not to be copied or changed in any manner or form whatsoever, nor are they to be assigned to any third party without first obtaining the express written permission from Park Square Homes.

PARADISO GRANDE

REVISIONS	BY
06-25-21	DH

Engineering By:
DBE and C
MICHAEL A. THOMPSON
PE 47509
PHONE 407-721-2292

A DIVISION OF PARK SQUARE ENTERPRISES, INC.
5200 Vineland Road, Suite 200
Orlando, Florida 32811
Phone: (407) 529 - 3000

Park Square HOMES

FLOOR PLAN W/ NOTES

SANDALWOOD

PARADISO GRANDE

4842

DATE	04-09-21
SCALE	AS NOTED
DRAWN	RDC
JOB	4842
SHEET	03A.0
OF	00 SHEETS

LOAD INFORMATION

PER 7TH EDITION, 2020 FLORIDA BUILDING RESIDENTIAL CODE

DEAD LOADS

FLOOR:	STRUCTURE	7 PSF
	CEILINGS	3 PSF
	MECH/ELEC	5 PSF
	PARTITIONS	5 PSF
	TOTAL	20 PSF
ROOF:	SHEATHING	5 PSF
	STRUCTURE	7 PSF
	CEILINGS	3 PSF
	MECH/ELEC	5 PSF
	TOTAL	20 PSF

FLOOR LIVE LOADS

RESIDENTIAL FLOOR:	40 PSF
UNINHABITABLE ATTIC WITHOUT STORAGE:	10 PSF
UNINHABITABLE ATTIC W/LIMITED STORAGE:	20 PSF
ROOMS OTHER THAN SLEEPING ROOM:	40 PSF
SLEEPING ROOM:	30 PSF
STAIR LIVE LOAD:	40 PSF
BALCONIES:	40 PSF
PASSANGER VEHICLE GARAGE:	50 PSF

ROOF LIVE LOADS

MINIMUM ROOF LIVE LOAD (PSF)
TRIBUTARY LOADED AREA (SQ. FT.)
FOR ANY STRUCTURAL MEMBER

ROOF SLOPE	0-200	201-600	OVER 600
0:12 < 4:12	20	16	12
≥ 4:12 < 12:12	16	14	12
≥ 12:12	12	12	12

WIND INFORMATION

PER 7TH EDITION, 2020 FLORIDA BUILDING RESIDENTIAL CODE

1. BASIC WIND SPEED: 140 MPH
2. RISK CATEGORY II
3. WIND EXPOSURE: B
4. BUILDING TYPE: V B
5. ENCLOSURE CLASSIFICATION INTERNAL PRESSURE COEFFICIENT: +/-.18, INCLUDED IN NOTE #6
6. COMPONENT / CLADDING DESIGN WIND PRESSURE: SEE PLAN
   + XXX / - XXX DESIGN WIND PRESSURE IAW FLA RESIDENTIAL CODE, SECTION R301
   NOTE: DESIGN PRESSURES BASED ON BASIC WIND SPEED AND NOT ULTIMATE WIND SPEED.

GENERAL NOTES

1. PROVIDE RECESS HOT & COLD WATER WITH DRAIN @ WASHER SPACE.
2. VENT DRYER THRU ROOF.
3. PROVIDE COLD WATER LINE FOR ICE MAKER LINE @ REF. SPACE.
4. DO NOT SCALE PRINTS! CONSTRUCTION TO BE FROM CALCULATED DIMENSIONS ONLY. ANY DISCREPANCIES OR ERRORS TO BE REPORTED PROMPTLY TO SUPERVISOR FOR CLARIFICATION.
5. MECHANICAL EQUIPMENT LOCATION TO BE DETERMINED BY COMMUNITY STANDARDS AND APPLICABLE COUNTY CODES.
6. DENOTES CONC. BLOCK WALL HGT. @ 10'-0" A.F.F.
   DENOTES CONC. BLOCK WALL HGT. @ N/A
7. REFER TO TYPICAL DETAIL SHEET FOR EXTERIOR WALL FINISH SPECIFICATIONS
8. REFER TO DETAIL SHEETS FOR FLASHING REQUIREMENTS AT ALL WOOD TO MASONRY INTERFACES
9. ANCHOR THE CONDENSER UNIT TO SLAB PER CODE: M 1307.1 - M1307.2
10. ALL INTER. FIRST FLOOR CEILINGS AT 10'-0" UNLESS NOTED OTHERWISE.
    ALL INTER. SECOND FLOOR CEILINGS AT 9'-0" UNLESS NOTED OTHERWISE.

NOTE: DOOR FROM HOUSE TO GARAGE MUST BE SOLID WOOD DOORS NO LESS 1 3/8" IAW R302.5.1

EGRESS WINDOW SCHEDULE- R310.2.1- FBCR2020		
SH25	33 1/2" H. X 30" W.	MIN. NET CLEAR OPENING 5.7 SQFT

NOTE:
- ALL EMERGENCY ESCAPE WINDOW SILLS TO BE NOT MORE THAN 44"MIN. A.F.F.- R310.2 - FBCR (2020)
- WINDOWS SILLS LOCATED LESS THAN 24"ABOVE FINISH FLOOR AND GREATER THAN 72" FINISHED GRADE MUST COMPLY WITH FBCR 312.2

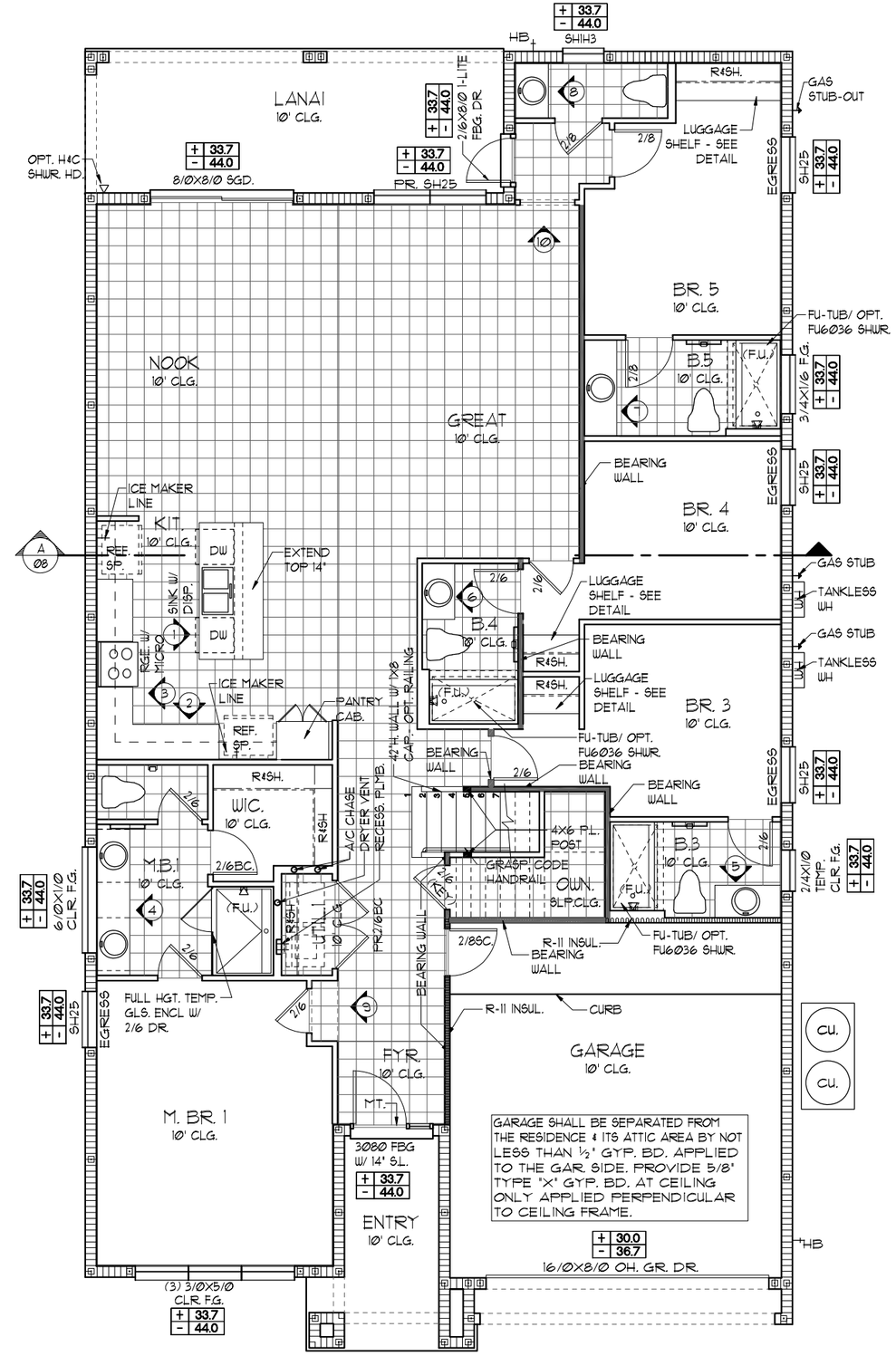

GARAGE SHALL BE SEPARATED FROM THE RESIDENCE & ITS ATTIC AREA BY NOT LESS THAN ½" GYP. BD. APPLIED TO THE GAR. SIDE. PROVIDE 5/8" TYPE "X" GYP. BD. AT CEILING ONLY APPLIED PERPENDICULAR TO CEILING FRAME.

NOTE: ALL INTERIOR DOORS ON THIS FLOOR TO BE: 8'-0" U.N.O. - VERIFY WITH COLOR SHEET.

FLOOR PLAN W/ NOTES "B"

1/8"=1'-0" (11X17) 1/4"=1'-0" (22X34)

THIS STRUCTURE IS DESIGNED TO WITHSTAND 140 MPH WINDS PER THE 7th EDITION, 2020 OF THE FLORIDA BUILDING CODE RESIDENTIAL AND IS CERTIFIED AS SUCH

LOT: 0000, PARADISO GRANDE

© COPYRIGHT 2015 Park Square Homes hereby reserves its common law copyrights and other copyrights in these plans, ideas, and design. These plans, ideas and designs are not, to be copied or changed in any manner or form whatsoever, nor are they to be assigned to any third party without first obtaining the express written permission from Park Square Homes.

PARADISO GRANDE

REVISIONS	BY
06-25-21	DH

Engineering By:
DBE and C
MICHAEL A. THOMPSON
PE 47509
PHONE 407-721-2292

A DIVISION OF PARK SQUARE ENTERPRISES, INC.
5200 Vineland Road, Suite 200
Orlando, Florida 32811
Phone: (407) 529 - 3000

Park Square HOMES

FLOOR PLAN W/ NOTES

SANDALWOOD
PARADISO GRANDE

4842

DATE	04-09-21
SCALE	AS NOTED
DRAWN	RDC
JOB	4842
SHEET	03B.0
OF	00 SHEETS

LOAD INFORMATION

PER 7TH EDITION, 2020 FLORIDA BUILDING RESIDENTIAL CODE

DEAD LOADS

FLOOR:	STRUCTURE	7 PSF
	CEILINGS	3 PSF
	MECH/ELEC	5 PSF
	PARTITIONS	5 PSF
	TOTAL	20 PSF
ROOF:	SHEATHING	5 PSF
	STRUCTURE	7 PSF
	CEILINGS	3 PSF
	MECH/ELEC	5 PSF
	TOTAL	20 PSF

FLOOR LIVE LOADS

RESIDENTIAL FLOOR:	40 PSF
UNINHABITABLE ATTIC WITHOUT STORAGE:	10 PSF
UNINHABITABLE ATTIC W/LIMITED STORAGE:	20 PSF
ROOMS OTHER THAN SLEEPING ROOM:	40 PSF
SLEEPING ROOM:	30 PSF
STAIR LIVE LOAD:	40 PSF
BALCONIES:	40 PSF
PASSANGER VEHICLE GARAGE:	50 PSF

ROOF LIVE LOADS

MINIMUM ROOF LIVE LOAD (PSF)
TRIBUTARY LOADED AREA (SQ. FT.)
FOR ANY STRUCTURAL MEMBER

ROOF SLOPE	0-200	201-600	OVER 600
0:12 < 4:12	20	16	12
≥ 4:12 < 12:12	16	14	12
≥ 12:12	12	12	12

WIND INFORMATION

PER 7TH EDITION, 2020 FLORIDA BUILDING RESIDENTIAL CODE

1. BASIC WIND SPEED: 140 MPH
2. RISK CATEGORY II
3. WIND EXPOSURE: B
4. BUILDING TYPE: V B
5. ENCLOSURE CLASSIFICATION -- +/-.18, INCLUDED INTERNAL PRESSURE COEFFICIENT: IN NOTE #6
6. COMPONENT / CLADDING ----- SEE PLAN DESIGN WIND PRESSURE:

+ XXX	DESIGN WIND PRESSURE IAW FLA
- XXX	RESIDENTIAL CODE, SECTION R301

NOTE: DESIGN PRESSURES BASED ON BASIC WIND SPEED AND NOT ULTIMATE WIND SPEED.

GENERAL NOTES

1. PROVIDE RECESS HOT & COLD WATER WITH DRAIN @ WASHER SPACE.
2. VENT DRYER THRU ROOF.
3. PROVIDE COLD WATER LINE FOR ICE MAKER LINE @ REF. SPACE.
4. DO NOT SCALE PRINTS! CONSTRUCTION TO BE FROM CALCULATED DIMENSIONS ONLY. ANY DISCREPANCIES OR ERRORS TO BE REPORTED PROMPTLY TO SUPERVISOR FOR CLARIFICATION.
5. MECHANICAL EQUIPMENT LOCATION TO BE DETERMINED BY COMMUNITY STANDARDS AND APPLICABLE COUNTY CODES.
6. DENOTES CONC. BLOCK WALL HGT. @ 10'-0" A.F.F.
   DENOTES CONC. BLOCK WALL HGT. @ N/A
7. REFER TO TYPICAL DETAIL SHEET FOR EXTERIOR WALL FINISH SPECIFICATIONS
8. REFER TO DETAIL SHEETS FOR FLASHING REQUIREMENTS AT ALL WOOD TO MASONRY INTERFACES
9. ANCHOR THE CONDENSER UNIT TO SLAB PER CODE: M 1307.1 - M1307.2
10. ALL INTER. FIRST FLOOR CEILINGS AT 10'-0" UNLESS NOTED OTHERWISE.
    ALL INTER. SECOND FLOOR CEILINGS AT 9'-0" UNLESS NOTED OTHERWISE.

NOTE: DOOR FROM HOUSE TO GARAGE MUST BE SOLID WOOD DOORS NO LESS 1 3/8" IAW R302.5.1

EGRESS WINDOW SCHEDULE- R310.2.1- FBCR2020		
SH25	33 1/2" H. X 30" W.	MIN. NET CLEAR OPENING 5.7 SQFT

NOTE:

- ALL EMERGENCY ESCAPE WINDOW SILLS TO BE NOT MORE THAN 44"MIN. A.F.F.- R310.2 - FBCR (2020)
- WINDOWS SILLS LOCATED LESS THAN 24"ABOVE FINISH FLOOR AND GREATER THAN 72" FINISHED GRADE MUST COMPLY WITH FBCR 312.2

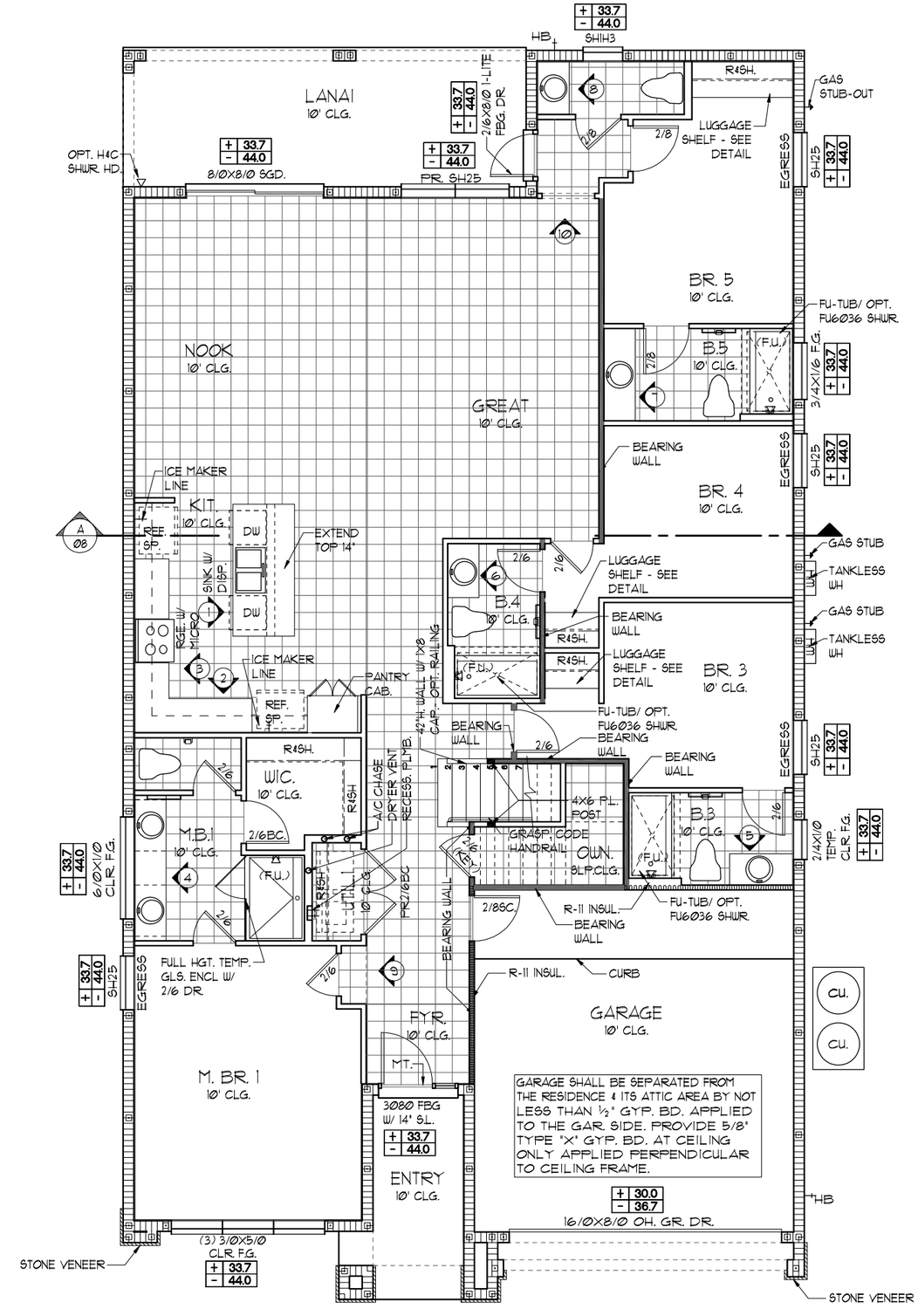

NOTE: ALL INTERIOR DOORS ON THIS FLOOR TO BE: 8'-0" U.N.O. - VERIFY WITH COLOR SHEET.

FLOOR PLAN W/ NOTES "C"

1/8"=1'-0" (11X17) 1/4"=1'-0" (22X34)

REVISIONS	BY
06-25-21	DH

Engineering By:
DBE and C
MICHAEL A. THOMPSON
PE 47509
PHONE 407-721-2292

A DIVISION OF PARK SQUARE ENTERPRISES, INC.
5200 Vineland Road, Suite 200
Orlando, Florida 32811
Phone: (407) 529 - 3000

Park Square HOMES

PARADISO GRANDE

FLOOR PLAN W/ NOTES

SANDALWOOD

PARADISO GRANDE

4842

DATE 04-09-21

SCALE AS NOTED

DRAWN RDC

JOB 4842

SHEET 03C.0 OF 00 SHEETS

LOT: 0000, PARADISO GRANDE

THIS STRUCTURE IS DESIGNED TO WITHSTAND 140 MPH WINDS PER THE 7th EDITION, 2020 OF THE FLORIDA BUILDING CODE RESIDENTIAL AND IS CERTIFIED AS SUCH

© COPYRIGHT 2015 Park Square Homes hereby reserves its common law copyrights and other copyrights in these plans, ideas, and design. These plans, ideas and designs are not to be copied or changed in any manner or form whatsoever, nor are they to be assigned to any third party without first obtaining the express written permission from Park Square Homes.

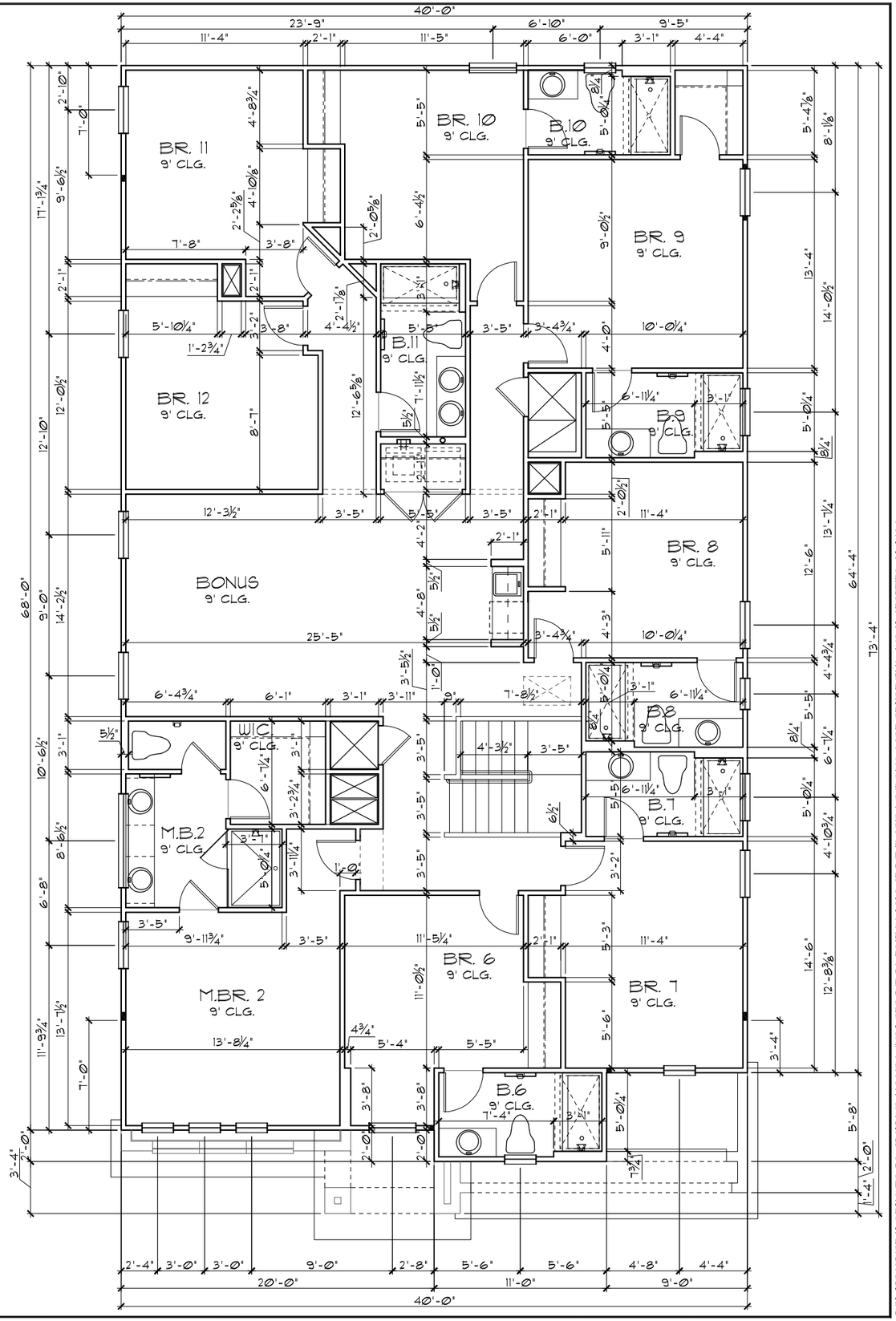

GENERAL NOTES

1. CONTRACTOR TO VERIFY ALL DIMENSIONS ON JOB SITE.
2. DO NOT SCALE PRINTS! CONSTRUCTION TO BE FROM CALCULATED DIMENSIONS ONLY. ANY DISCREPANCIES OR ERRORS TO BE REPORTED PROMPTLY TO SUPERVISOR FOR CLARIFICATION.
3. ALL INTERIOR FRAME WALL DIMENSIONS TO BE 3½" UNLESS NOTED OTHERWISE.
4. ALL EXTERIOR BLOCK WALL DIMENSIONS TO BE 7½" UNLESS NOTED OTHERWISE.
5. ALL INTERIOR CEILINGS AT **9'-0"** UNLESS NOTED OTHERWISE.
6. MECHANICAL EQUIPMENT LOCATIONS WILL BE DETERMINED BY COMMUNITY AND COUNTY CODES.

UPPER FLOOR PLAN W/ DIMENSIONS "A"

1/8"=1'-0" (11X17) 1/4"=1'-0" (22X34)

THIS STRUCTURE IS DESIGNED TO WITHSTAND 140 MPH WINDS PER THE 7th EDITION, 2020 OF THE FLORIDA BUILDING CODE RESIDENTIAL AND IS CERTIFIED AS SUCH

LOT: 0000, PARADISO GRANDE

© COPYRIGHT 2015
Park Square Homes hereby reserves its common law copyrights and other copyrights in these plans, ideas, and design. These plans, ideas and designs are not to be copied or changed in any manner or form whatsoever, nor are they to be assigned to any third party without first obtaining the express written permission from Park Square Homes.

PARADISO GRANDE

REVISIONS	BY
06-25-21	DH

Engineering By:
DBE and C
MICHAEL A. THOMPSON
PE 47509
PHONE 407-721-2292

Park Square HOMES
A DIVISION OF PARK SQUARE ENTERPRISES, INC.
5200 Vineland Road, Suite 200
Orlando, Florida 32811
Phone: (407) 529 - 3000

UPPER FLOOR PLAN W/ DIMENSIONS

SANDALWOOD
PARADISO GRANDE

4842

DATE	04-09-21
SCALE	AS NOTED
DRAWN	RDC
JOB	4842
SHEET	04A.0
OF	00 SHEETS

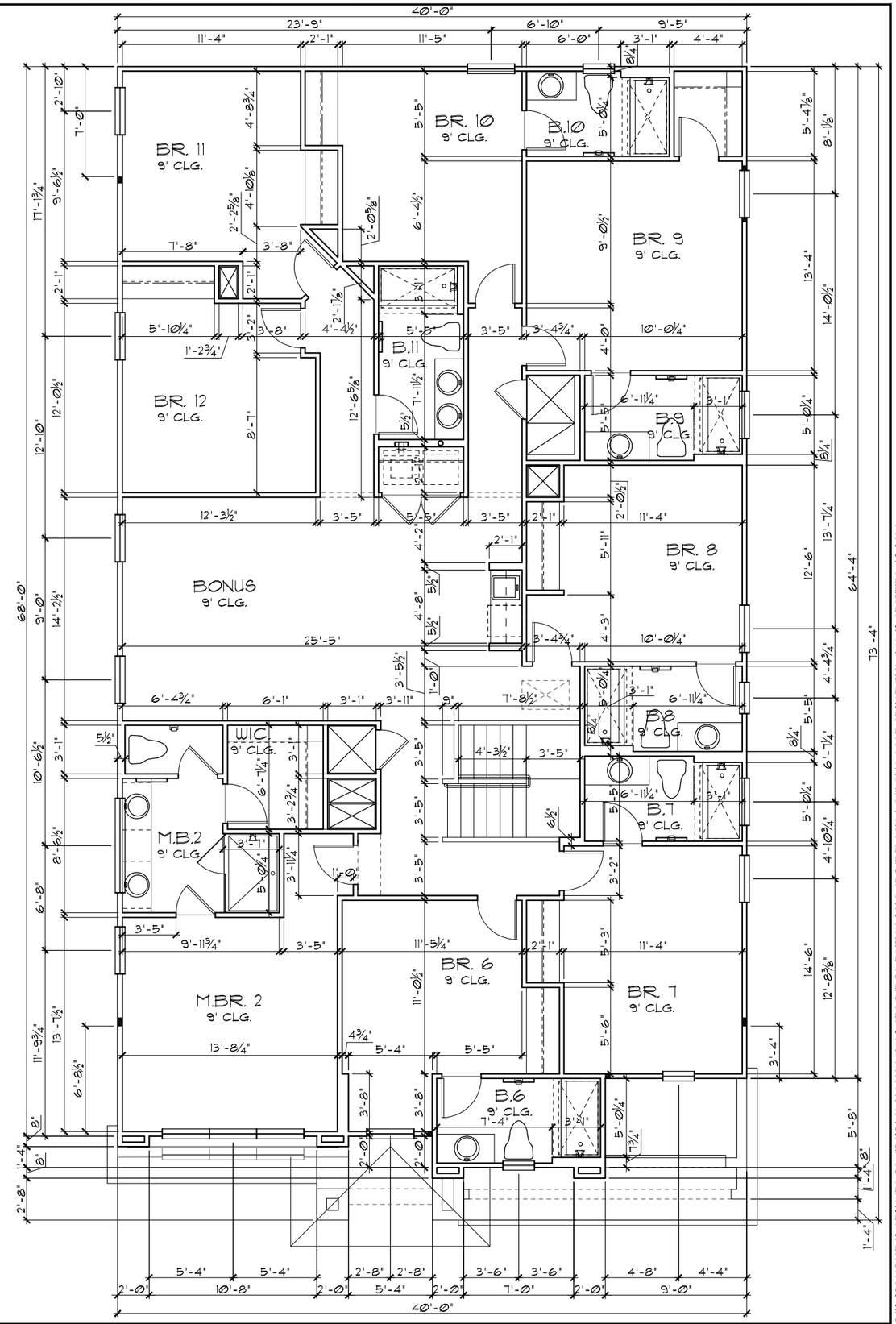

GENERAL NOTES

1. CONTRACTOR TO VERIFY ALL DIMENSIONS ON JOB SITE.
2. DO NOT SCALE PRINTS! CONSTRUCTION TO BE FROM CALCULATED DIMENSIONS ONLY. ANY DISCREPANCIES OR ERRORS TO BE REPORTED PROMPTLY TO SUPERVISOR FOR CLARIFICATION.
3. ALL INTERIOR FRAME WALL DIMENSIONS TO BE 3½" UNLESS NOTED OTHERWISE.
4. ALL EXTERIOR BLOCK WALL DIMENSIONS TO BE 7½" UNLESS NOTED OTHERWISE.
5. ALL INTERIOR CEILINGS AT **9'-0"** UNLESS NOTED OTHERWISE.
6. MECHANICAL EQUIPMENT LOCATIONS WILL BE DETERMINED BY COMMUNITY AND COUNTY CODES.

UPPER FLOOR PLAN W/ DIMENSIONS "B"

1/8"=1'-0" (11X17) 1/4"=1'-0" (22X34)

THIS STRUCTURE IS DESIGNED TO WITHSTAND 140 MPH WINDS PER THE 7th EDITION, 2020 OF THE FLORIDA BUILDING CODE RESIDENTIAL AND IS CERTIFIED AS SUCH

PARADISO GRANDE

LOT: 0000, PARADISO GRANDE

© COPYRIGHT 2015
Park Square Homes hereby reserves its common law copyrights and other copyrights in these plans, ideas, and design. These plans, ideas and designs are not to be copied or changed in any manner or form whatsoever, nor are they to be assigned to any third party without first obtaining the express written permission from Park Square Homes.

REVISIONS	BY
06-25-21	DH

Engineering By:
DBE and C
MICHAEL A. THOMPSON
PE 47509
PHONE 407-721-2292

Park Square HOMES
A DIVISION OF PARK SQUARE ENTERPRISES, INC.
5200 Vineland Road, Suite 200
Orlando, Florida 32811
Phone: (407) 529 - 3000

UPPER FLOOR PLAN W/ DIMENSIONS

SANDALWOOD
PARADISO GRANDE

4842

DATE	04-09-21
SCALE	AS NOTED
DRAWN	RDC
JOB	4842
SHEET	04B.0
OF	00 SHEETS

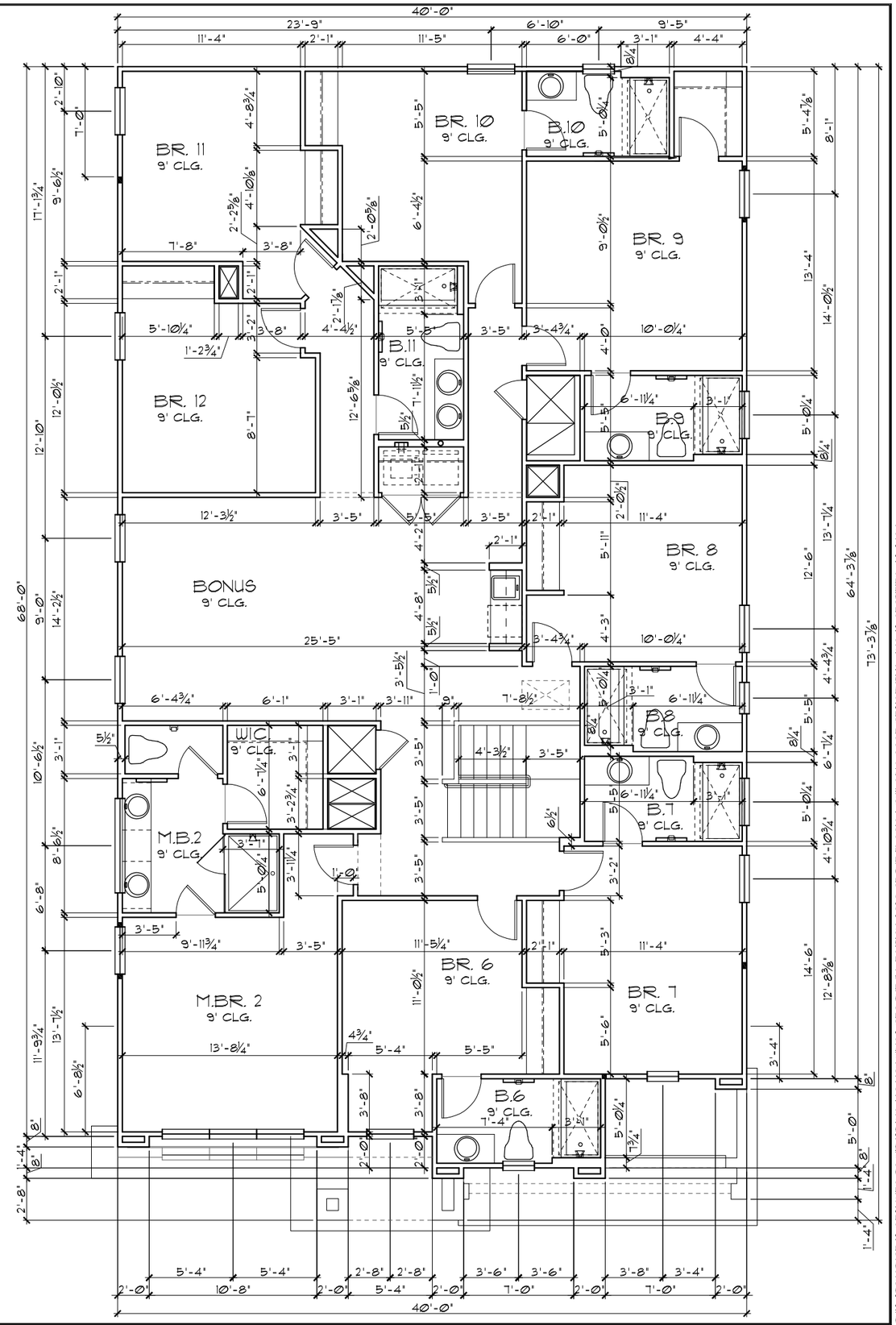

GENERAL NOTES

1. CONTRACTOR TO VERIFY ALL DIMENSIONS ON JOB SITE.
2. DO NOT SCALE PRINTS! CONSTRUCTION TO BE FROM CALCULATED DIMENSIONS ONLY. ANY DISCREPANCIES OR ERRORS TO BE REPORTED PROMPTLY TO SUPERVISOR FOR CLARIFICATION.
3. ALL INTERIOR FRAME WALL DIMENSIONS TO BE 3½" UNLESS NOTED OTHERWISE.
4. ALL EXTERIOR BLOCK WALL DIMENSIONS TO BE 7½" UNLESS NOTED OTHERWISE.
5. ALL INTERIOR CEILINGS AT **9'-0"** UNLESS NOTED OTHERWISE.
6. MECHANICAL EQUIPMENT LOCATIONS WILL BE DETERMINED BY COMMUNITY AND COUNTY CODES.

UPPER FLOOR PLAN W/ DIMENSIONS "C"

1/8"=1'-0" (11X17) 1/4"=1'-0" (22X34)

THIS STRUCTURE IS DESIGNED TO WITHSTAND 140 MPH WINDS PER THE 7th EDITION, 2020 OF THE FLORIDA BUILDING CODE RESIDENTIAL AND IS CERTIFIED AS SUCH

PARADISO GRANDE

LOT: 0000, PARADISO GRANDE

© COPYRIGHT 2015
Park Square Homes hereby reserves its common law copyrights and other copyrights in these plans, ideas, and design. These plans, ideas and designs are not to be copied or changed in any manner or form whatsoever, nor are they to be assigned to any third party without first obtaining the express written permission from Park Square Homes.

REVISIONS	BY
06-25-21	DH

Engineering By:
DBE and C
MICHAEL A. THOMPSON
PE 47509
PHONE 407-721-2292

Park Square HOMES
A DIVISION OF PARK SQUARE ENTERPRISES, INC.
5200 Vineland Road, Suite 200
Orlando, Florida 32811
Phone: (407) 529 - 3000

UPPER FLOOR PLAN W/ DIMENSIONS

SANDALWOOD
PARADISO GRANDE

4842

DATE	04-09-21
SCALE	AS NOTED
DRAWN	RDC
JOB	4842
SHEET	04C.0
OF	00 SHEETS

LOAD INFORMATION

PER 7TH EDITION, 2020 FLORIDA BUILDING RESIDENTIAL CODE

DEAD LOADS

FLOOR:	STRUCTURE	7 PSF
	CEILINGS	3 PSF
	MECH/ELEC	5 PSF
	PARTITIONS	5 PSF
	TOTAL	20 PSF
ROOF:	SHEATHING	5 PSF
	STRUCTURE	7 PSF
	CEILINGS	3 PSF
	MECH/ELEC	5 PSF
	TOTAL	20 PSF

FLOOR LIVE LOADS

RESIDENTIAL FLOOR:	40 PSF
UNINHABITABLE ATTIC WITHOUT STORAGE:	10 PSF
UNINHABITABLE ATTIC W/LIMITED STORAGE:	20 PSF
ROOMS OTHER THAN SLEEPING ROOM:	40 PSF
SLEEPING ROOM:	30 PSF
STAIR LIVE LOAD:	40 PSF
BALCONIES:	40 PSF
PASSANGER VEHICLE GARAGE:	50 PSF

ROOF LIVE LOADS

MINIMUM ROOF LIVE LOAD (PSF)
TRIBUTARY LOADED AREA (SQ. FT.)
FOR ANY STRUCTURAL MEMBER

ROOF SLOPE	0-200	201-600	OVER 600
0:12 < 4:12	20	16	12
≥ 4:12 < 12:12	16	14	12
≥ 12:12	12	12	12

WIND INFORMATION

PER 7TH EDITION, 2020 FLORIDA BUILDING RESIDENTIAL CODE

1. BASIC WIND SPEED: 140 MPH
2. RISK CATEGORY II
3. WIND EXPOSURE: B
4. BUILDING TYPE: V B
5. ENCLOSURE CLASSIFICATION +/-.18, INCLUDED INTERNAL PRESSURE COEFFICIENT: IN NOTE #6
6. COMPONENT / CLADDING SEE PLAN DESIGN WIND PRESSURE:

+	XXX
-	XXX

DESIGN WIND PRESSURE IAW FLA RESIDENTIAL CODE, SECTION R301

NOTE: DESIGN PRESSURES BASED ON BASIC WIND SPEED AND NOT ULTIMATE WIND SPEED.

GENERAL NOTES

1. PROVIDE RECESS HOT & COLD WATER WITH DRAIN @ WASHER SPACE.
2. VENT DRYER THRU ROOF.
3. PROVIDE COLD WATER LINE FOR ICE MAKER LINE @ REF. SPACE.
4. DO NOT SCALE PRINTS! CONSTRUCTION TO BE FROM CALCULATED DIMENSIONS ONLY. ANY DISCREPANCIES OR ERRORS TO BE REPORTED PROMPTLY TO SUPERVISOR FOR CLARIFICATION.
5. MECHANICAL EQUIPMENT LOCATION TO BE DETERMINED BY COMMUNITY STANDARDS AND APPLICABLE COUNTY CODES.
6. DENOTES CONC. BLOCK WALL HGT. @ N/A

   DENOTES CONC. BLOCK WALL HGT. @ N/A
7. REFER TO TYPICAL DETAIL SHEET FOR EXTERIOR WALL FINISH SPECIFICATIONS
8. REFER TO DETAIL SHEETS FOR FLASHING REQUIREMENTS AT ALL WOOD TO MASONRY INTERFACES
9. ANCHOR THE CONDENSER UNIT TO SLAB PER CODE: M 1307.1 - M1307.2
10. ALL INTER. FIRST FLOOR CEILINGS AT 10'-0" UNLESS NOTED OTHERWISE.

    ALL INTER. SECOND FLOOR CEILINGS AT 9'-0" UNLESS NOTED OTHERWISE.

EGRESS WINDOW SCHEDULE- R310.2.1- FBCR2020

SH25	33 1/2" H. X 30" W.	MIN. NET CLEAR OPENING 5.7 SQFT

NOTE:

- ALL EMERGENCY ESCAPE WINDOW SILLS TO BE NOT MORE THAN 44"MIN. A.F.F.- R310.2 - FBCR (2020)
- WINDOWS SILLS LOCATED LESS THAN 24"ABOVE FINISH FLOOR AND GREATER THAN 72" FINISHED GRADE MUST COMPLY WITH FBCR 312.2

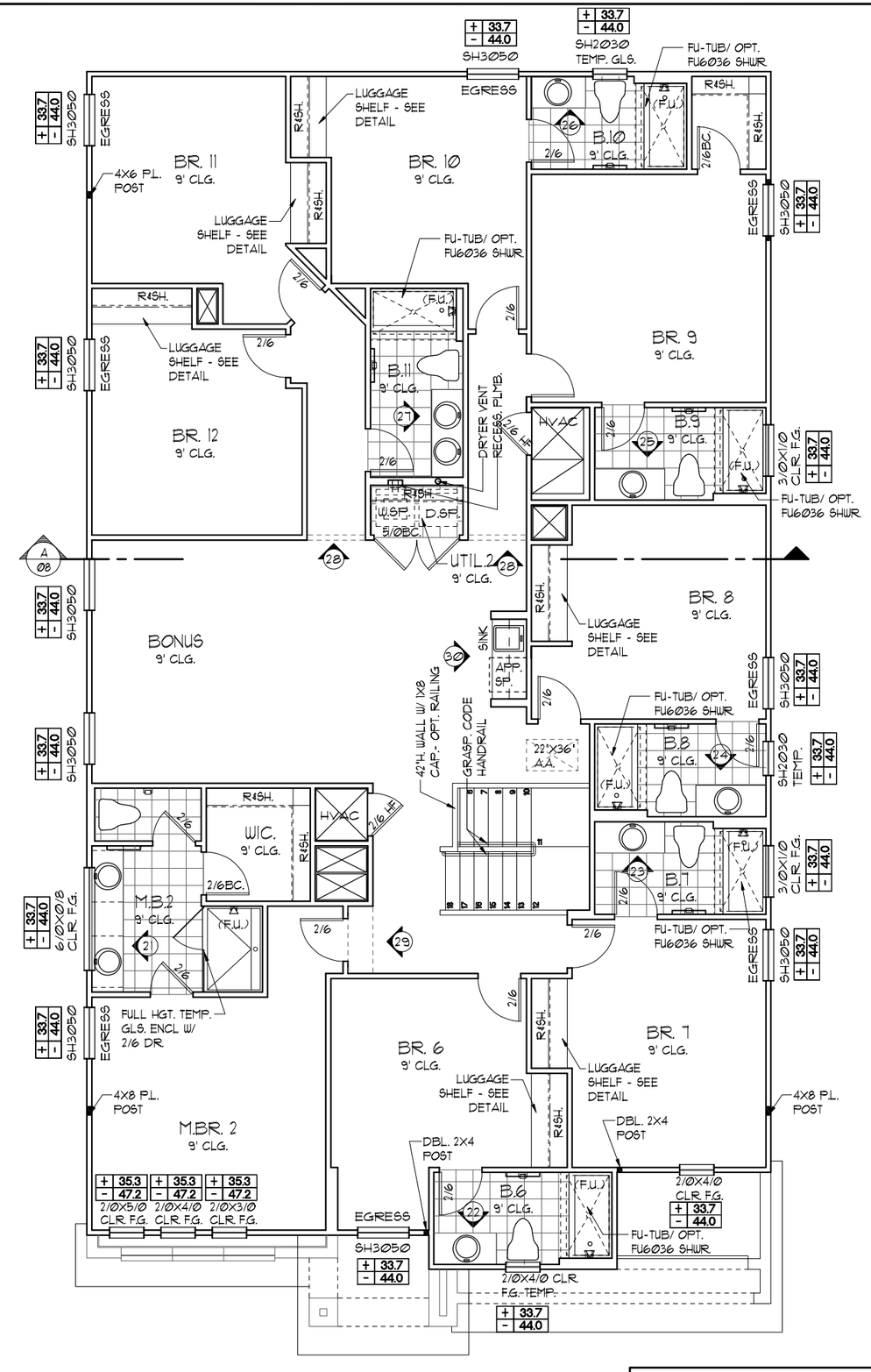

NOTE: ALL INTERIOR DOORS ON THIS FLOOR TO BE: 6'-8" U.N.O. - VERIFY WITH COLOR SHEET.

UPPER FLOOR PLAN NOTES "A"

1/8"=1'-0" (11X17) 1/4"=1'-0" (22X34)

THIS STRUCTURE IS DESIGNED TO WITHSTAND 140 MPH WINDS PER THE 7th EDITION, 2020 OF THE FLORIDA BUILDING CODE RESIDENTIAL AND IS CERTIFIED AS SUCH

LOT: 0000, PARADISO GRANDE

© COPYRIGHT 2015 Park Square Homes hereby reserves its common law copyrights and other copyrights in these plans, ideas, and design. These plans, ideas and designs are not to be copied or changed in any manner or form whatsoever, nor are they to be assigned to any third party without first obtaining the express written permission from Park Square Homes.

PARADISO GRANDE

REVISIONS	BY
06-25-21	DH

Engineering By:
DBE and C
MICHAEL A. THOMPSON
PE 47509
PHONE 407-721-2292

A DIVISION OF PARK SQUARE ENTERPRISES, INC.
5200 Vineland Road, Suite 200
Orlando, Florida 32811
Phone: (407) 529 - 3000

Park Square HOMES

FLOOR PLAN W/ NOTES

SANDALWOOD

PARADISO GRANDE

4842

DATE	04-09-21
SCALE	AS NOTED
DRAWN	RDC
JOB	4842
SHEET	05A.0
OF	00 SHEETS

LOAD INFORMATION

PER 7TH EDITION, 2020 FLORIDA BUILDING RESIDENTIAL CODE

DEAD LOADS

FLOOR:	STRUCTURE	7 PSF
	CEILINGS	3 PSF
	MECH/ELEC	5 PSF
	PARTITIONS	5 PSF
	TOTAL	20 PSF
ROOF:	SHEATHING	5 PSF
	STRUCTURE	7 PSF
	CEILINGS	3 PSF
	MECH/ELEC	5 PSF
	TOTAL	20 PSF

FLOOR LIVE LOADS

RESIDENTIAL FLOOR:	40 PSF
UNINHABITABLE ATTIC WITHOUT STORAGE:	10 PSF
UNINHABITABLE ATTIC W/LIMITED STORAGE:	20 PSF
ROOMS OTHER THAN SLEEPING ROOM:	40 PSF
SLEEPING ROOM:	30 PSF
STAIR LIVE LOAD:	40 PSF
BALCONIES:	40 PSF
PASSANGER VEHICLE GARAGE:	50 PSF

ROOF LIVE LOADS

MINIMUM ROOF LIVE LOAD (PSF)
TRIBUTARY LOADED AREA (SQ. FT.)
FOR ANY STRUCTURAL MEMBER

ROOF SLOPE	0-200	201-600	OVER 600
0:12 < 4:12	20	16	12
≥ 4:12 < 12:12	16	14	12
≥ 12:12	12	12	12

WIND INFORMATION

PER 7TH EDITION, 2020 FLORIDA BUILDING RESIDENTIAL CODE

1. BASIC WIND SPEED: 140 MPH
2. RISK CATEGORY II
3. WIND EXPOSURE: B
4. BUILDING TYPE: V B
5. ENCLOSURE CLASSIFICATION - INTERNAL PRESSURE COEFFICIENT: +/-.18, INCLUDED IN NOTE #6
6. COMPONENT / CLADDING - DESIGN WIND PRESSURE: SEE PLAN
   - + XXX / - XXX DESIGN WIND PRESSURE IAW FLA RESIDENTIAL CODE, SECTION R301
   - NOTE: DESIGN PRESSURES BASED ON BASIC WIND SPEED AND NOT ULTIMATE WIND SPEED.

GENERAL NOTES

1. PROVIDE RECESS HOT & COLD WATER WITH DRAIN @ WASHER SPACE.
2. VENT DRYER THRU ROOF.
3. PROVIDE COLD WATER LINE FOR ICE MAKER LINE @ REF. SPACE.
4. DO NOT SCALE PRINTS! CONSTRUCTION TO BE FROM CALCULATED DIMENSIONS ONLY. ANY DISCREPANCIES OR ERRORS TO BE REPORTED PROMPTLY TO SUPERVISOR FOR CLARIFICATION.
5. MECHANICAL EQUIPMENT LOCATION TO BE DETERMINED BY COMMUNITY STANDARDS AND APPLICABLE COUNTY CODES.
6. DENOTES CONC. BLOCK WALL HGT. @ N/A
   DENOTES CONC. BLOCK WALL HGT. @ N/A
7. REFER TO TYPICAL DETAIL SHEET FOR EXTERIOR WALL FINISH SPECIFICATIONS
8. REFER TO DETAIL SHEETS FOR FLASHING REQUIREMENTS AT ALL WOOD TO MASONRY INTERFACES
9. ANCHOR THE CONDENSER UNIT TO SLAB PER CODE: M 1307.1 - M1307.2
10. ALL INTER. FIRST FLOOR CEILINGS AT 10'-0" UNLESS NOTED OTHERWISE.
    ALL INTER. SECOND FLOOR CEILINGS AT 9'-0" UNLESS NOTED OTHERWISE.

EGRESS WINDOW SCHEDULE- R310.2.1- FBCR2020

SH25	33 1/2" H. X 30" W.	MIN. NET CLEAR OPENING 5.7 SQFT

NOTE:

- ALL EMERGENCY ESCAPE WINDOW SILLS TO BE NOT MORE THAN 44"MIN. A.F.F.- R310.2 - FBCR (2020)
- WINDOWS SILLS LOCATED LESS THAN 24"ABOVE FINISH FLOOR AND GREATER THAN 72" FINISHED GRADE MUST COMPLY WITH FBCR 312.2

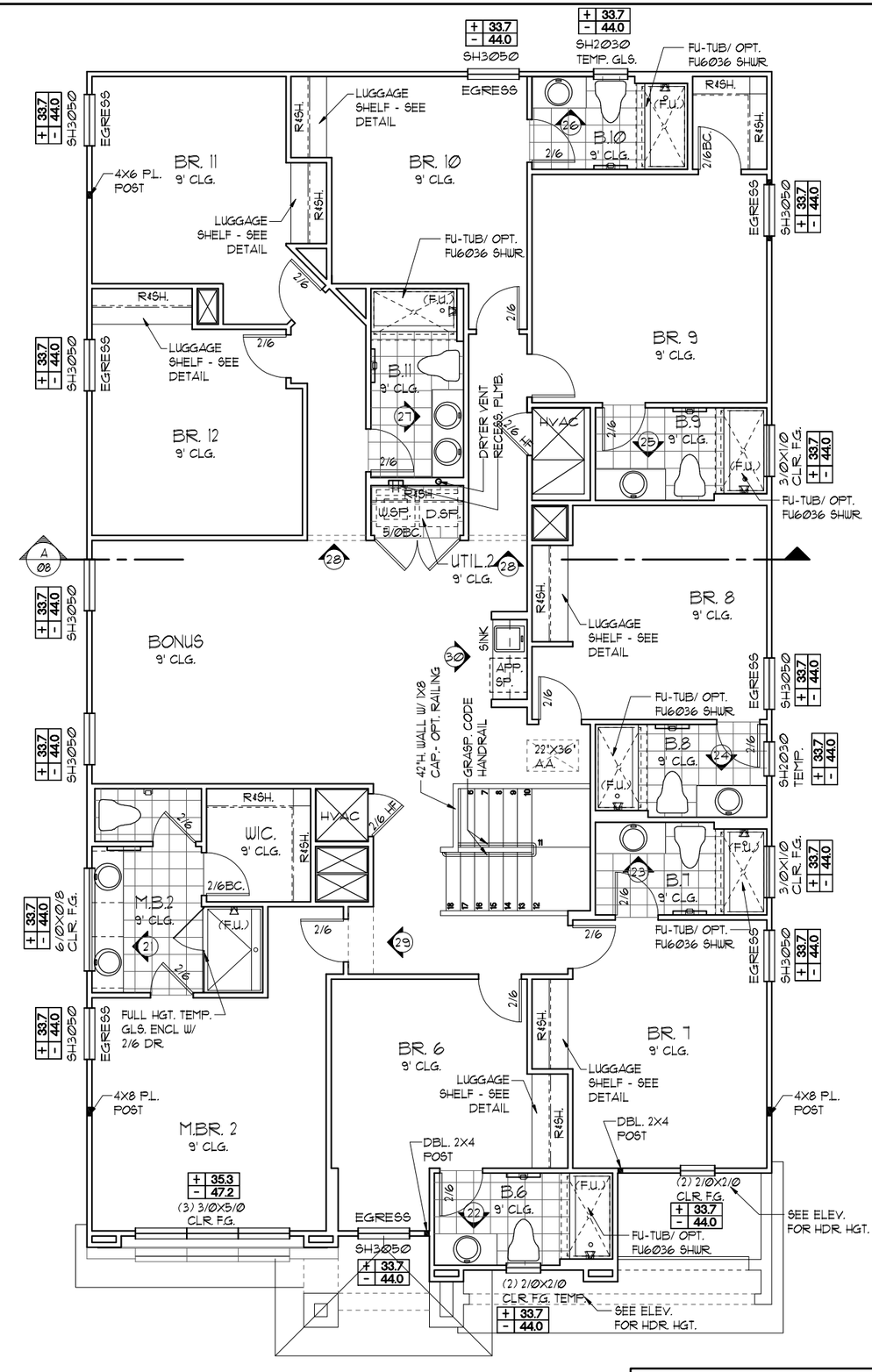

NOTE: ALL INTERIOR DOORS ON THIS FLOOR TO BE: 6'-8" U.N.O. - VERIFY WITH COLOR SHEET.

UPPER FLOOR PLAN NOTES "B"

1/8"=1'-0" (11X17) 1/4"=1'-0" (22X34)

THIS STRUCTURE IS DESIGNED TO WITHSTAND 140 MPH WINDS PER THE 7th EDITION, 2020 OF THE FLORIDA BUILDING CODE RESIDENTIAL AND IS CERTIFIED AS SUCH

LOT: 0000, PARADISO GRANDE

© COPYRIGHT 2015 Park Square Homes hereby reserves its common law copyrights and other copyrights in these plans, ideas, and design. These plans, ideas and designs are not to be copied or changed in any manner or form whatsoever, nor are they to be assigned to any third party without first obtaining the express written permission from Park Square Homes.

PARADISO GRANDE

REVISIONS	BY
06-25-21	DH

Engineering By:
DBE and C
MICHAEL A. THOMPSON
PE 47509
PHONE 407-721-2292

A DIVISION OF PARK SQUARE ENTERPRISES, INC.
5200 Vineland Road, Suite 200
Orlando, Florida 32811
Phone: (407) 529 - 3000

Park Square HOMES

FLOOR PLAN W/ NOTES

SANDALWOOD
PARADISO GRANDE

4842

DATE	04-09-21
SCALE	AS NOTED
DRAWN	RDC
JOB	4842
SHEET	05B.0
OF	00 SHEETS

LOAD INFORMATION

PER 7TH EDITION, 2020 FLORIDA BUILDING RESIDENTIAL CODE

DEAD LOADS

FLOOR:	STRUCTURE	7 PSF
	CEILINGS	3 PSF
	MECH/ELEC	5 PSF
	PARTITIONS	5 PSF
	TOTAL	20 PSF
ROOF:	SHEATHING	5 PSF
	STRUCTURE	7 PSF
	CEILINGS	3 PSF
	MECH/ELEC	5 PSF
	TOTAL	20 PSF

FLOOR LIVE LOADS

RESIDENTIAL FLOOR:	40 PSF
UNINHABITABLE ATTIC WITHOUT STORAGE:	10 PSF
UNINHABITABLE ATTIC W/LIMITED STORAGE:	20 PSF
ROOMS OTHER THAN SLEEPING ROOM:	40 PSF
SLEEPING ROOM:	30 PSF
STAIR LIVE LOAD:	40 PSF
BALCONIES:	40 PSF
PASSANGER VEHICLE GARAGE:	50 PSF

ROOF LIVE LOADS

MINIMUM ROOF LIVE LOAD (PSF)
TRIBUTARY LOADED AREA (SQ. FT.)
FOR ANY STRUCTURAL MEMBER

ROOF SLOPE	0-200	201-600	OVER 600
0:12 < 4:12	20	16	12
≥ 4:12 < 12:12	16	14	12
≥ 12:12	12	12	12

WIND INFORMATION

PER 7TH EDITION, 2020 FLORIDA BUILDING RESIDENTIAL CODE

1. BASIC WIND SPEED: 140 MPH
2. RISK CATEGORY II
3. WIND EXPOSURE: B
4. BUILDING TYPE: V B
5. ENCLOSURE CLASSIFICATION -- +/-.18, INCLUDED INTERNAL PRESSURE COEFFICIENT: IN NOTE #6
6. COMPONENT / CLADDING ----- SEE PLAN DESIGN WIND PRESSURE:

+	XXX	DESIGN WIND PRESSURE IAW FLA
-	XXX	RESIDENTIAL CODE, SECTION R301

NOTE: DESIGN PRESSURES BASED ON BASIC WIND SPEED AND NOT ULTIMATE WIND SPEED.

GENERAL NOTES

1. PROVIDE RECESS HOT & COLD WATER WITH DRAIN @ WASHER SPACE.
2. VENT DRYER THRU ROOF.
3. PROVIDE COLD WATER LINE FOR ICE MAKER LINE @ REF. SPACE.
4. DO NOT SCALE PRINTS! CONSTRUCTION TO BE FROM CALCULATED DIMENSIONS ONLY. ANY DISCREPANCIES OR ERRORS TO BE REPORTED PROMPTLY TO SUPERVISOR FOR CLARIFICATION.
5. MECHANICAL EQUIPMENT LOCATION TO BE DETERMINED BY COMMUNITY STANDARDS AND APPLICABLE COUNTY CODES.
6. DENOTES CONC. BLOCK WALL HGT. @ N/A

   DENOTES CONC. BLOCK WALL HGT. @ N/A
7. REFER TO TYPICAL DETAIL SHEET FOR EXTERIOR WALL FINISH SPECIFICATIONS
8. REFER TO DETAIL SHEETS FOR FLASHING REQUIREMENTS AT ALL WOOD TO MASONRY INTERFACES
9. ANCHOR THE CONDENSER UNIT TO SLAB PER CODE: M 1307.1 - M1307.2
10. ALL INTER. FIRST FLOOR CEILINGS AT 10'-0" UNLESS NOTED OTHERWISE.

    ALL INTER. SECOND FLOOR CEILINGS AT 9'-0" UNLESS NOTED OTHERWISE.

EGRESS WINDOW SCHEDULE- R310.2.1- FBCR2020

SH25	33 1/2" H. X 30" W.	MIN. NET CLEAR OPENING 5.7 SQFT

NOTE:

- ALL EMERGENCY ESCAPE WINDOW SILLS TO BE NOT MORE THAN 44"MIN. A.F.F.- R310.2 - FBCR (2020)
- WINDOWS SILLS LOCATED LESS THAN 24"ABOVE FINISH FLOOR AND GREATER THAN 72" FINISHED GRADE MUST COMPLY WITH FBCR 312.2

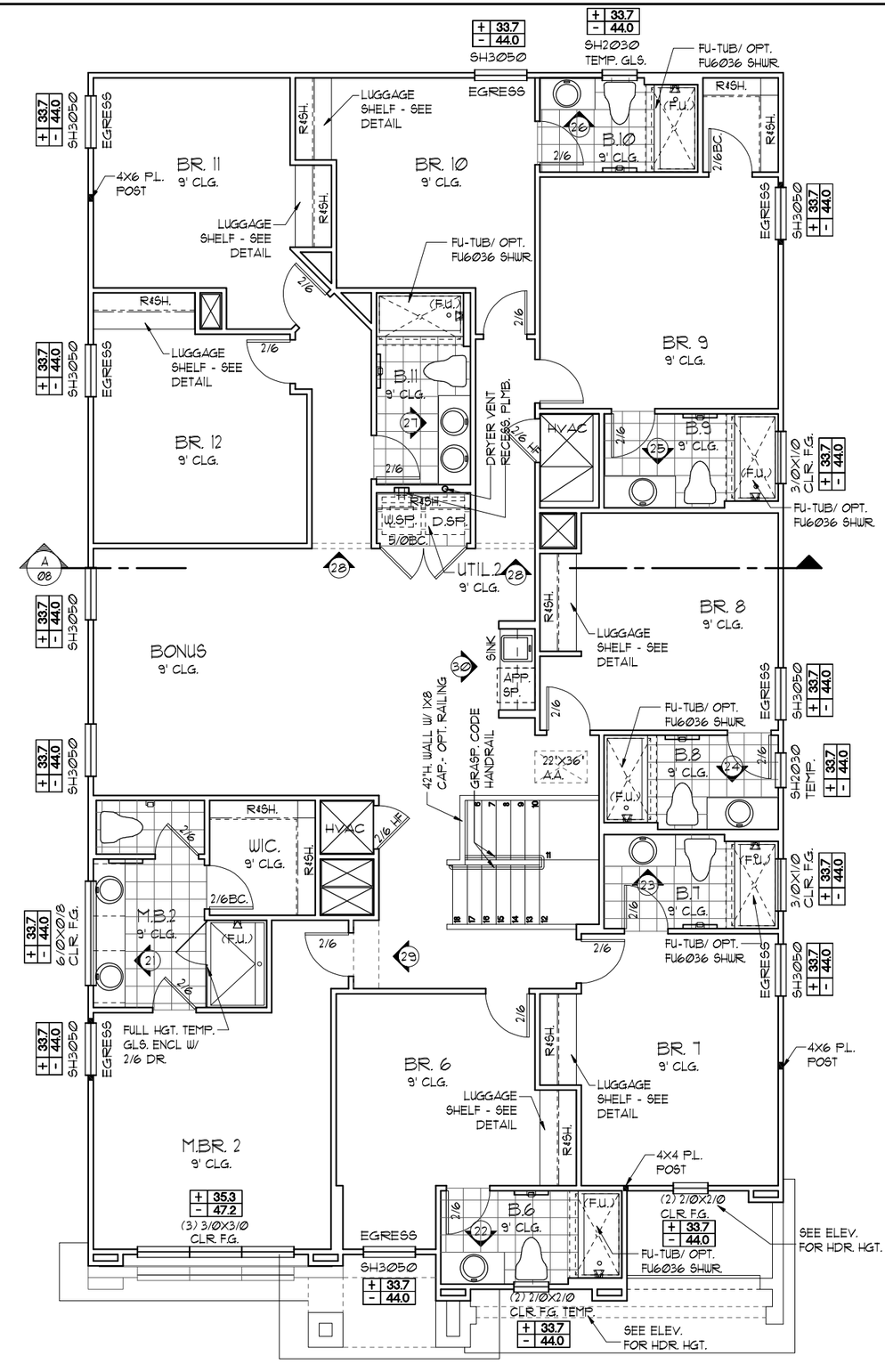

NOTE: ALL INTERIOR DOORS ON THIS FLOOR TO BE: 6'-8" U.N.O. - VERIFY WITH COLOR SHEET.

UPPER FLOOR PLAN NOTES "C"

1/8"=1'-0" (11X17) 1/4"=1'-0" (22X34)

THIS STRUCTURE IS DESIGNED TO WITHSTAND 140 MPH WINDS PER THE 7th EDITION, 2020 OF THE FLORIDA BUILDING CODE RESIDENTIAL AND IS CERTIFIED AS SUCH

LOT: 0000, PARADISO GRANDE

© COPYRIGHT 2015 Park Square Homes hereby reserves its common law copyrights and other copyrights in these plans, ideas, and design. These plans, ideas and designs are not to be copied or changed in any manner or form whatsoever, nor are they to be assigned to any third party without first obtaining the express written permission from Park Square Homes.

PARADISO GRANDE

REVISIONS	BY
06-25-21	DH

Engineering By:
DBE and C
MICHAEL A. THOMPSON
PE 47509
PHONE 407-721-2292

A DIVISION OF PARK SQUARE ENTERPRISES, INC.
5200 Vineland Road, Suite 200
Orlando, Florida 32811
Phone: (407) 529 - 3000

Park Square HOMES

FLOOR PLAN W/ NOTES

SANDALWOOD

PARADISO GRANDE

4842

DATE	04-09-21
SCALE	AS NOTED
DRAWN	RDC
JOB	4842
SHEET	05C.0
OF	00 SHEETS

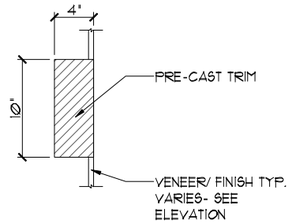

1 / 6A DETAIL
3/4"=1'-0" (11X17) 1½"=1'-0" (22X34)

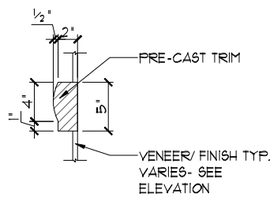

2 / 6A DETAIL
3/4"=1'-0" (11X17) 1½"=1'-0" (22X34)

EXTERIOR FINISH NOTES

1. LATH TO BE ATTACHED IAW R703.7.1 OF THE 7TH EDITION, FBCR. 2020
2. PLASTERING TO BE WITH PORTLAND CEMENT, INSTALLED IAW R703.7.2 OF THE 7TH EDITION, FBCR. 2020
3. WEEP SCREED TO BE INSTALLED IAW R703.7.2.1 OF THE 7TH EDITION, FBCR. 2020
4. WATER RESISTANT BARRIER TO BE INSTALLED IAW R703.7.3 OF THE 7TH EDITION, FBCR. 2020
5. "ZIP SYSTEMS" WALL AND ROOF SHEATHING MAY BE USED AS AN ALTERNATIVE FOR WALL AND ROOF SHEATHING AND VAPOR BARRIER, ON EXTERIOR WALLS AND ROOF.

FRONT ELEVATION "A"
1/8"=1'-0" (11X17) 1/4"=1'-0" (22X34)

REAR ELEVATION
1/8"=1'-0" (11X17) 1/4"=1'-0" (22X34)

THIS STRUCTURE IS DESIGNED TO WITHSTAND 140 MPH WINDS PER THE 7th EDITION, 2020 OF THE FLORIDA BUILDING CODE RESIDENTIAL AND IS CERTIFIED AS SUCH

LOT: 0000, PARADISO GRANDE

© COPYRIGHT 2015 Park Square Homes hereby reserves its common law copyrights and other copyrights in these plans, ideas, and design. These plans, ideas and designs are not to be copied or changed in any manner or form whatsoever, nor are they to be assigned to any third party without first obtaining the express written permission from Park Square Homes.

PARADISO GRANDE

REVISIONS	BY
06-25-21	DH

Engineering By:
DBE and C
MICHAEL A. THOMPSON
PE 47509
PHONE 407-721-2292

A DIVISION OF PARK SQUARE ENTERPRISES, INC.
5200 Vineland Road, Suite 200
Orlando, Florida 32811
Phone: (407) 529 - 3000

Park Square HOMES

EXTERIOR ELEVATION "A"
FRONT AND REAR

SANDALWOOD
PARADISO GRANDE

4842

DATE	04-09-21
SCALE	AS NOTED
DRAWN	RDC
JOB	4842
SHEET	06A.0
OF	00 SHEETS

EXTERIOR FINISH NOTES

1. LATH TO BE ATTACHED IAW R703.7.1 OF THE 7TH EDITION, FBCR. 2020
2. PLASTERING TO BE WITH PORTLAND CEMENT, INSTALLED IAW R703.7.2 OF THE 7TH EDITION, FBCR. 2020
3. WEEP SCREED TO BE INSTALLED IAW R703.7.2.1 OF THE 7TH EDITION, FBCR. 2020
4. WATER RESISTANT BARRIER TO BE INSTALLED IAW R703.7.3 OF THE 7TH EDITION, FBCR. 2020
5. "ZIP SYSTEMS" WALL AND ROOF SHEATHING MAY BE USED AS AN ALTERNATIVE FOR WALL AND ROOF SHEATHING AND VAPOR BARRIER, ON EXTERIOR WALLS AND ROOF.

FRONT ELEVATION "B"

1/8"=1'-0" (11X17) 1/4"=1'-0" (22X34)

REAR ELEVATION

1/8"=1'-0" (11X17) 1/4"=1'-0" (22X34)

THIS STRUCTURE IS DESIGNED TO WITHSTAND 140 MPH WINDS PER THE 7th EDITION, 2020 OF THE FLORIDA BUILDING CODE RESIDENTIAL AND IS CERTIFIED AS SUCH

LOT: 0000, PARADISO GRANDE

© COPYRIGHT 2015 Park Square Homes hereby reserves its common law copyrights and other copyrights in these plans, ideas, and design. These plans, ideas and designs are not to be copied or changed in any manner or form whatsoever, nor are they to be assigned to any third party without first obtaining the express written permission from Park Square Homes.

PARADISO GRANDE

REVISIONS	BY
06-25-21	DH

Engineering By:
DBE and C
MICHAEL A. THOMPSON
PE 47509
PHONE 407-721-2292

A DIVISION OF PARK SQUARE ENTERPRISES, INC.
5200 Vineland Road, Suite 200
Orlando, Florida 32811
Phone: (407) 529 - 3000

Park Square HOMES

EXTERIOR ELEVATION "B" FRONT AND REAR

SANDALWOOD

PARADISO GRANDE

4842

DATE	04-09-21
SCALE	AS NOTED
DRAWN	RDC
JOB	4842
SHEET	06B.0
OF	00 SHEETS

EXTERIOR FINISH NOTES

1. LATH TO BE ATTACHED IAW R703.7.1 OF THE 7TH EDITION, FBCR. 2020
2. PLASTERING TO BE WITH PORTLAND CEMENT, INSTALLED IAW R703.7.2 OF THE 7TH EDITION, FBCR. 2020
3. WEEP SCREED TO BE INSTALLED IAW R703.7.2.1 OF THE 7TH EDITION, FBCR. 2020
4. WATER RESISTANT BARRIER TO BE INSTALLED IAW R703.7.3 OF THE 7TH EDITION, FBCR. 2020
5. "ZIP SYSTEMS" WALL AND ROOF SHEATHING MAY BE USED AS AN ALTERNATIVE FOR WALL AND ROOF SHEATHING AND VAPOR BARRIER, ON EXTERIOR WALLS AND ROOF.

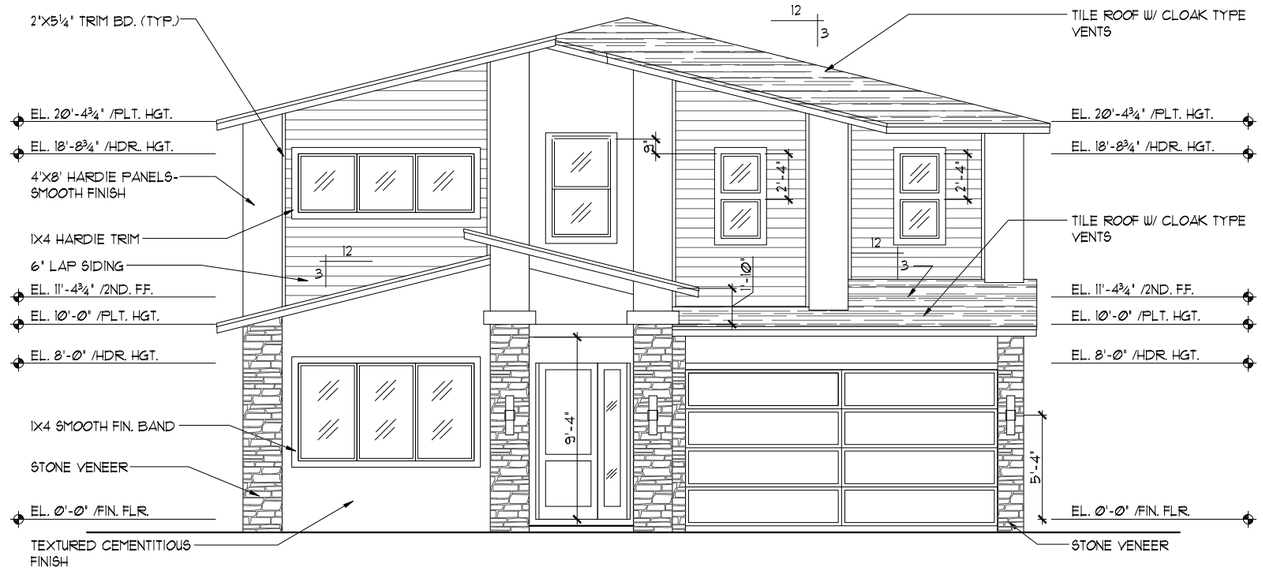

FRONT ELEVATION "C"

1/8"=1'-0" (11X17) 1/4"=1'-0" (22X34)

REAR ELEVATION

1/8"=1'-0" (11X17) 1/4"=1'-0" (22X34)

THIS STRUCTURE IS DESIGNED TO WITHSTAND 140 MPH WINDS PER THE 7th EDITION, 2020 OF THE FLORIDA BUILDING CODE RESIDENTIAL AND IS CERTIFIED AS SUCH

LOT: 0000, PARADISO GRANDE

© COPYRIGHT 2015 Park Square Homes hereby reserves its common law copyrights and other copyrights in these plans, ideas, and design. These plans, ideas and designs are not to be copied or changed in any manner or form whatsoever, nor are they to be assigned to any third party without first obtaining the express written permission from Park Square Homes.

PARADISO GRANDE

REVISIONS	BY
06-25-21	DH

Engineering By:
DBE and C
MICHAEL A. THOMPSON
PE 47509
PHONE 407-721-2292

A DIVISION OF PARK SQUARE ENTERPRISES, INC.
5200 Vineland Road, Suite 200
Orlando, Florida 32811
Phone: (407) 529 - 3000

Park Square HOMES

EXTERIOR ELEVATION "C"
FRONT AND REAR

SANDALWOOD
PARADISO GRANDE

4842

DATE	04-09-21
SCALE	AS NOTED
DRAWN	RDC
JOB	4842
SHEET	06C.0
OF	00 SHEETS

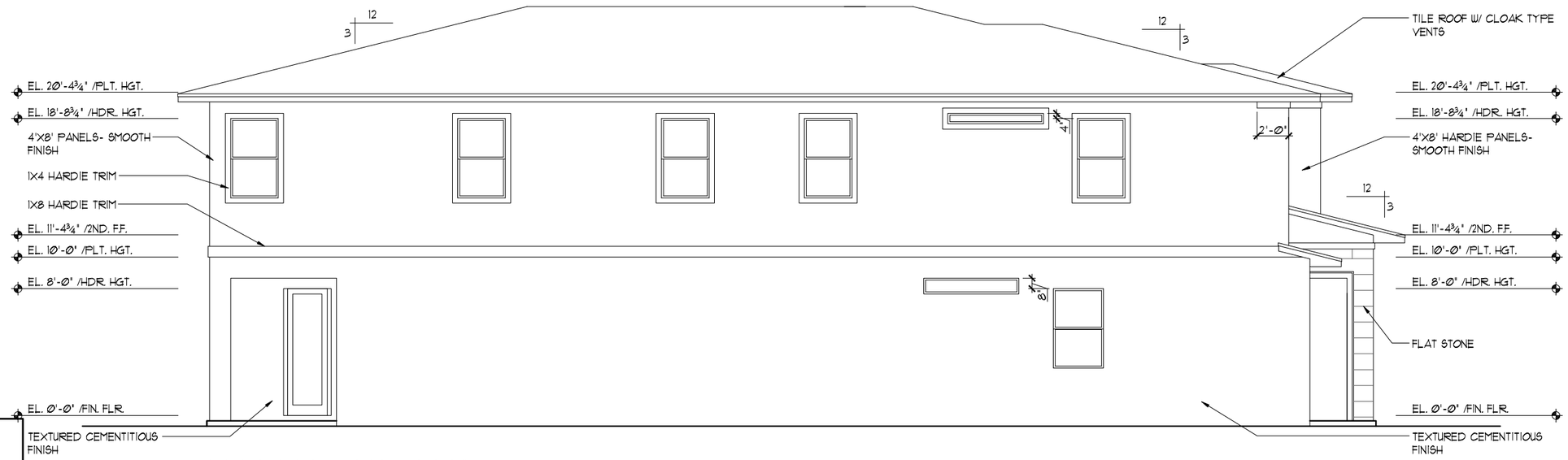

LEFT ELEVATION "A"

1/8"=1'-0" (11X17) 1/4"=1'-0" (22X34)

EXTERIOR FINISH NOTES

1. LATH TO BE ATTACHED IAW R703.7.1 OF THE 7TH EDITION, FBCR 2020
2. PLASTERING TO BE WITH PORTLAND CEMENT, INSTALLED IAW R703.7.2 OF THE 7TH EDITION, FBCR 2020
3. WEEP SCREED TO BE INSTALLED IAW R703.7.2.1 OF THE 7TH EDITION, FBCR 2020
4. WATER RESISTANT BARRIER TO BE INSTALLED IAW R703.7.3 OF THE 7TH EDITION, FBCR 2020
5. "ZIP SYSTEMS" WALL AND ROOF SHEATHING MAY BE USED AS AN ALTERNATIVE FOR WALL AND ROOF SHEATHING AND VAPOR BARRIER, ON EXTERIOR WALLS AND ROOF.

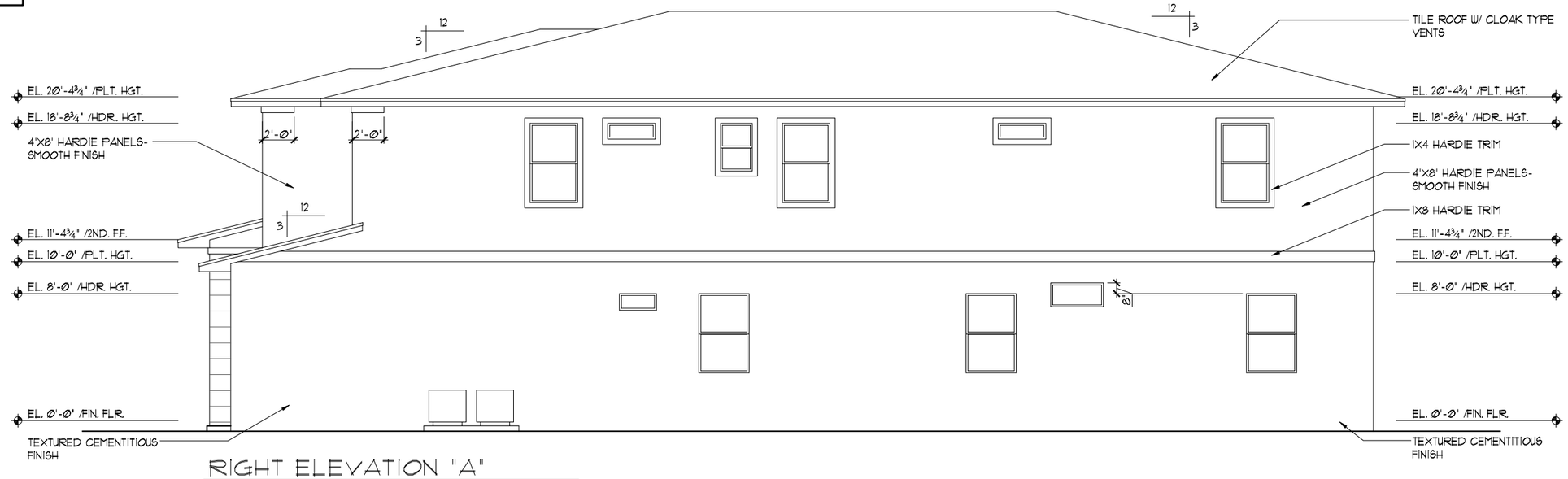

RIGHT ELEVATION "A"

1/8"=1'-0" (11X17) 1/4"=1'-0" (22X34)

THIS STRUCTURE IS DESIGNED TO WITHSTAND 140 MPH WINDS PER THE 7th EDITION, 2020 OF THE FLORIDA BUILDING CODE RESIDENTIAL AND IS CERTIFIED AS SUCH

LOT: 0000, PARADISO GRANDE

© COPYRIGHT 2015 Park Square Homes hereby reserves its common law copyrights and other copyrights in these plans, ideas, and design. These plans, ideas and designs are not to be copied or changed in any manner or form whatsoever, nor are they to be assigned to any third party without first obtaining the express written permission from Park Square Homes.

PARADISO GRANDE

REVISIONS	BY
06-25-21	DH

Engineering By:
DBE and C
MICHAEL A. THOMPSON
PE 47509
PHONE 407-721-2292

A DIVISION OF PARK SQUARE ENTERPRISES, INC.
5200 Vineland Road, Suite 200
Orlando, Florida 32811
Phone: (407) 529 - 3000

Park Square HOMES

EXTERIOR ELEVATION "A" LEFT AND RIGHT

SANDALWOOD

PARADISO GRANDE

4842

DATE	04-09-21
SCALE	AS NOTED
DRAWN	RDC
JOB	4842
SHEET	07A.0
OF	00 SHEETS

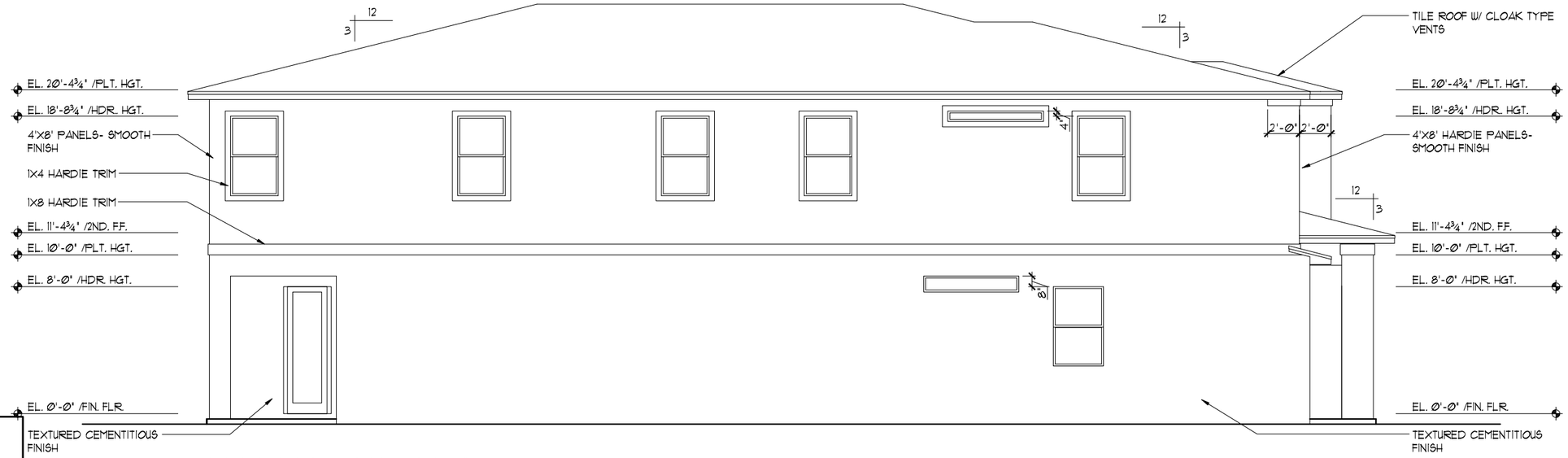

LEFT ELEVATION "B"

1/8"=1'-0" (11X17) 1/4"=1'-0" (22X34)

EXTERIOR FINISH NOTES

1. LATH TO BE ATTACHED IAW R703.7.1 OF THE 7TH EDITION, FBCR. 2020
2. PLASTERING TO BE WITH PORTLAND CEMENT, INSTALLED IAW R703.7.2 OF THE 7TH EDITION, FBCR. 2020
3. WEEP SCREED TO BE INSTALLED IAW R703.7.2.1 OF THE 7TH EDITION, FBCR. 2020
4. WATER RESISTANT BARRIER TO BE INSTALLED IAW R703.7.3 OF THE 7TH EDITION, FBCR. 2020
5. 'ZIP SYSTEMS' WALL AND ROOF SHEATHING MAY BE USED AS AN ALTERNATIVE FOR WALL AND ROOF SHEATHING AND VAPOR BARRIER, ON EXTERIOR WALLS AND ROOF.

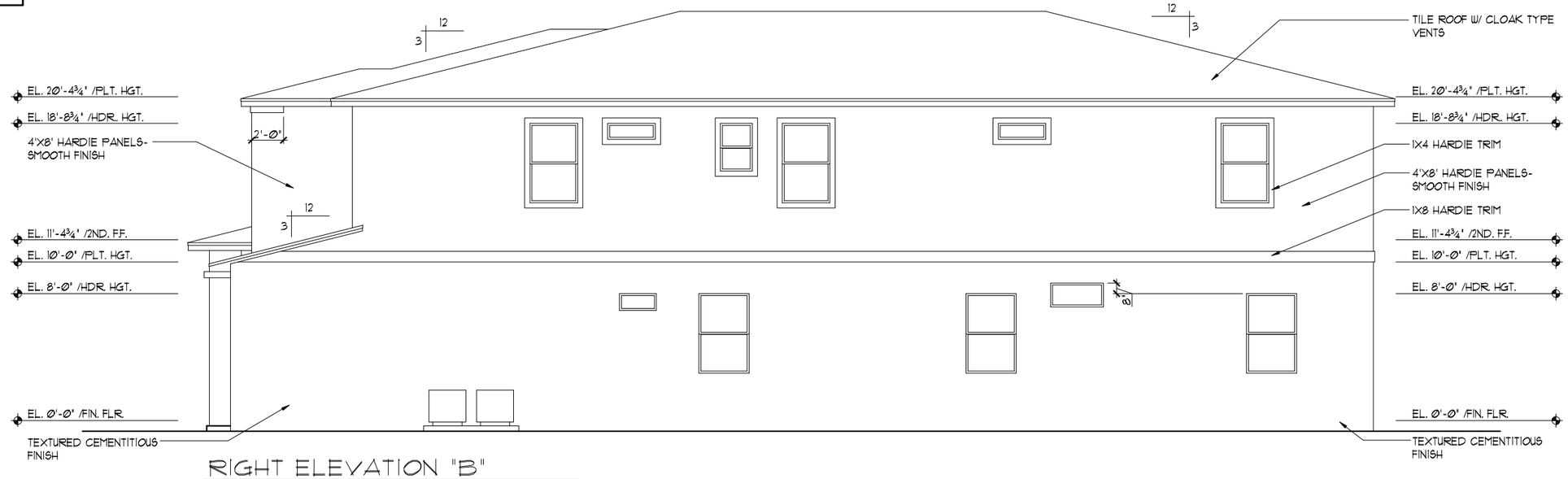

RIGHT ELEVATION "B"

1/8"=1'-0" (11X17) 1/4"=1'-0" (22X34)

THIS STRUCTURE IS DESIGNED TO WITHSTAND 140 MPH WINDS PER THE 7th EDITION, 2020 OF THE FLORIDA BUILDING CODE RESIDENTIAL AND IS CERTIFIED AS SUCH

LOT: 0000, PARADISO GRANDE

© COPYRIGHT 2015 Park Square Homes hereby reserves its common law copyrights and other copyrights in these plans, ideas, and design. These plans, ideas and designs are not to be copied or changed in any manner or form whatsoever, nor are they to be assigned to any third party without first obtaining the express written permission from Park Square Homes.

PARADISO GRANDE

REVISIONS	BY
06-25-21	DH

Engineering By:
DBE and C
MICHAEL A. THOMPSON
PE 47509
PHONE 407-721-2292

A DIVISION OF PARK SQUARE ENTERPRISES, INC.
5200 Vineland Road, Suite 200
Orlando, Florida 32811
Phone: (407) 529 - 3000

Park Square HOMES

EXTERIOR ELEVATION "B" LEFT AND RIGHT

SANDALWOOD

PARADISO GRANDE

4842

DATE	04-09-21
SCALE	AS NOTED
DRAWN	RDC
JOB	4842
SHEET	07B.0
OF	00 SHEETS

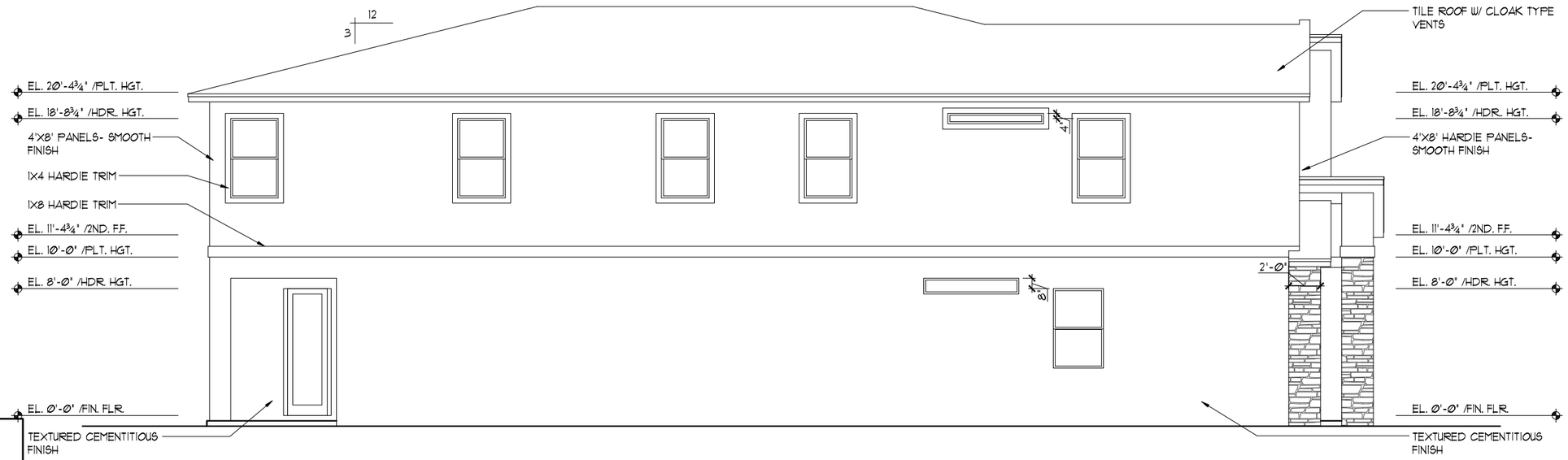

LEFT ELEVATION "C"

1/8"=1'-0" (11X17) 1/4"=1'-0" (22X34)

EXTERIOR FINISH NOTES

1. LATH TO BE ATTACHED IAW R703.7.1 OF THE 7TH EDITION, FBCR 2020
2. PLASTERING TO BE WITH PORTLAND CEMENT, INSTALLED IAW R703.7.2 OF THE 7TH EDITION, FBCR 2020
3. WEEP SCREED TO BE INSTALLED IAW R703.7.2.1 OF THE 7TH EDITION, FBCR 2020
4. WATER RESISTANT BARRIER TO BE INSTALLED IAW R703.7.3 OF THE 7TH EDITION, FBCR 2020
5. "ZIP SYSTEMS" WALL AND ROOF SHEATHING MAY BE USED AS AN ALTERNATIVE FOR WALL AND ROOF SHEATHING AND VAPOR BARRIER, ON EXTERIOR WALLS AND ROOF.

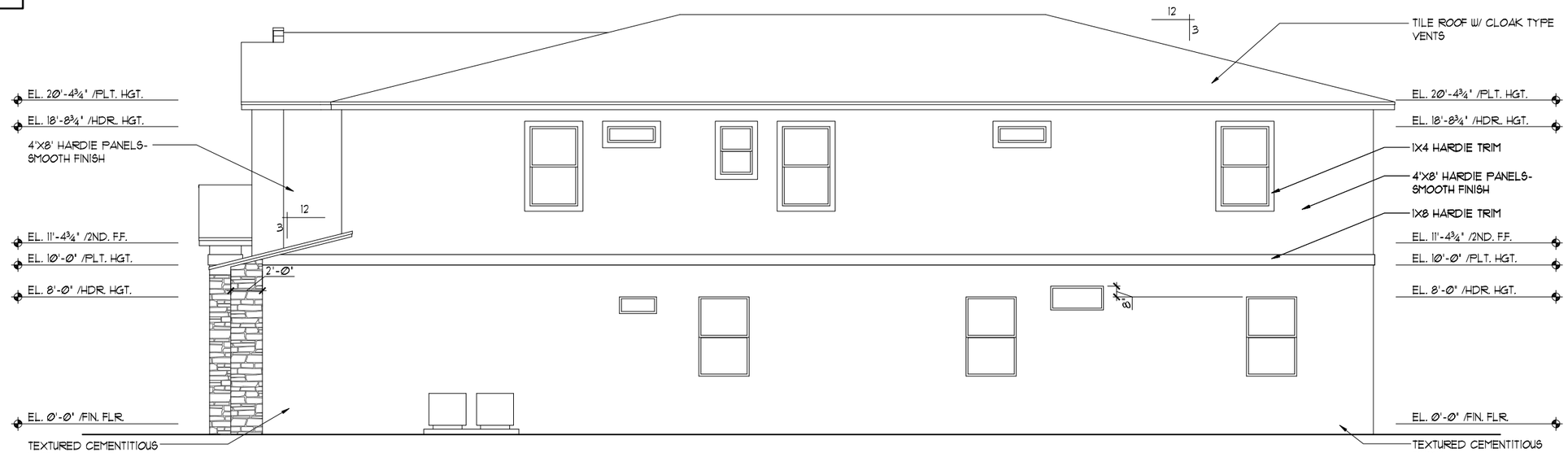

RIGHT ELEVATION "C"

1/8"=1'-0" (11X17) 1/4"=1'-0" (22X34)

THIS STRUCTURE IS DESIGNED TO WITHSTAND 140 MPH WINDS PER THE 7th EDITION, 2020 OF THE FLORIDA BUILDING CODE RESIDENTIAL AND IS CERTIFIED AS SUCH

LOT: 0000, PARADISO GRANDE

© COPYRIGHT 2015 Park Square Homes hereby reserves its common law copyrights and other copyrights in these plans, ideas, and design. These plans, ideas and designs are not to be copied or changed in any manner or form whatsoever, nor are they to be assigned to any third party without first obtaining the express written permission from Park Square Homes.

PARADISO GRANDE

REVISIONS	BY
06-25-21	DH

Engineering By:
DBE and C
MICHAEL A. THOMPSON
PE 47509
PHONE 407-721-2292

A DIVISION OF PARK SQUARE ENTERPRISES, INC.
5200 Vineland Road, Suite 200
Orlando, Florida 32811
Phone: (407) 529 - 3000

Park Square HOMES

EXTERIOR ELEVATION "C" LEFT AND RIGHT

SANDALWOOD

PARADISO GRANDE

4842

DATE	04-09-21
SCALE	AS NOTED
DRAWN	RDC
JOB	4842
SHEET	07C.0
OF	00 SHEETS

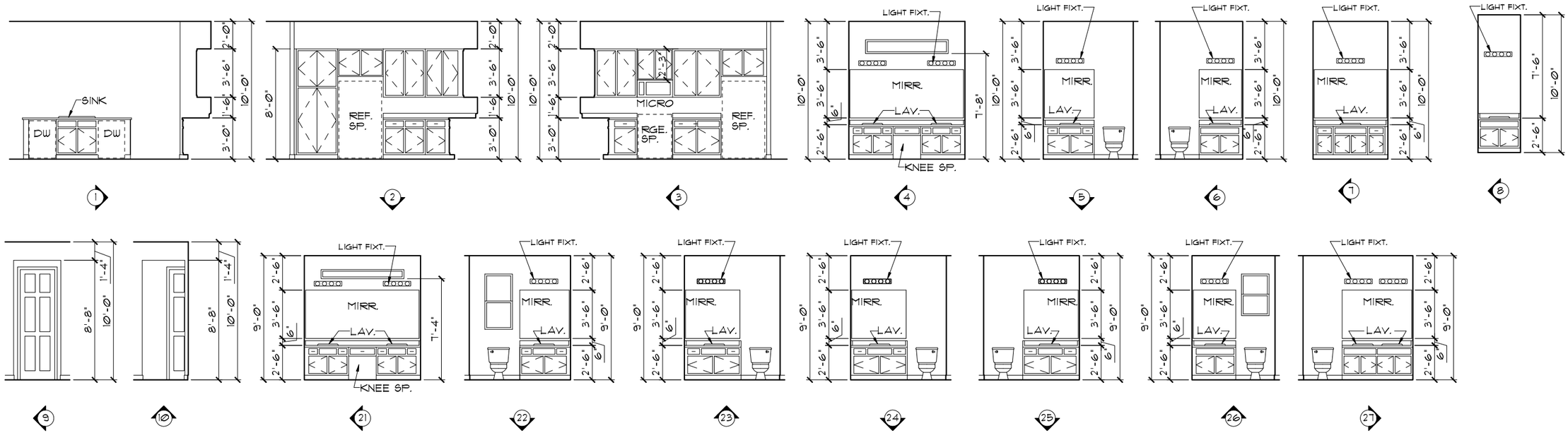

NOTE: THE ARCH HEIGHTS ARE THE FINISHED DIMENSIONS

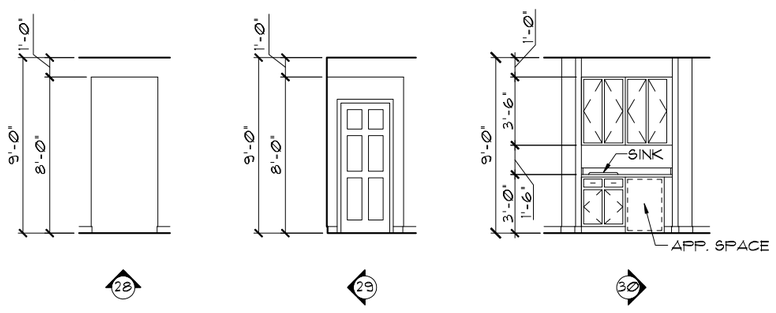

INTERIOR ELEVATIONS

1/8"=1'-0" (11X17) 1/4"=1'-0" (22X34)

NOTE: INTERIOR ELEVATIONS ARE CONCEPTUAL ONLY. SEE CABINET SHOP DRAWINGS FOR FINAL VERIFICATION.

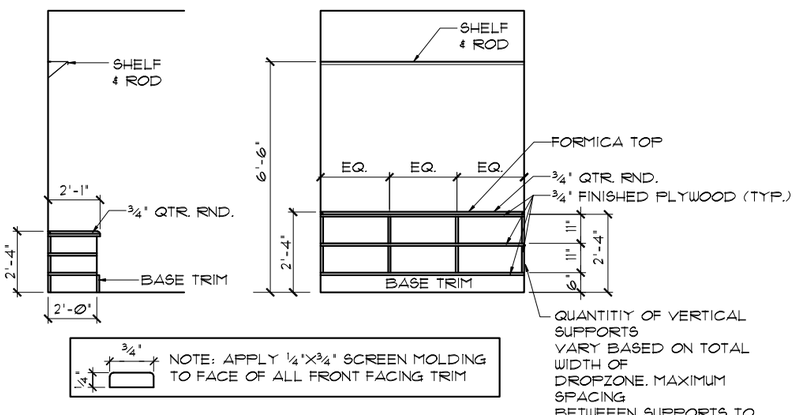

LUGGAGE SHELF DETAIL

1/8"=1'-0" (11X17) 1/4"=1'-0" (22X34)

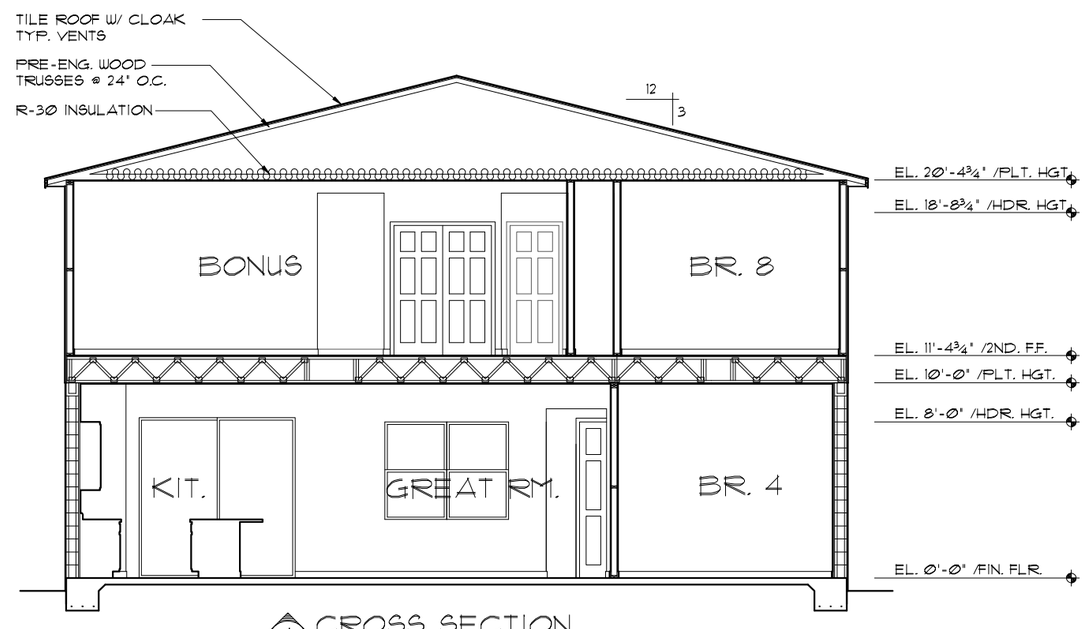

CROSS SECTION

A/08

1/8"=1'-0" (11X17) 1/4"=1'-0" (22X34)

THIS STRUCTURE IS DESIGNED TO WITHSTAND 140 MPH WINDS PER THE 7th EDITION, 2020 OF THE FLORIDA BUILDING CODE RESIDENTIAL AND IS CERTIFIED AS SUCH

LOT: 0000, PARADISO GRANDE

© COPYRIGHT 2015 Park Square Homes hereby reserves its common law copyrights and other copyrights in these plans, ideas, and design. These plans, ideas and designs are not to be copied or changed in any manner or form whatsoever, nor are they to be assigned to any third party without first obtaining the express written permission from Park Square Homes.

PARADISO GRANDE

REVISIONS	BY
06-25-21	DH

Engineering By:
DBE and C
MICHAEL A. THOMPSON
PE 47509
PHONE 407-721-2292

A DIVISION OF PARK SQUARE ENTERPRISES, INC.
5200 Vineland Road, Suite 200
Orlando, Florida 32811
Phone: (407) 529 - 3000

Park Square HOMES

CROSS SECTION / INTERIOR ELEVATIONS

SANDALWOOD

PARADISO GRANDE

4842

DATE	04-09-21
SCALE	AS NOTED
DRAWN	RDC
JOB	4842
SHEET	08
OF	00 SHEETS

MECHANICAL/GENERAL NOTES

PER 7TH ED. 2020 FLA BLD. CODE-RESIDENTIAL

1.) COMPLETE DUCT DESIGN W/ SIZES & R-VALUE COMPLYING W/ THE FLORIDA ENERGY EFFICIENCY CODE FOR BUILDING CONSTRUCTION 610.1 ABC.1

2.)APPLIANCES SHALL BE ACESSIBLE FOR INSPECTION, SERVICE, REPAIR AND REPLACEMENT WITHOUT REMOVING PERMANENT CONSTRUCTION.
A.) CHAPTER 13 OF THE FBC-R 2020 7TH SECTION M1305.1

3.) AIR CONDITIONING SYSTEM SHALL BE COMPLETELY BALANCED. ALL ROOMS ISOLATED FROM THE RETURN AIR SHALL BE PROVIDED WITH MEANS TO COMPLY WITH SECTION M1602 OF THE FBCR CODE 2020 7TH EDITION.

4.) IAW NEC 2017- 210.12-ALL 15A OR 20A, 120V BRANCH CIRCUITS SUPPLYING OUTLETS OR DEVICES IN THE FOLLOWING LOCATIONS REQUIRE AFCI PROTECTION- KITCHEN, FAMILY RMS, DINING RMS, LIVING RMS, PARLORS, LIBRARIES, BEDROOMS, DENS, CLOSETS, SUNROOMS, RECREATION RMS, HALLWAYS OR SIMILAR AREAS SHALL BE PROTECTED BY A LISTED AFCI DEVICE OF THE COMBINATION TYPE.

5.) IAW NEC 2017- 406.12, ALL 15A AND 20A, 125V RECEPTACLES SHALL BE LISTED AS TAMPER RESISTANT.
6.) ALL OUTLETS IN BATHROOMS AND LAUNDRY ROOM SHALL BE GFCI

7.) SMOKE ALARMS SHALL BE IN ALL SLEEPING AREAS, SHALL BE INTERCONNECTED, SHALL BE WITHIN 1' TO 3' OF PEAK & SHALL BE 3' FROM THE SUPPLY OR RETURN AIR- STREAM & EQUIPPED W/ A BATTERY BACKUP. ALARMS MAY NOT BE CONNECTED WHERE ALARMS ARE WIRELESS & ALL ALARMS SOUND UPON ACTIVATION IAW FBCR R314.3 & R314.4. MODEL# TO BE USED ON THIS JOB TO BE:

BRK: SMOKE-9120B, C/O- SC9120B
KIDDE: SMOKE-21007581, C/O 21006377-N

8.) ALL WATER HEATERS HAVING AN IGNITION SOURCE TO BE ELEVATED SUCH THAT THE SOURCE OF IGNITION IS MINIMUM 18" ABOVE GARAGE FLOOR UNLESS WATER HEATER IS LISTED AS FLAMMABLE VAPOR IGNITION RESISTANT. IAW FBCR 2020, 7TH ED. P2801.7

9.) ALL EQUIPMENT & APPLIANCES, INCLUDING WATER HEATERS HAVING AN IGNITION SOURCE TO BE ELEVATED SUCH THAT THE SOURCE OF IGNITION IS MINIMUM 18" ABOVE GARAGE FLOOR UNLESS IT IS LISTED AS FLAMMABLE VAPOR IGNITION RESISTANT. IAW FBCR 2020, 7TH ED.

10.)THE MAXIMUM ALLOWABLE EXHAUST DUCT LENGTH SHALL BE DETERMINED BY ONE OF THE METHODS SPECIFIED IN SECTIONS M1502.4.5.1 THROUGH M1502.4.5.3

11.) ALL ELECTRICAL WORK TO BE DONE PER NFPA70-**NEC 2017**

12.) ADDITIONAL ELECTRODE MAY BE REQUIRED IN ACCORDANCE WITH NEC 250.53(A)(2)

12.) ALL DWELLING UNIT RECEPTACLE WILL BE IN ACCORDANCE WITH NFPA70-NEC2017 - ARTICLE 210-52

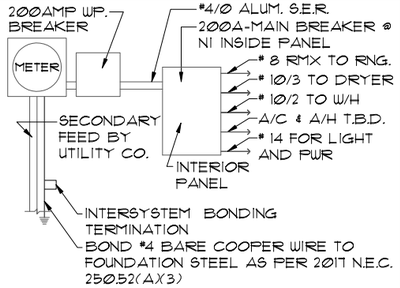

ELECTRICAL RISER DIAGRAM

NOTE: N.T.S.
ELECTRICAL MATERIALS AND INSTALLATIONS SHALL COMPLY W/ APPLICABLE PROVISIONS OF THE NATIONAL ELEC. CODE 250.52(A)(1) TO (6), LOCAL CODES, AND THE LOCAL POWER COMPANY.

250.52(A)(3) Concrete-Encased Electrode.
Concrete-encased electrodes can be horizontal or vertical and must be at least 20 ft. long.

Concrete-encased electrodes can be horizontal or vertical and must be at least 20 ft. long.

There are two types of concrete-encased electrodes: (1) steel reinforcing bars or rods which are not less than ½ inch in diameter and at least 20 ft. long, encased in 2 inches of concrete; (2) 20 ft. of bare copper conductor not smaller than No. 4 AWG encased in 2 inches of concrete.

The steel reinforcing rods must be in a location that is in direct contact with the earth. The reinforcing rods can be connected with tie wires, and a single length of rod can be used as the concrete-encased electrode. The reinforcing rods cannot be coated with non-conductive material.

Section 250.50 requires a concrete-encased electrode to be connected to the grounding electrode system if it is present. Several states have modified this requirement to say a concrete-encased electrode must be used as a grounding electrode only if it is available. In those jurisdictions, if the footings or foundations have been poured before the electrical contractor arrives at the site, and a reinforcing rod is not available for use as a grounding electrode, then a grounding connection to the reinforcing rod is not required.

NOTE: IF MORE THAN 12 SMOKE ALARMS OR CARBON MONOXIDE ALARM COMBINATION ARE INSTALLED IN THE HOME CRIME PREVENTION WILL PULL A SEPARATE FIRE PERMIT AND THE SYSTEM WILL BE MONITORED

ELECTRICAL LEGEND

	SINGLE POLE SWITCH		OUTLET, TV/CABLE
	THREE WAY SWITCH		OUTLET, PHONE
	OUTLET 110-115		INTERCOM
	OUT. 110-115, SPLIT WIRED		CHIMES
	OUT. 110-115, W/ USB		SMOKE DETECTOR
	OUT. 110-115, CLG. MOUNT.	CM	CARBON MONOXIDE
	OUT. 110-115, FLR. MOUNT.		PUSH BUTTON
	SPCL. PURPOSE 220-240		EXHAUST FAN
	LIGHT FIXT., CLG. MTD.		EX. FAN/LIGHT COMBO
	LIGHT FIXT., WALL MTD.		DISPOSAL
	LIGHT FIXT., RECESSED		ELECTRICAL PANEL
E	LIGHT FIXT., REC. ADJUST.		CEILING FAN, PREWIRE
PC	LIGHT FIXT., PULL CHAIN	F	CEILING FAN, INSTALL
	LIGHT FIXT.,FLUORESCENT	J	ELECT. JUNCTION BOX
	LIGHT FIXT., EXT. FLOODS		THERMOSTAT
EXIT	LIGHT FIXT., EMERG. EXIT		DISCONNECT SWITCH
	LIGHT FIXT., EXIT/BACKUP		ELEC. POWER METER

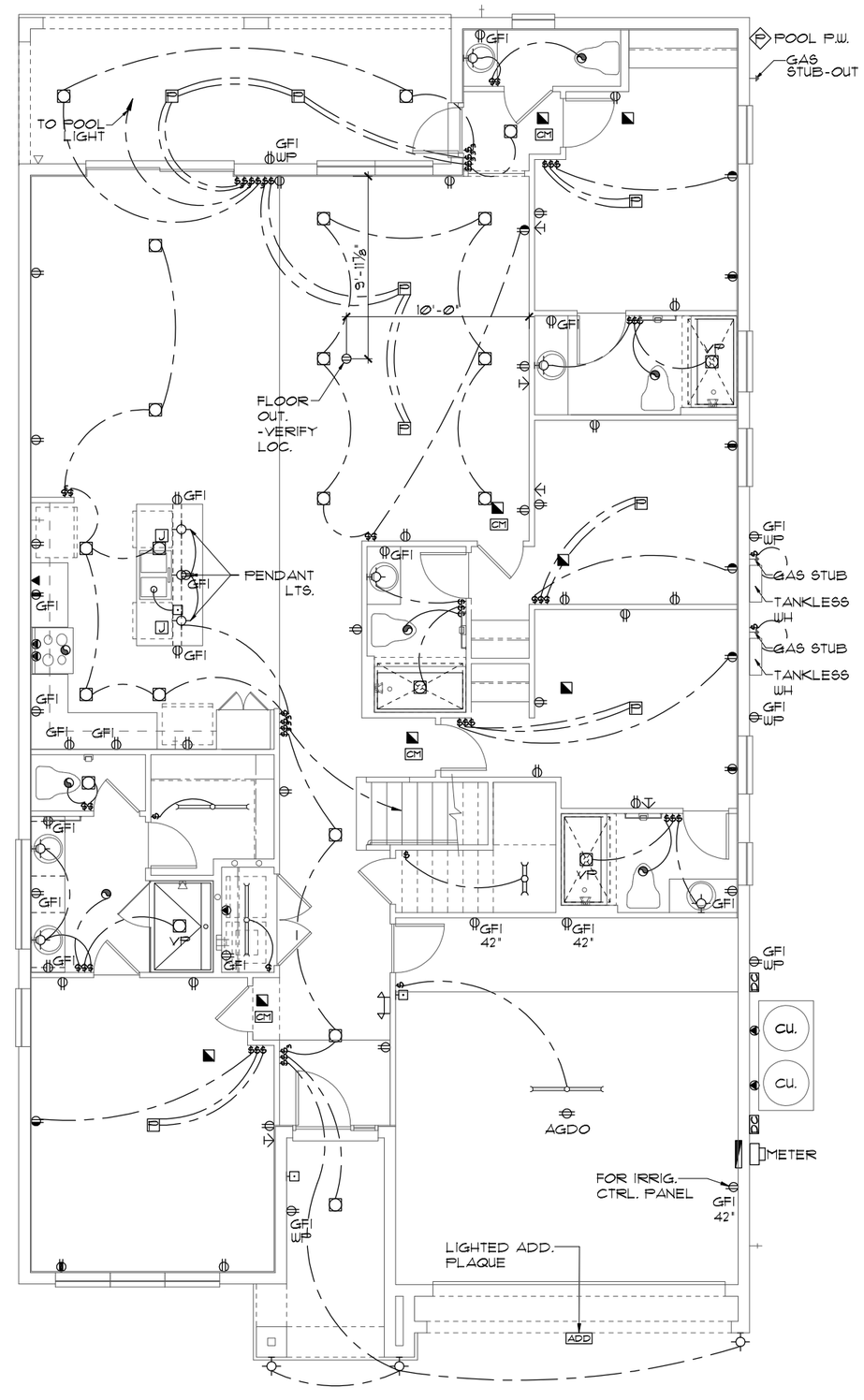

ELECTRICAL PLAN "A"

1/8"=1'-0" (11X17) 1/4"=1'-0" (22X34)

THIS STRUCTURE IS DESIGNED TO WITHSTAND 140 MPH WINDS PER THE 7th EDITION, 2020 OF THE FLORIDA BUILDING CODE RESIDENTIAL AND IS CERTIFIED AS SUCH

LOT: 0000, PARADISO GRANDE

© COPYRIGHT 2015
Park Square Homes hereby reserves its common law copyrights and other copyrights in these plans, ideas, and design. These plans, ideas and designs are not to be copied or changed in any manner or form whatsoever, nor are they to be assigned to any third party without first obtaining the express written permission from Park Square Homes.

PARADISO GRANDE

REVISIONS	BY
06-25-21	DH

Engineering By:
DBE and C
MICHAEL A. THOMPSON
PE 47509
PHONE 407-721-2292

A DIVISION OF PARK SQUARE ENTERPRISES, INC.
5200 Vineland Road, Suite 200
Orlando, Florida 32811
Phone: (407) 529 - 3000

Park Square HOMES

ELECTRICAL PLAN

SANDALWOOD
PARADISO GRANDE

4842

DATE	04-09-21
SCALE	AS NOTED
DRAWN	RDC
JOB	4842
SHEET	09A.0
OF	00 SHEETS

MECHANICAL/GENERAL NOTES

PER 7TH ED. 2020 FLA BLD. CODE-RESIDENTIAL

1.) COMPLETE DUCT DESIGN W/ SIZES & R-VALUE COMPLYING W/ THE FLORIDA ENERGY EFFICIENCY CODE FOR BUILDING CONSTRUCTION 610.1 ABC.1

2.)APPLIANCES SHALL BE ACESSIBLE FOR INSPECTION, SERVICE, REPAIR AND REPLACEMENT WITHOUT REMOVING PERMANENT CONSTRUCTION.
A) CHAPTER 13 OF THE FBC-R 2020 7TH SECTION M1305.1

3.) AIR CONDITIONING SYSTEM SHALL BE COMPLETELY BALANCED. ALL ROOMS ISOLATED FROM THE RETURN AIR SHALL BE PROVIDED WITH MEANS TO COMPLY WITH SECTION M1602 OF THE FBCR CODE 2020 7TH EDITION.

4.) IAW NEC 2017- 210.12-ALL 15A OR 20A, 120V BRANCH CIRCUITS SUPPLYING OUTLETS OR DEVICES IN THE FOLLOWING LOCATIONS REQUIRE AFCI PROTECTION- KITCHEN, FAMILY RMS, DINING RMS, LIVING RMS, PARLORS, LIBRARIES, BEDROOMS, DENS, CLOSETS, SUNROOMS, RECREATION RMS, HALLWAYS OR SIMILAR AREAS SHALL BE PROTECTED BY A LISTED AFCI DEVICE OF THE COMBINATION TYPE.

5.) IAW NEC 2017- 406.12, ALL 15A AND 20A, 125V RECEPTACLES SHALL BE LISTED AS TAMPER RESISTANT.
6.) ALL OUTLETS IN BATHROOMS AND LAUNDRY ROOM SHALL BE GFCI

7.) SMOKE ALARMS SHALL BE IN ALL SLEEPING AREAS, SHALL BE INTERCONNECTED, SHALL BE WITHIN 1' TO 3' OF PEAK & SHALL BE 3' FROM THE SUPPLY OR RETURN AIR- STREAM & EQUIPPED W/ A BATTERY BACKUP. ALARMS MAY NOT BE CONNECTED WHERE ALARMS ARE WIRELESS & ALL ALARMS SOUND UPON ACTIVATION IAW FBCR R314.3 & R314.4. MODEL# TO BE USED ON THIS JOB TO BE:

BRK: SMOKE-9120B, C/O- SC9120B
KIDDE: SMOKE-21007581, C/O 21006377-N

8.) ALL WATER HEATERS HAVING AN IGNITION SOURCE TO BE ELEVATED SUCH THAT THE SOURCE OF IGNITION IS MINIMUM 18" ABOVE GARAGE FLOOR UNLESS WATER HEATER IS LISTED AS FLAMMABLE VAPOR IGNITION RESISTANT. IAW FBCR 2020, 7TH ED. P2801.7

9.) ALL EQUIPMENT & APPLIANCES, INCLUDING WATER HEATERS HAVING AN IGNITION SOURCE TO BE ELEVATED SUCH THAT THE SOURCE OF IGNITION IS MINIMUM 18" ABOVE GARAGE FLOOR UNLESS IT IS LISTED AS FLAMMABLE VAPOR IGNITION RESISTANT. IAW FBCR 2020, 7TH ED.

10.)THE MAXIMUM ALLOWABLE EXHAUST DUCT LENGTH SHALL BE DETERMINED BY ONE OF THE METHODS SPECIFIED IN SECTIONS M1502.4.5.1 THROUGH M1502.4.5.3

11.) ALL ELECTRICAL WORK TO BE DONE PER NFPA70-**NEC 2017**

12.) ADDITIONAL ELECTRODE MAY BE REQUIRED IN ACCORDANCE WITH NEC 250.53(A)(2)

12.) ALL DWELLING UNIT RECEPTACLE WILL BE IN ACCORDANCE WITH NFPA70-NEC2017 - ARTICLE 210-52

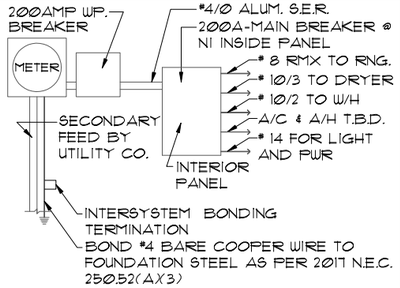

ELECTRICAL RISER DIAGRAM

NOTE: N.T.S.
ELECTRICAL MATERIALS AND INSTALLATIONS SHALL COMPLY W/ APPLICABLE PROVISIONS OF THE NATIONAL ELEC. CODE 250.52(A)(1) TO (6), LOCAL CODES, AND THE LOCAL POWER COMPANY.

250.52(A)(3) Concrete-Encased Electrode.
Concrete-encased electrodes can be horizontal or vertical and must be at least 20 ft. long.

Concrete-encased electrodes can be horizontal or vertical and must be at least 20 ft. long.

There are two types of concrete-encased electrodes: (1) steel reinforcing bars or rods which are not less than ½ inch in diameter and at least 20 ft. long, encased in 2 inches of concrete; (2) 20 ft. of bare copper conductor not smaller than No. 4 AWG encased in 2 inches of concrete.

The steel reinforcing rods must be in a location that is in direct contact with the earth. The reinforcing rods can be connected with tie wires, and a single length of rod can be used as the concrete-encased electrode. The reinforcing rods cannot be coated with non-conductive material.

Section 250.50 requires a concrete-encased electrode to be connected to the grounding electrode system if it is present. Several states have modified this requirement to say a concrete-encased electrode must be used as a grounding electrode only if it is available. In those jurisdictions, if the footings or foundations have been poured before the electrical contractor arrives at the site, and a reinforcing rod is not available for use as a grounding electrode, then a grounding connection to the reinforcing rod is not required.

NOTE: IF MORE THAN 12 SMOKE ALARMS OR CARBON MONOXIDE ALARM COMBINATION ARE INSTALLED IN THE HOME CRIME PREVENTION WILL PULL A SEPARATE FIRE PERMIT AND THE SYSTEM WILL BE MONITORED

ELECTRICAL LEGEND

	SINGLE POLE SWITCH		OUTLET, TV/CABLE
	THREE WAY SWITCH		OUTLET, PHONE
	OUTLET 110-115		INTERCOM
	OUT. 110-115, SPLIT WIRED		CHIMES
	OUT. 110-115, W/ USB		SMOKE DETECTOR
	OUT. 110-115, CLG. MOUNT.	CM	CARBON MONOXIDE
	OUT. 110-115, FLR. MOUNT.		PUSH BUTTON
	SPCL. PURPOSE 220-240		EXHAUST FAN
	LIGHT FIXT., CLG. MTD.		EX. FAN/LIGHT COMBO
	LIGHT FIXT., WALL MTD.		DISPOSAL
	LIGHT FIXT., RECESSED		ELECTRICAL PANEL
E	LIGHT FIXT., REC. ADJUST.		CEILING FAN, PREWIRE
PC	LIGHT FIXT., PULL CHAIN	F	CEILING FAN, INSTALL
	LIGHT FIXT.,FLUORESCENT	J	ELECT. JUNCTION BOX
	LIGHT FIXT., EXT. FLOODS		THERMOSTAT
EXIT	LIGHT FIXT., EMERG. EXIT		DISCONNECT SWITCH
	LIGHT FIXT., EXIT/BACKUP		ELEC. POWER METER

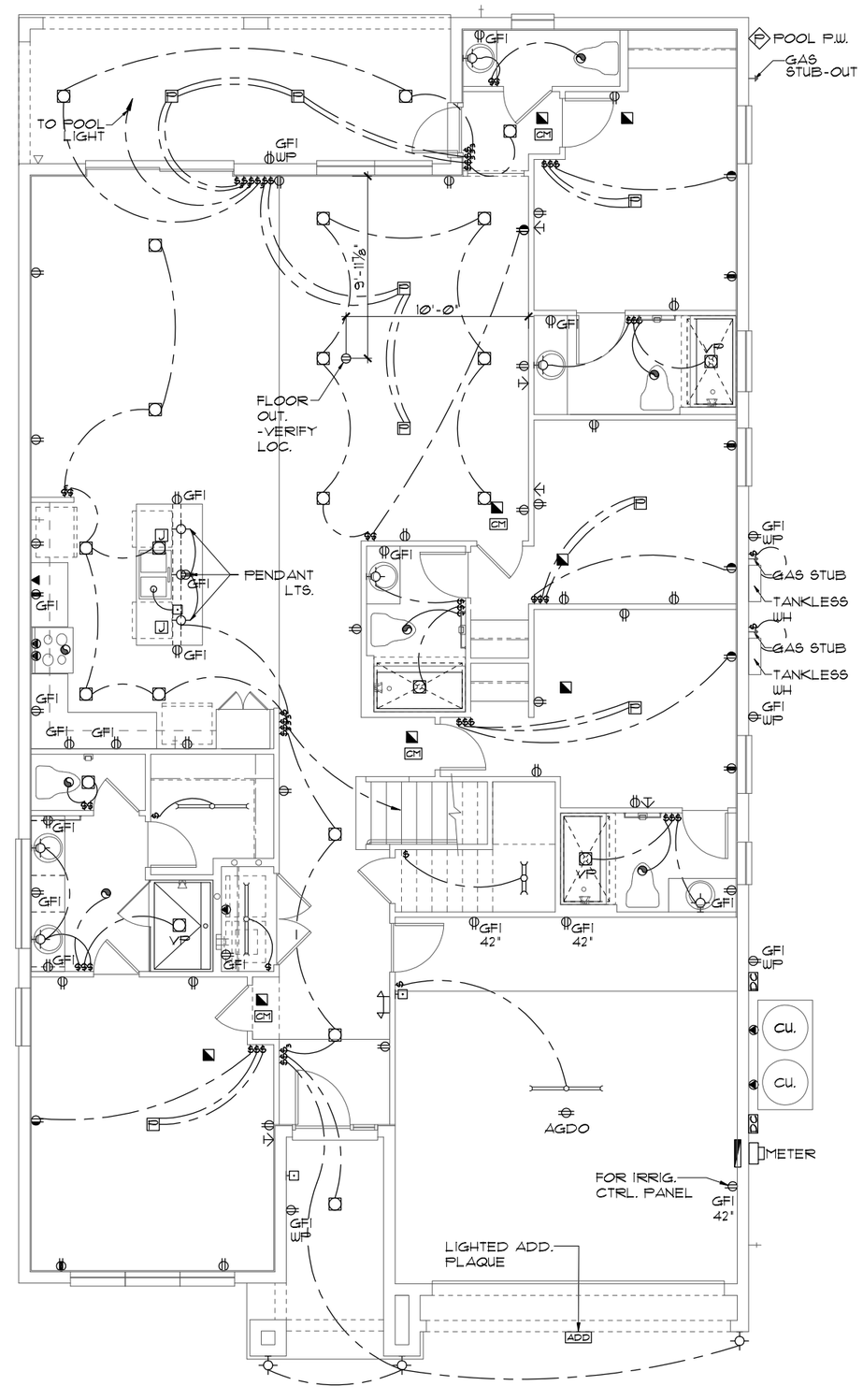

ELECTRICAL PLAN "B"

1/8"=1'-0" (11X17) 1/4"=1'-0" (22X34)

THIS STRUCTURE IS DESIGNED TO WITHSTAND 140 MPH WINDS PER THE 7th EDITION, 2020 OF THE FLORIDA BUILDING CODE RESIDENTIAL AND IS CERTIFIED AS SUCH

LOT: 0000, PARADISO GRANDE

© COPYRIGHT 2015
Park Square Homes hereby reserves its common law copyrights and other copyrights in these plans, ideas, and design. These plans, ideas and designs are not to be copied or changed in any manner or form whatsoever, nor are they to be assigned to any third party without first obtaining the express written permission from Park Square Homes.

PARADISO GRANDE

REVISIONS	BY
06-25-21	DH

Engineering By:
DBE and C
MICHAEL A. THOMPSON
PE 47509
PHONE 407-721-2292

A DIVISION OF PARK SQUARE ENTERPRISES, INC.
5200 Vineland Road, Suite 200
Orlando, Florida 32811
Phone: (407) 529 - 3000

Park Square HOMES

ELECTRICAL PLAN

SANDALWOOD
PARADISO GRANDE

4842

DATE	04-09-21
SCALE	AS NOTED
DRAWN	RDC
JOB	4842
SHEET	09B.0
OF	00 SHEETS

MECHANICAL/GENERAL NOTES

PER 7TH ED. 2020 FLA BLD. CODE-RESIDENTIAL

1.) COMPLETE DUCT DESIGN W/ SIZES & R-VALUE COMPLYING W/ THE FLORIDA ENERGY EFFICIENCY CODE FOR BUILDING CONSTRUCTION 610.1 ABC.1

2.)APPLIANCES SHALL BE ACESSIBLE FOR INSPECTION, SERVICE, REPAIR AND REPLACEMENT WITHOUT REMOVING PERMANENT CONSTRUCTION.
A.) CHAPTER 13 OF THE FBC-R 2020 7TH SECTION M1305.1

3.) AIR CONDITIONING SYSTEM SHALL BE COMPLETELY BALANCED. ALL ROOMS ISOLATED FROM THE RETURN AIR SHALL BE PROVIDED WITH MEANS TO COMPLY WITH SECTION M1602 OF THE FBCR CODE 2020 7TH EDITION.

4.) IAW NEC 2017- 210.12-ALL 15A OR 20A, 120V BRANCH CIRCUITS SUPPLYING OUTLETS OR DEVICES IN THE FOLLOWING LOCATIONS REQUIRE AFCI PROTECTION- KITCHEN, FAMILY RMS, DINING RMS, LIVING RMS, PARLORS, LIBRARIES, BEDROOMS, DENS, CLOSETS, SUNROOMS, RECREATION RMS, HALLWAYS OR SIMILAR AREAS SHALL BE PROTECTED BY A LISTED AFCI DEVICE OF THE COMBINATION TYPE.

5.) IAW NEC 2017- 406.12, ALL 15A AND 20A, 125V RECEPTACLES SHALL BE LISTED AS TAMPER RESISTANT.
6.) ALL OUTLETS IN BATHROOMS AND LAUNDRY ROOM SHALL BE GFCI

7.) SMOKE ALARMS SHALL BE IN ALL SLEEPING AREAS, SHALL BE INTERCONNECTED, SHALL BE WITHIN 1' TO 3' OF PEAK & SHALL BE 3' FROM THE SUPPLY OR RETURN AIR- STREAM & EQUIPPED W/ A BATTERY BACKUP. ALARMS MAY NOT BE CONNECTED WHERE ALARMS ARE WIRELESS & ALL ALARMS SOUND UPON ACTIVATION IAW FBCR R314.3 & R314.4. MODEL# TO BE USED ON THIS JOB TO BE:

BRK: SMOKE-9120B, C/O- SC9120B
KIDDE: SMOKE-21007581, C/O 21006377-N

8.) ALL WATER HEATERS HAVING AN IGNITION SOURCE TO BE ELEVATED SUCH THAT THE SOURCE OF IGNITION IS MINIMUM 18" ABOVE GARAGE FLOOR UNLESS WATER HEATER IS LISTED AS FLAMMABLE VAPOR IGNITION RESISTANT. IAW FBCR 2020, 7TH ED. P2801.7

9.) ALL EQUIPMENT & APPLIANCES, INCLUDING WATER HEATERS HAVING AN IGNITION SOURCE TO BE ELEVATED SUCH THAT THE SOURCE OF IGNITION IS MINIMUM 18" ABOVE GARAGE FLOOR UNLESS IT IS LISTED AS FLAMMABLE VAPOR IGNITION RESISTANT. IAW FBCR 2020, 7TH ED.

10.)THE MAXIMUM ALLOWABLE EXHAUST DUCT LENGTH SHALL BE DETERMINED BY ONE OF THE METHODS SPECIFIED IN SECTIONS M1502.4.5.1 THROUGH M1502.4.5.3

11.) ALL ELECTRICAL WORK TO BE DONE PER NFPA70-**NEC 2017**

12.) ADDITIONAL ELECTRODE MAY BE REQUIRED IN ACCORDANCE WITH NEC 250.53(A)(2)

12.) ALL DWELLING UNIT RECEPTACLE WILL BE IN ACCORDANCE WITH NFPA70-NEC2017 - ARTICLE 210-52

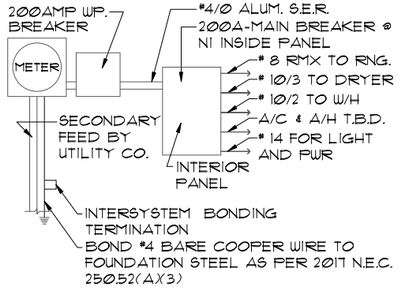

ELECTRICAL RISER DIAGRAM

NOTE: N.T.S.
ELECTRICAL MATERIALS AND INSTALLATIONS SHALL COMPLY W/ APPLICABLE PROVISIONS OF THE NATIONAL ELEC. CODE 250.52(A)(1) TO (6), LOCAL CODES, AND THE LOCAL POWER COMPANY.

250.52(A)(3) Concrete-Encased Electrode.
Concrete-encased electrodes can be horizontal or vertical and must be at least 20 ft. long.

Concrete-encased electrodes can be horizontal or vertical and must be at least 20 ft. long.

There are two types of concrete-encased electrodes: (1) steel reinforcing bars or rods which are not less than ½ inch in diameter and at least 20 ft. long, encased in 2 inches of concrete; (2) 20 ft. of bare copper conductor not smaller than No. 4 AWG encased in 2 inches of concrete.

The steel reinforcing rods must be in a location that is in direct contact with the earth. The reinforcing rods can be connected with tie wires, and a single length of rod can be used as the concrete-encased electrode. The reinforcing rods cannot be coated with non-conductive material.

Section 250.50 requires a concrete-encased electrode to be connected to the grounding electrode system if it is present. Several states have modified this requirement to say a concrete-encased electrode must be used as a grounding electrode only if it is available. In those jurisdictions, if the footings or foundations have been poured before the electrical contractor arrives at the site, and a reinforcing rod is not available for use as a grounding electrode, then a grounding connection to the reinforcing rod is not required.

NOTE: IF MORE THAN 12 SMOKE ALARMS OR CARBON MONOXIDE ALARM COMBINATION ARE INSTALLED IN THE HOME CRIME PREVENTION WILL PULL A SEPARATE FIRE PERMIT AND THE SYSTEM WILL BE MONITORED

ELECTRICAL LEGEND

	SINGLE POLE SWITCH		OUTLET, TV/CABLE
	THREE WAY SWITCH		OUTLET, PHONE
	OUTLET 110-115		INTERCOM
	OUT. 110-115, SPLIT WIRED		CHIMES
	OUT. 110-115, W/ USB		SMOKE DETECTOR
	OUT. 110-115, CLG. MOUNT.	CM	CARBON MONOXIDE
	OUT. 110-115, FLR. MOUNT.		PUSH BUTTON
	SPCL. PURPOSE 220-240		EXHAUST FAN
	LIGHT FIXT., CLG. MTD.		EX. FAN/LIGHT COMBO
	LIGHT FIXT., WALL MTD.		DISPOSAL
	LIGHT FIXT., RECESSED		ELECTRICAL PANEL
E	LIGHT FIXT., REC. ADJUST.	F	CEILING FAN, PREWIRE
PC	LIGHT FIXT., PULL CHAIN	F	CEILING FAN, INSTALL
	LIGHT FIXT.,FLUORESCENT	J	ELECT. JUNCTION BOX
	LIGHT FIXT., EXT. FLOODS		THERMOSTAT
EXIT	LIGHT FIXT., EMERG. EXIT	DC	DISCONNECT SWITCH
	LIGHT FIXT., EXIT/BACKUP		ELEC. POWER METER

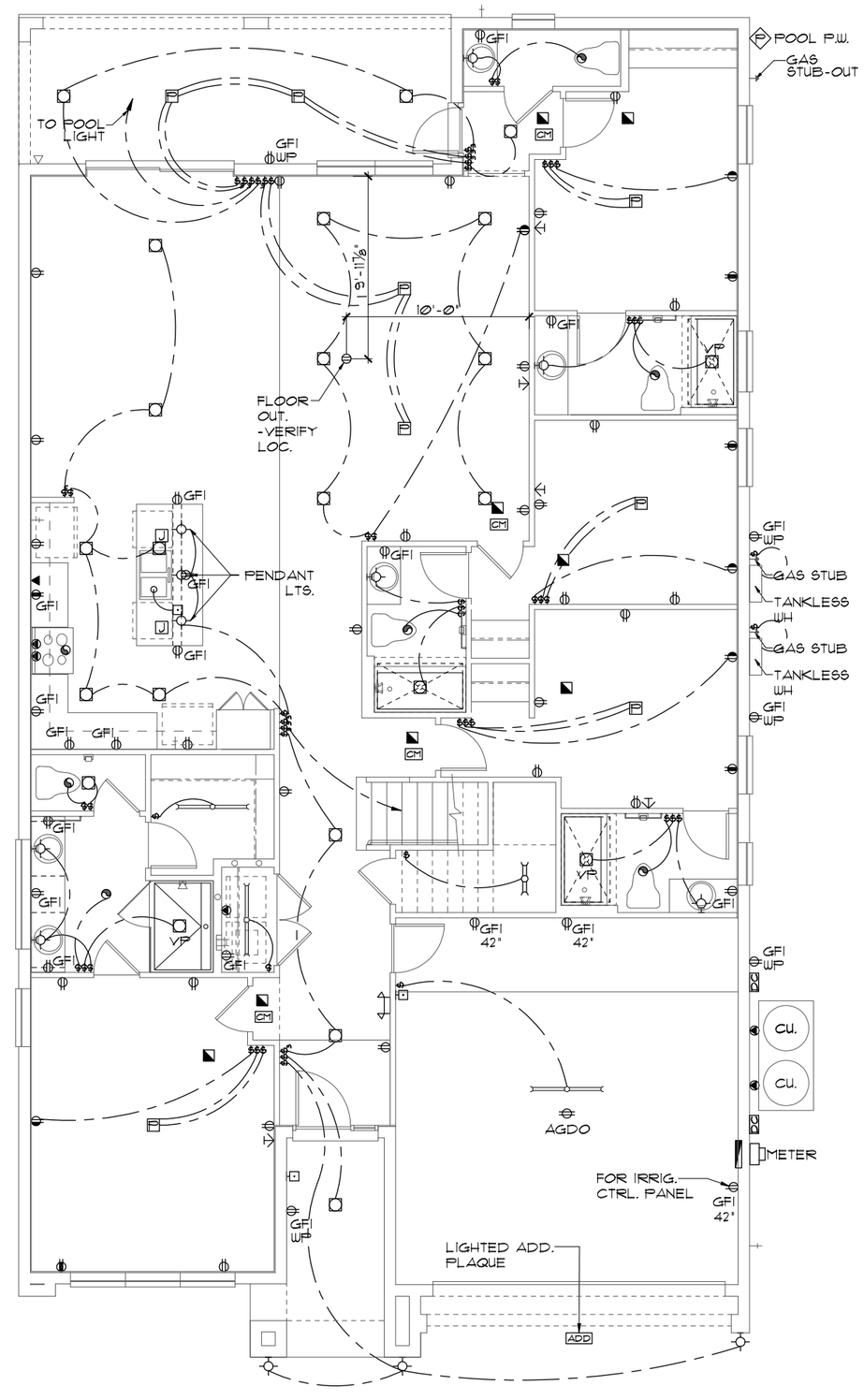

ELECTRICAL PLAN "C"

1/8"=1'-0" (11X17) 1/4"=1'-0" (22X34)

THIS STRUCTURE IS DESIGNED TO WITHSTAND 140 MPH WINDS PER THE 7th EDITION, 2020 OF THE FLORIDA BUILDING CODE RESIDENTIAL AND IS CERTIFIED AS SUCH

LOT: 0000, PARADISO GRANDE

© COPYRIGHT 2015
Park Square Homes hereby reserves its common law copyrights and other copyrights in these plans, ideas, and design. These plans, ideas and designs are not to be copied or changed in any manner or form whatsoever, nor are they to be assigned to any third party without first obtaining the express written permission from Park Square Homes.

PARADISO GRANDE

REVISIONS	BY
06-25-21	DH

Engineering By:
DBE and C
MICHAEL A. THOMPSON
PE 47509
PHONE 407-721-2292

A DIVISION OF PARK SQUARE ENTERPRISES, INC.
5200 Vineland Road, Suite 200
Orlando, Florida 32811
Phone: (407) 529 - 3000

Park Square HOMES

ELECTRICAL PLAN

SANDALWOOD
PARADISO GRANDE

4842

DATE	04-09-21
SCALE	AS NOTED
DRAWN	RDC
JOB	4842
SHEET	09C.0
OF	00 SHEETS

MECHANICAL/GENERAL NOTES

PER 7TH ED. 2020 FLA BLD. CODE-RESIDENTIAL

1.) COMPLETE DUCT DESIGN W/ SIZES & R-VALUE COMPLYING W/ THE FLORIDA ENERGY EFFICIENCY CODE FOR BUILDING CONSTRUCTION 610.1 ABC.1

2.)APPLIANCES SHALL BE ACESSIBLE FOR INSPECTION, SERVICE, REPAIR AND REPLACEMENT WITHOUT REMOVING PERMANENT CONSTRUCTION.
A.) CHAPTER 13 OF THE FBC-R 2020 7TH SECTION M1305.1

3.) AIR CONDITIONING SYSTEM SHALL BE COMPLETELY BALANCED. ALL ROOMS ISOLATED FROM THE RETURN AIR SHALL BE PROVIDED WITH MEANS TO COMPLY WITH SECTION M1602 OF THE FBCR CODE 2020 7TH EDITION.

4.) IAW NEC 2017- 210.12-ALL 15A OR 20A, 120V BRANCH CIRCUITS SUPPLYING OUTLETS OR DEVICES IN THE FOLLOWING LOCATIONS REQUIRE AFCI PROTECTION- KITCHEN, FAMILY RMS, DINING RMS, LIVING RMS, PARLORS, LIBRARIES, BEDROOMS, DENS, CLOSETS, SUNROOMS, RECREATION RMS, HALLWAYS OR SIMILAR AREAS SHALL BE PROTECTED BY A LISTED AFCI DEVICE OF THE COMBINATION TYPE.

5.) IAW NEC 2017- 406.12, ALL 15A AND 20A, 125V RECEPTACLES SHALL BE LISTED AS TAMPER RESISTANT.
6.) ALL OUTLETS IN BATHROOMS AND LAUNDRY ROOM SHALL BE GFCI

7.) SMOKE ALARMS SHALL BE IN ALL SLEEPING AREAS, SHALL BE INTERCONNECTED, SHALL BE WITHIN 1' TO 3' OF PEAK & SHALL BE 3' FROM THE SUPPLY OR RETURN AIR- STREAM & EQUIPPED W/ A BATTERY BACKUP. ALARMS MAY NOT BE CONNECTED WHERE ALARMS ARE WIRELESS & ALL ALARMS SOUND UPON ACTIVATION IAW FBCR R314.3 & R314.4. MODEL# TO BE USED ON THIS JOB TO BE:
BRK: SMOKE-9120B, C/O- SC9120B
KIDDE: SMOKE-21007581, C/O 21006377-N

8.) ALL WATER HEATERS HAVING AN IGNITION SOURCE TO BE ELEVATED SUCH THAT THE SOURCE OF IGNITION IS MINIMUM 18" ABOVE GARAGE FLOOR UNLESS WATER HEATER IS LISTED AS FLAMMABLE VAPOR IGNITION RESISTANT. IAW FBCR 2020, 7TH ED. P2801.7

9.) ALL EQUIPMENT & APPLIANCES, INCLUDING WATER HEATERS HAVING AN IGNITION SOURCE TO BE ELEVATED SUCH THAT THE SOURCE OF IGNITION IS MINIMUM 18" ABOVE GARAGE FLOOR UNLESS IT IS LISTED AS FLAMMABLE VAPOR IGNITION RESISTANT. IAW FBCR 2020, 7TH ED.

10.)THE MAXIMUM ALLOWABLE EXHAUST DUCT LENGTH SHALL BE DETERMINED BY ONE OF THE METHODS SPECIFIED IN SECTIONS M1502.4.5.1 THROUGH M1502.4.5.3

11.) ALL ELECTRICAL WORK TO BE DONE PER NFPA70-**NEC 2017**

12.) ADDITIONAL ELECTRODE MAY BE REQUIRED IN ACCORDANCE WITH NEC 250.53(A)(2)

12.) ALL DWELLING UNIT RECEPTACLE WILL BE IN ACCORDANCE WITH NFPA70-NEC2017 - ARTICLE 210-52

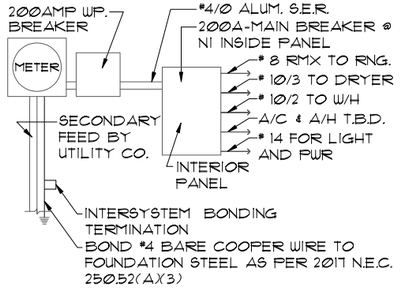

ELECTRICAL RISER DIAGRAM

NOTE: N.T.S.
ELECTRICAL MATERIALS AND INSTALLATIONS SHALL COMPLY W/ APPLICABLE PROVISIONS OF THE NATIONAL ELEC. CODE 250.52(A)(1) TO (6), LOCAL CODES, AND THE LOCAL POWER COMPANY.

250.52(A)(3) Concrete-Encased Electrode.
Concrete-encased electrodes can be horizontal or vertical and must be at least 20 ft. long.

Concrete-encased electrodes can be horizontal or vertical and must be at least 20 ft. long.

There are two types of concrete-encased electrodes: (1) steel reinforcing bars or rods which are not less than ½ inch in diameter and at least 20 ft. long, encased in 2 inches of concrete; (2) 20 ft. of bare copper conductor not smaller than No. 4 AWG encased in 2 inches of concrete.

The steel reinforcing rods must be in a location that is in direct contact with the earth. The reinforcing rods can be connected with tie wires, and a single length of rod can be used as the concrete-encased electrode. The reinforcing rods cannot be coated with non-conductive material.

Section 250.50 requires a concrete-encased electrode to be connected to the grounding electrode system if it is present. Several states have modified this requirement to say a concrete-encased electrode must be used as a grounding electrode only if it is available. In those jurisdictions, if the footings or foundations have been poured before the electrical contractor arrives at the site, and a reinforcing rod is not available for use as a grounding electrode, then a grounding connection to the reinforcing rod is not required.

NOTE: IF MORE THAN 12 SMOKE ALARMS OR CARBON MONOXIDE ALARM COMBINATION ARE INSTALLED IN THE HOME CRIME PREVENTION WILL PULL A SEPARATE FIRE PERMIT AND THE SYSTEM WILL BE MONITORED

ELECTRICAL LEGEND

	SINGLE POLE SWITCH		OUTLET, TV/CABLE
	THREE WAY SWITCH		OUTLET, PHONE
	OUTLET 110-115		INTERCOM
	OUT. 110-115, SPLIT WIRED		CHIMES
	OUT. 110-115, W/ USB		SMOKE DETECTOR
	OUT. 110-115, CLG. MOUNT.	CM	CARBON MONOXIDE
	OUT. 110-115, FLR. MOUNT.		PUSH BUTTON
	SPCL. PURPOSE 220-240		EXHAUST FAN
	LIGHT FIXT., CLG. MTD.		EX. FAN/LIGHT COMBO
	LIGHT FIXT., WALL MTD.		DISPOSAL
	LIGHT FIXT., RECESSED		ELECTRICAL PANEL
E	LIGHT FIXT., REC. ADJUST.		CEILING FAN, PREWIRE
PC	LIGHT FIXT., PULL CHAIN	F	CEILING FAN, INSTALL
	LIGHT FIXT.,FLUORESCENT	J	ELECT. JUNCTION BOX
	LIGHT FIXT., EXT. FLOODS		THERMOSTAT
EXIT	LIGHT FIXT., EMERG. EXIT	DC	DISCONNECT SWITCH
	LIGHT FIXT., EXIT/BACKUP		ELEC. POWER METER

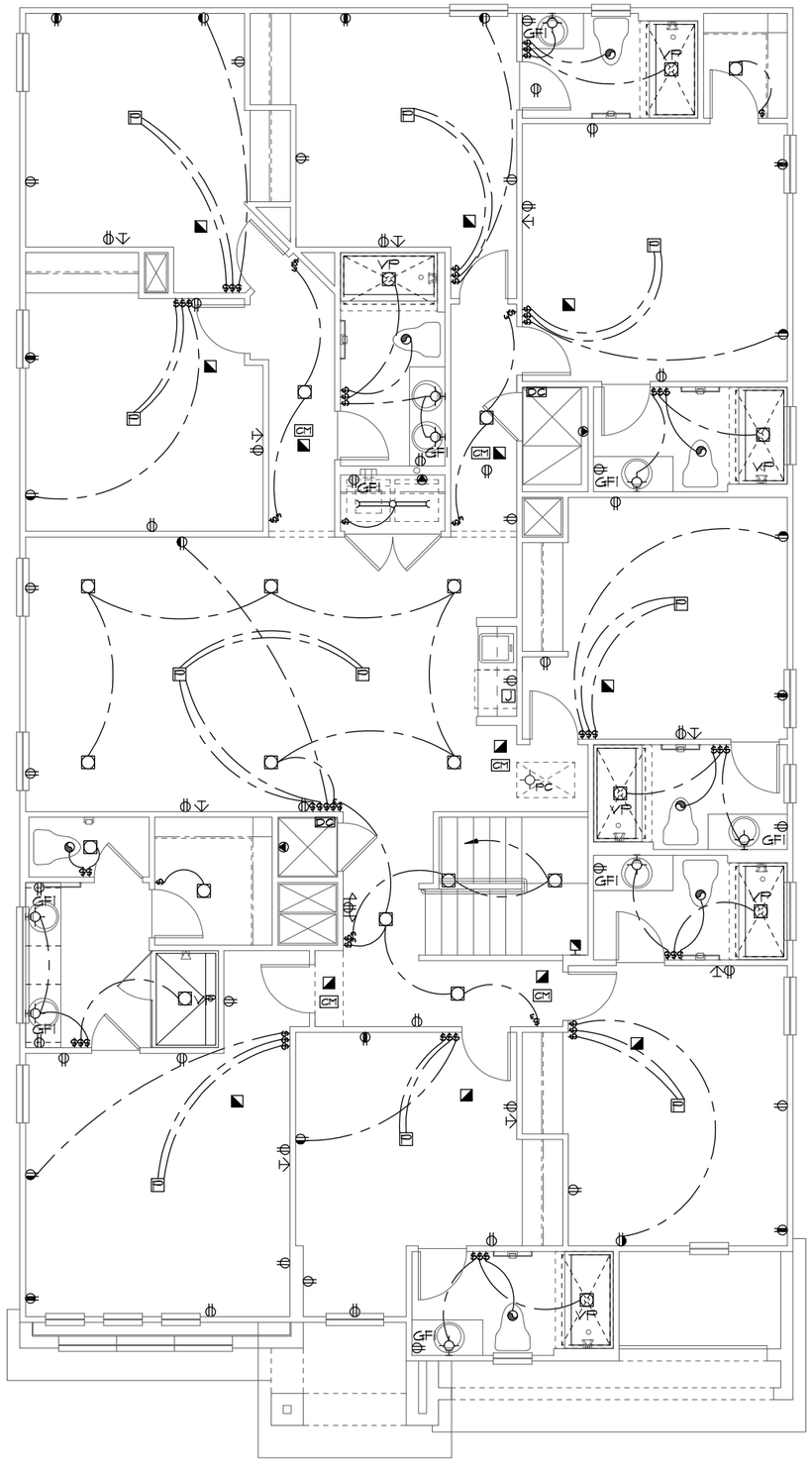

UPPER ELECTRICAL PLAN "A"

1/8"=1'-0" (11X17) 1/4"=1'-0" (22X34)

THIS STRUCTURE IS DESIGNED TO WITHSTAND 140 MPH WINDS PER THE 7th EDITION, 2020 OF THE FLORIDA BUILDING CODE RESIDENTIAL AND IS CERTIFIED AS SUCH

LOT: 0000, PARADISO GRANDE

© COPYRIGHT 2015
Park Square Homes hereby reserves its common law copyrights and other copyrights in these plans, ideas, and design. These plans, ideas and designs are not to be copied or changed in any manner or form whatsoever, nor are they to be assigned to any third party without first obtaining the express written permission from Park Square Homes.

PARADISO GRANDE

REVISIONS	BY
06-25-21	DH

Engineering By:
DBE and C
MICHAEL A. THOMPSON
PE 47509
PHONE 407-721-2292

A DIVISION OF PARK SQUARE ENTERPRISES, INC.
5200 Vineland Road, Suite 200
Orlando, Florida 32811
Phone: (407) 529 - 3000

Park Square HOMES

UPPER ELECTRICAL PLAN

SANDALWOOD
PARADISO GRANDE

4842

DATE	04-09-21
SCALE	AS NOTED
DRAWN	RDC
JOB	4842
SHEET	10A.0
OF	00 SHEETS

MECHANICAL/GENERAL NOTES

PER 7TH ED. 2020 FLA BLD. CODE-RESIDENTIAL

1.) COMPLETE DUCT DESIGN W/ SIZES & R-VALUE COMPLYING W/ THE FLORIDA ENERGY EFFICIENCY CODE FOR BUILDING CONSTRUCTION 610.1 ABC.1

2.)APPLIANCES SHALL BE ACESSIBLE FOR INSPECTION, SERVICE, REPAIR AND REPLACEMENT WITHOUT REMOVING PERMANENT CONSTRUCTION.
A.) CHAPTER 13 OF THE FBC-R 2020 7TH SECTION M1305.1

3.) AIR CONDITIONING SYSTEM SHALL BE COMPLETELY BALANCED. ALL ROOMS ISOLATED FROM THE RETURN AIR SHALL BE PROVIDED WITH MEANS TO COMPLY WITH SECTION M1602 OF THE FBCR CODE 2020 7TH EDITION.

4.) IAW NEC 2017- 210.12-ALL 15A OR 20A, 120V BRANCH CIRCUITS SUPPLYING OUTLETS OR DEVICES IN THE FOLLOWING LOCATIONS REQUIRE AFCI PROTECTION- KITCHEN, FAMILY RMS, DINING RMS, LIVING RMS, PARLORS, LIBRARIES, BEDROOMS, DENS, CLOSETS, SUNROOMS, RECREATION RMS, HALLWAYS OR SIMILAR AREAS SHALL BE PROTECTED BY A LISTED AFCI DEVICE OF THE COMBINATION TYPE.

5.) IAW NEC 2017- 406.12, ALL 15A AND 20A, 125V RECEPTACLES SHALL BE LISTED AS TAMPER RESISTANT.
6.) ALL OUTLETS IN BATHROOMS AND LAUNDRY ROOM SHALL BE GFCI

7.) SMOKE ALARMS SHALL BE IN ALL SLEEPING AREAS, SHALL BE INTERCONNECTED, SHALL BE WITHIN 1' TO 3' OF PEAK & SHALL BE 3' FROM THE SUPPLY OR RETURN AIR- STREAM & EQUIPPED W/ A BATTERY BACKUP. ALARMS MAY NOT BE CONNECTED WHERE ALARMS ARE WIRELESS & ALL ALARMS SOUND UPON ACTIVATION IAW FBCR R314.3 & R314.4. MODEL# TO BE USED ON THIS JOB TO BE:
BRK: SMOKE-9120B, C/O- SC9120B
KIDDE: SMOKE-21007581, C/O 21006377-N

8.) ALL WATER HEATERS HAVING AN IGNITION SOURCE TO BE ELEVATED SUCH THAT THE SOURCE OF IGNITION IS MINIMUM 18" ABOVE GARAGE FLOOR UNLESS WATER HEATER IS LISTED AS FLAMMABLE VAPOR IGNITION RESISTANT. IAW FBCR 2020, 7TH ED. P2801.7

9.) ALL EQUIPMENT & APPLIANCES, INCLUDING WATER HEATERS HAVING AN IGNITION SOURCE TO BE ELEVATED SUCH THAT THE SOURCE OF IGNITION IS MINIMUM 18" ABOVE GARAGE FLOOR UNLESS IT IS LISTED AS FLAMMABLE VAPOR IGNITION RESISTANT. IAW FBCR 2020, 7TH ED.

10.)THE MAXIMUM ALLOWABLE EXHAUST DUCT LENGTH SHALL BE DETERMINED BY ONE OF THE METHODS SPECIFIED IN SECTIONS M1502.4.5.1 THROUGH M1502.4.5.3

11.) ALL ELECTRICAL WORK TO BE DONE PER NFPA70-**NEC 2017**

12.) ADDITIONAL ELECTRODE MAY BE REQUIRED IN ACCORDANCE WITH NEC 250.53(A)(2)

12.) ALL DWELLING UNIT RECEPTACLE WILL BE IN ACCORDANCE WITH NFPA70-NEC2017 - ARTICLE 210-52

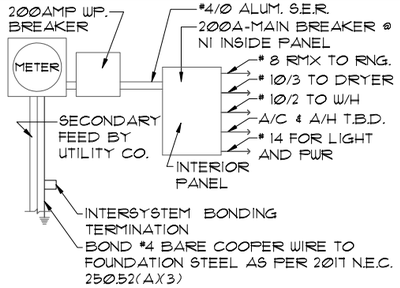

ELECTRICAL RISER DIAGRAM

NOTE: N.T.S.
ELECTRICAL MATERIALS AND INSTALLATIONS SHALL COMPLY W/ APPLICABLE PROVISIONS OF THE NATIONAL ELEC. CODE 250.52(A)(1) TO (6), LOCAL CODES, AND THE LOCAL POWER COMPANY.

250.52(A)(3) Concrete-Encased Electrode.
Concrete-encased electrodes can be horizontal or vertical and must be at least 20 ft. long.

Concrete-encased electrodes can be horizontal or vertical and must be at least 20 ft. long.

There are two types of concrete-encased electrodes: (1) steel reinforcing bars or rods which are not less than ½ inch in diameter and at least 20 ft. long, encased in 2 inches of concrete; (2) 20 ft. of bare copper conductor not smaller than No. 4 AWG encased in 2 inches of concrete.

The steel reinforcing rods must be in a location that is in direct contact with the earth. The reinforcing rods can be connected with tie wires, and a single length of rod can be used as the concrete-encased electrode. The reinforcing rods cannot be coated with non-conductive material.

Section 250.50 requires a concrete-encased electrode to be connected to the grounding electrode system if it is present. Several states have modified this requirement to say a concrete-encased electrode must be used as a grounding electrode only if it is available. In those jurisdictions, if the footings or foundations have been poured before the electrical contractor arrives at the site, and a reinforcing rod is not available for use as a grounding electrode, then a grounding connection to the reinforcing rod is not required.

NOTE: IF MORE THAN 12 SMOKE ALARMS OR CARBON MONOXIDE ALARM COMBINATION ARE INSTALLED IN THE HOME CRIME PREVENTION WILL PULL A SEPARATE FIRE PERMIT AND THE SYSTEM WILL BE MONITORED

ELECTRICAL LEGEND

	SINGLE POLE SWITCH		OUTLET, TV/CABLE
	THREE WAY SWITCH		OUTLET, PHONE
	OUTLET 110-115		INTERCOM
	OUT. 110-115, SPLIT WIRED		CHIMES
	OUT. 110-115, W/ USB		SMOKE DETECTOR
	OUT. 110-115, CLG. MOUNT.	CM	CARBON MONOXIDE
	OUT. 110-115, FLR. MOUNT.		PUSH BUTTON
	SPCL. PURPOSE 220-240		EXHAUST FAN
	LIGHT FIXT., CLG. MTD.		EX. FAN/LIGHT COMBO
	LIGHT FIXT., WALL MTD.		DISPOSAL
	LIGHT FIXT., RECESSED		ELECTRICAL PANEL
E	LIGHT FIXT., REC. ADJUST.		CEILING FAN, PREWIRE
PC	LIGHT FIXT., PULL CHAIN	F	CEILING FAN, INSTALL
	LIGHT FIXT.,FLUORESCENT		ELECT. JUNCTION BOX
	LIGHT FIXT., EXT. FLOODS		THERMOSTAT
EXIT	LIGHT FIXT., EMERG. EXIT	DC	DISCONNECT SWITCH
	LIGHT FIXT., EXIT/BACKUP		ELEC. POWER METER

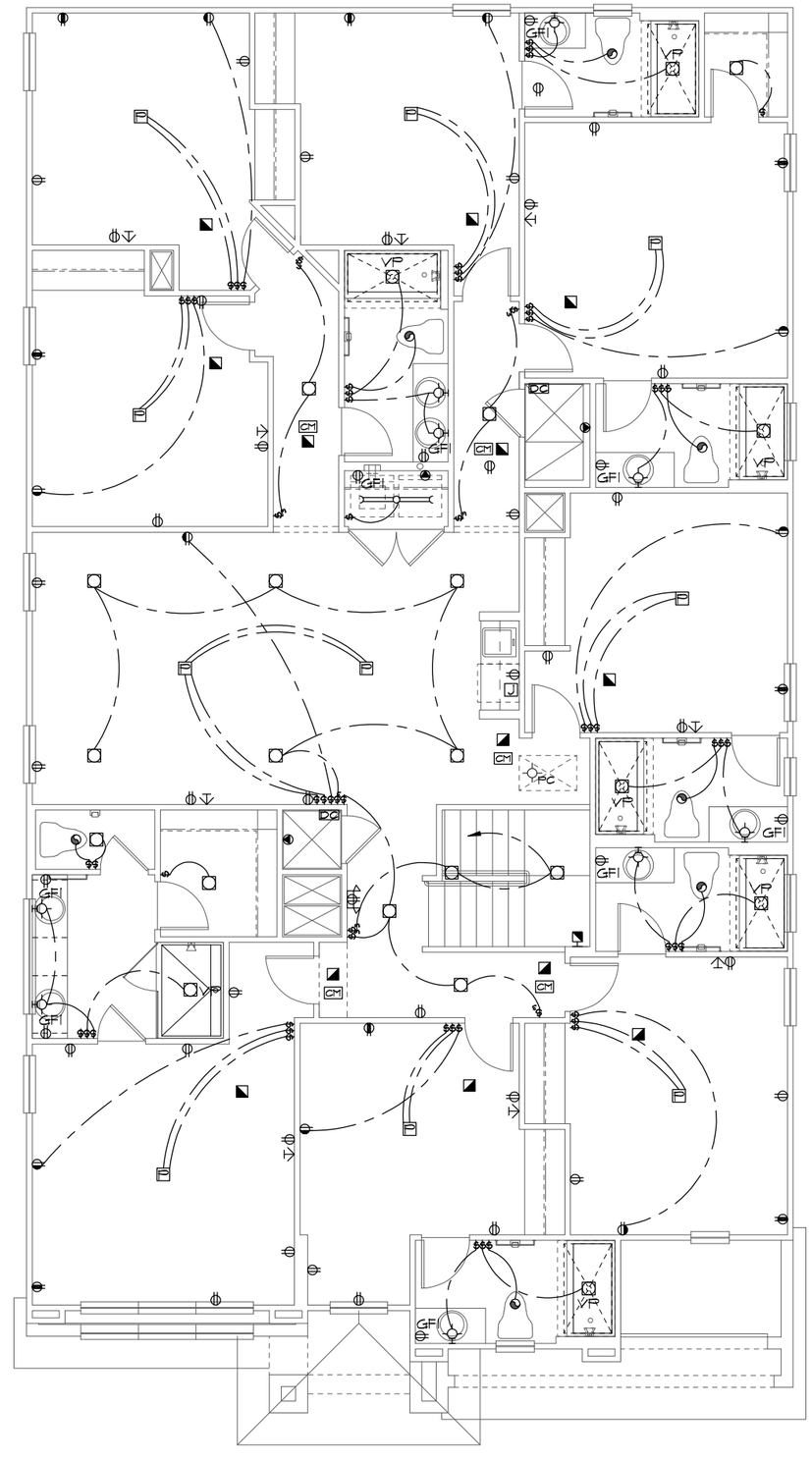

UPPER ELECTRICAL PLAN "B"

1/8"=1'-0" (11X17) 1/4"=1'-0" (22X34)

THIS STRUCTURE IS DESIGNED TO WITHSTAND 140 MPH WINDS PER THE 7th EDITION, 2020 OF THE FLORIDA BUILDING CODE RESIDENTIAL AND IS CERTIFIED AS SUCH

LOT: 0000, PARADISO GRANDE

© COPYRIGHT 2015
Park Square Homes hereby reserves its common law copyrights and other copyrights in these plans, ideas, and design. These plans, ideas and designs are not to be copied or changed in any manner or form whatsoever, nor are they to be assigned to any third party without first obtaining the express written permission from Park Square Homes.

PARADISO GRANDE

REVISIONS	BY
06-25-21	DH

Engineering By:
DBE and C
MICHAEL A. THOMPSON
PE 47509
PHONE 407-721-2292

A DIVISION OF PARK SQUARE ENTERPRISES, INC.
5200 Vineland Road, Suite 200
Orlando, Florida 32811
Phone: (407) 529 - 3000

Park Square HOMES

UPPER ELECTRICAL PLAN

SANDALWOOD

PARADISO GRANDE

4842

DATE	04-09-21
SCALE	AS NOTED
DRAWN	RDC
JOB	4842
SHEET	10B.0
OF	00 SHEETS

MECHANICAL/GENERAL NOTES

PER 7TH ED. 2020 FLA BLD. CODE-RESIDENTIAL

1.) COMPLETE DUCT DESIGN W/ SIZES & R-VALUE COMPLYING W/ THE FLORIDA ENERGY EFFICIENCY CODE FOR BUILDING CONSTRUCTION 610.1 ABC.1

2.)APPLIANCES SHALL BE ACESSIBLE FOR INSPECTION, SERVICE, REPAIR AND REPLACEMENT WITHOUT REMOVING PERMANENT CONSTRUCTION.
A) CHAPTER 13 OF THE FBC-R 2020 7TH SECTION M1305.1

3.) AIR CONDITIONING SYSTEM SHALL BE COMPLETELY BALANCED. ALL ROOMS ISOLATED FROM THE RETURN AIR SHALL BE PROVIDED WITH MEANS TO COMPLY WITH SECTION M1602 OF THE FBCR CODE 2020 7TH EDITION.

4.) IAW NEC 2017- 210.12-ALL 15A OR 20A, 120V BRANCH CIRCUITS SUPPLYING OUTLETS OR DEVICES IN THE FOLLOWING LOCATIONS REQUIRE AFCI PROTECTION- KITCHEN, FAMILY RMS, DINING RMS, LIVING RMS, PARLORS, LIBRARIES, BEDROOMS, DENS, CLOSETS, SUNROOMS, RECREATION RMS, HALLWAYS OR SIMILAR AREAS SHALL BE PROTECTED BY A LISTED AFCI DEVICE OF THE COMBINATION TYPE.

5.) IAW NEC 2017- 406.12, ALL 15A AND 20A, 125V RECEPTACLES SHALL BE LISTED AS TAMPER RESISTANT.
6.) ALL OUTLETS IN BATHROOMS AND LAUNDRY ROOM SHALL BE GFCI

7.) SMOKE ALARMS SHALL BE IN ALL SLEEPING AREAS, SHALL BE INTERCONNECTED, SHALL BE WITHIN 1' TO 3' OF PEAK & SHALL BE 3' FROM THE SUPPLY OR RETURN AIR- STREAM & EQUIPPED W/ A BATTERY BACKUP. ALARMS MAY NOT BE CONNECTED WHERE ALARMS ARE WIRELESS & ALL ALARMS SOUND UPON ACTIVATION IAW FBCR R314.3 & R314.4. MODEL# TO BE USED ON THIS JOB TO BE:
BRK: SMOKE-9120B, C/O- SC9120B
KIDDE: SMOKE-21007581, C/O 21006377-N

8.) ALL WATER HEATERS HAVING AN IGNITION SOURCE TO BE ELEVATED SUCH THAT THE SOURCE OF IGNITION IS MINIMUM 18" ABOVE GARAGE FLOOR UNLESS WATER HEATER IS LISTED AS FLAMMABLE VAPOR IGNITION RESISTANT. IAW FBCR 2020, 7TH ED. P2801.7

9.) ALL EQUIPMENT & APPLIANCES, INCLUDING WATER HEATERS HAVING AN IGNITION SOURCE TO BE ELEVATED SUCH THAT THE SOURCE OF IGNITION IS MINIMUM 18" ABOVE GARAGE FLOOR UNLESS IT IS LISTED AS FLAMMABLE VAPOR IGNITION RESISTANT. IAW FBCR 2020, 7TH ED.

10.)THE MAXIMUM ALLOWABLE EXHAUST DUCT LENGTH SHALL BE DETERMINED BY ONE OF THE METHODS SPECIFIED IN SECTIONS M1502.4.5.1 THROUGH M1502.4.5.3

11.) ALL ELECTRICAL WORK TO BE DONE PER NFPA70-**NEC 2017**

12.) ADDITIONAL ELECTRODE MAY BE REQUIRED IN ACCORDANCE WITH NEC 250.53(A)(2)

12.) ALL DWELLING UNIT RECEPTACLE WILL BE IN ACCORDANCE WITH NFPA70-NEC2017 - ARTICLE 210-52

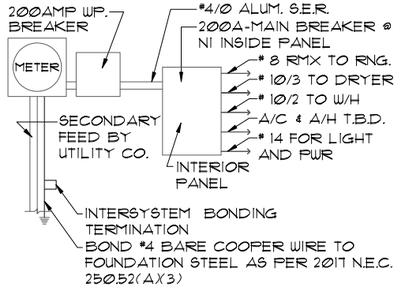

ELECTRICAL RISER DIAGRAM

NOTE: N.T.S.
ELECTRICAL MATERIALS AND INSTALLATIONS SHALL COMPLY W/ APPLICABLE PROVISIONS OF THE NATIONAL ELEC. CODE 250.52(A)(1) TO (6), LOCAL CODES, AND THE LOCAL POWER COMPANY.

250.52(A)(3) Concrete-Encased Electrode.
Concrete-encased electrodes can be horizontal or vertical and must be at least 20 ft. long.

Concrete-encased electrodes can be horizontal or vertical and must be at least 20 ft. long.

There are two types of concrete-encased electrodes: (1) steel reinforcing bars or rods which are not less than ½ inch in diameter and at least 20 ft. long, encased in 2 inches of concrete; (2) 20 ft. of bare copper conductor not smaller than No. 4 AWG encased in 2 inches of concrete.

The steel reinforcing rods must be in a location that is in direct contact with the earth. The reinforcing rods can be connected with tie wires, and a single length of rod can be used as the concrete-encased electrode. The reinforcing rods cannot be coated with non-conductive material.

Section 250.50 requires a concrete-encased electrode to be connected to the grounding electrode system if it is present. Several states have modified this requirement to say a concrete-encased electrode must be used as a grounding electrode only if it is available. In those jurisdictions, if the footings or foundations have been poured before the electrical contractor arrives at the site, and a reinforcing rod is not available for use as a grounding electrode, then a grounding connection to the reinforcing rod is not required.

NOTE: IF MORE THAN 12 SMOKE ALARMS OR CARBON MONOXIDE ALARM COMBINATION ARE INSTALLED IN THE HOME CRIME PREVENTION WILL PULL A SEPARATE FIRE PERMIT AND THE SYSTEM WILL BE MONITORED

ELECTRICAL LEGEND

	SINGLE POLE SWITCH		OUTLET, TV/CABLE
	THREE WAY SWITCH		OUTLET, PHONE
	OUTLET 110-115		INTERCOM
	OUT. 110-115, SPLIT WIRED		CHIMES
	OUT. 110-115, W/ USB		SMOKE DETECTOR
	OUT. 110-115, CLG. MOUNT.	CM	CARBON MONOXIDE
	OUT. 110-115, FLR. MOUNT.		PUSH BUTTON
	SPCL. PURPOSE 220-240		EXHAUST FAN
	LIGHT FIXT., CLG. MTD.		EX. FAN/LIGHT COMBO
	LIGHT FIXT., WALL MTD.		DISPOSAL
	LIGHT FIXT., RECESSED		ELECTRICAL PANEL
E	LIGHT FIXT., REC. ADJUST.		CEILING FAN, PREWIRE
PC	LIGHT FIXT., PULL CHAIN	F	CEILING FAN, INSTALL
	LIGHT FIXT.,FLUORESCENT	J	ELECT. JUNCTION BOX
	LIGHT FIXT., EXT. FLOODS		THERMOSTAT
EXIT	LIGHT FIXT., EMERG. EXIT	DC	DISCONNECT SWITCH
	LIGHT FIXT., EXIT/BACKUP		ELEC. POWER METER

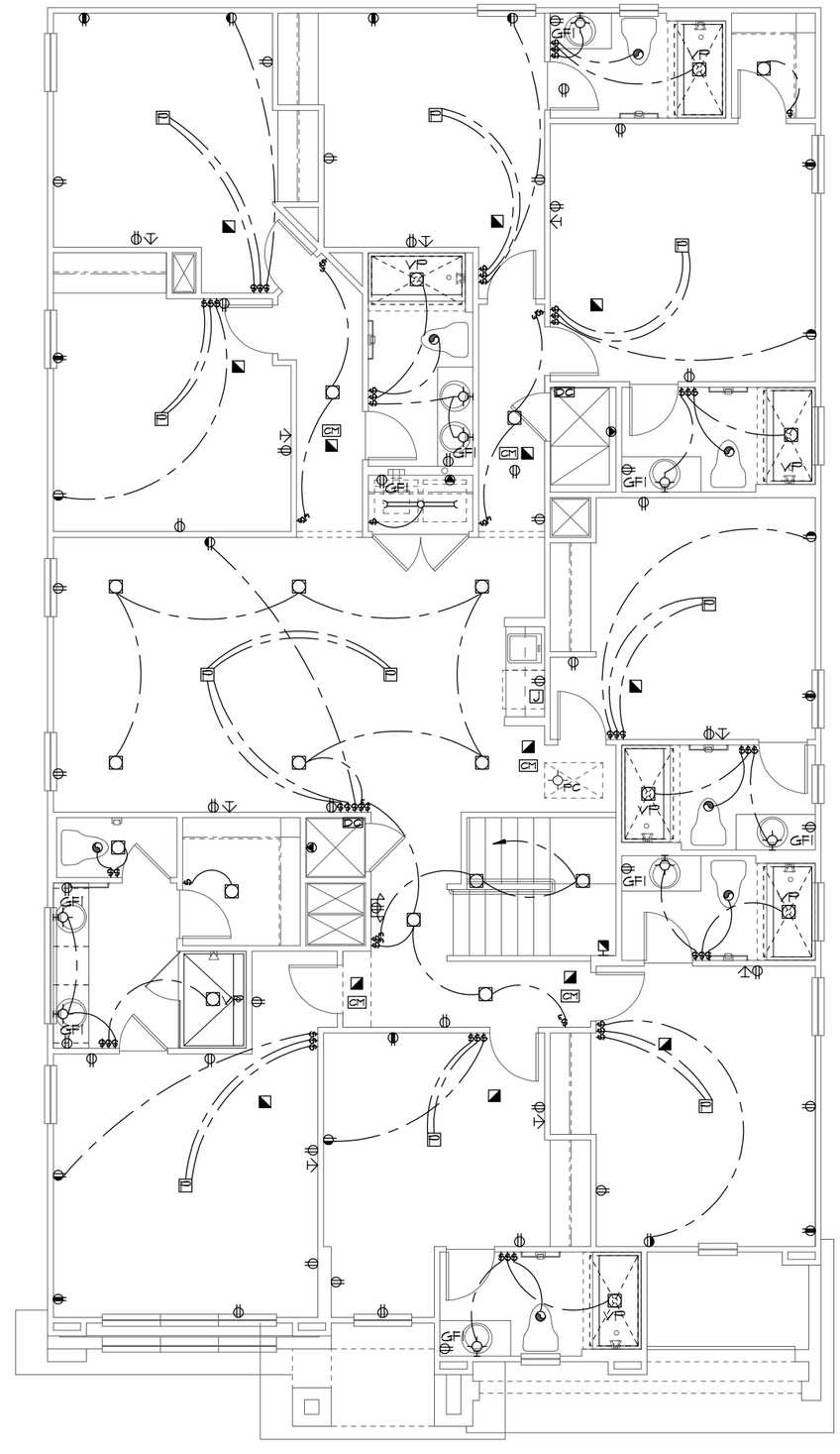

UPPER ELECTRICAL PLAN "C"

1/8"=1'-0" (11X17) 1/4"=1'-0" (22X34)

THIS STRUCTURE IS DESIGNED TO WITHSTAND 140 MPH WINDS PER THE 7th EDITION, 2020 OF THE FLORIDA BUILDING CODE RESIDENTIAL AND IS CERTIFIED AS SUCH

LOT: 0000, PARADISO GRANDE

© COPYRIGHT 2015
Park Square Homes hereby reserves its common law copyrights and other copyrights in these plans, ideas, and design. These plans, ideas and designs are not to be copied or changed in any manner or form whatsoever, nor are they to be assigned to any third party without first obtaining the express written permission from Park Square Homes.

PARADISO GRANDE

REVISIONS	BY
06-25-21	DH

Engineering By:
DBE and C
MICHAEL A. THOMPSON
PE 47509
PHONE 407-721-2292

A DIVISION OF PARK SQUARE ENTERPRISES, INC.
5200 Vineland Road, Suite 200
Orlando, Florida 32811
Phone: (407) 529 - 3000

Park Square HOMES

UPPER ELECTRICAL PLAN

SANDALWOOD
PARADISO GRANDE

4842

DATE	04-09-21
SCALE	AS NOTED
DRAWN	RDC
JOB	4842
SHEET	10C.0
OF	00 SHEETS

NOTES

1. TYPICAL ROOF GABLE OVERHANG TO BE 12" UNLESS OTHERWISE NOTED.
2. TYPICAL ROOF EAVES OVERHANG TO BE 12" UNLESS OTHERWISE NOTED.
3. PROVIDE AND INSTALL FLASHING AND ROOFING AS PER NATIONAL ROOFING AND SHEET METAL ASSOC. STANDARDS AND/ OR ACCEPTABLE INDUSTRY PRACTICE AND IN ACCORDANCE WITH THE 7TH EDITION (2020) FLORIDA RESIDENTIAL CODE.
4. ALL ROOF TRUSSES, GIRDERS, BEAMS, HEADERS, ETC. TO BE SIZED BY TRUSS MANUFACTURER OR FL. REG. ENG.
5. TRUSSES SHALL BE BRACED TO PREVENT ROTATION & PROVIDE LATERAL STABILITY IN ACCORDANCE WITH THE REQUIREMENTS SPECIFIED IN THE CONSTRUCTION DOCUMENTS FOR BUILDING & ON THE INDIVIDUAL TRUSS DESIGN DRAWINGS. IN THE ABSENCE OF SPECIFIC BRACING REQUIREMENTS, TRUSSES SHALL BE BRACED IN ACCORDANCE WITH TPI/WTCA BCSI 1.
6. REFER TO TRUSS MANUFACTURER'S DRAWINGS FOR TRUSS PLACEMENT & TRUSS TO TRUSS CONNECTIONS.
7. TILE ROOF: UNDERLAYMENT TO BE INSTALLED IAW FBCR 2020, 7TH EDITION R905.3.3. Underlayment materials required to comply with ASTM D226, D1970, D4869 and D6757 shall bear a label indicating compliance to the standard designation and, if applicable, type classification indicated in Table R905.1.1. Underlayment shall be applied and attached in accordance with Table R905.1.1.
8. OFF RIDGE VENTS MAXIMUN OPENING SIZES :
   - O-HAGIN - 7" X 19" HOLE
9. TILE ROOF TO BE INSTALLED IAW FBCR 2020, 7TH EDITION ASTM C1492-R905.3.5

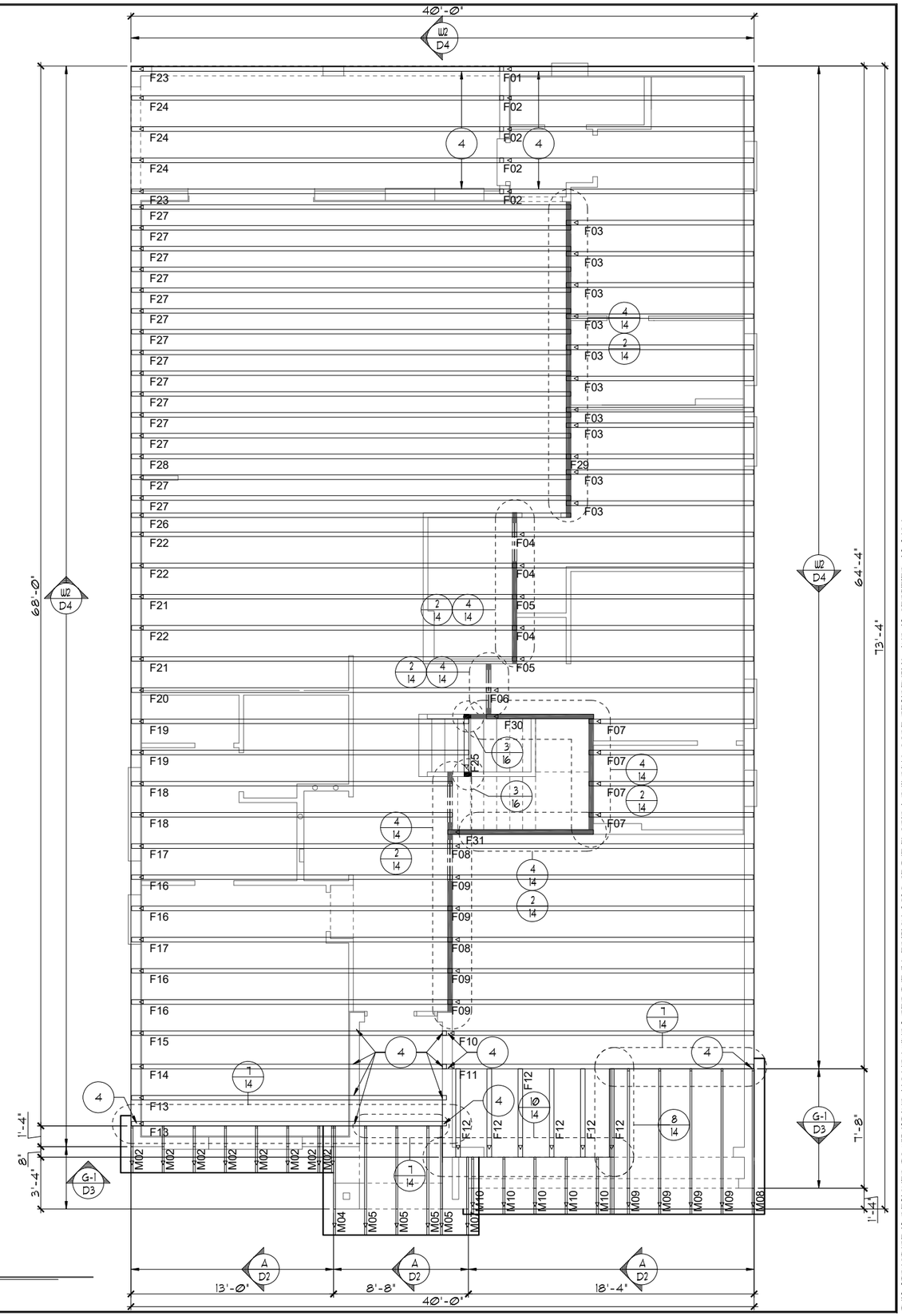

TRUSS LAYOUT "A"

1/8"=1'-0" (11X17) 1/4"=1'-0" (22X34)

THIS STRUCTURE IS DESIGNED TO WITHSTAND 140 MPH WINDS PER THE 7th EDITION, 2020 OF THE FLORIDA BUILDING CODE RESIDENTIAL AND IS CERTIFIED AS SUCH

LOT: 0000, PARADISO GRANDE

© COPYRIGHT 2015 Park Square Homes hereby reserves its common law copyrights and other copyrights in these plans, ideas, and design. These plans, ideas and designs are not to be copied or changed in any manner or form whatsoever, nor are they to be assigned to any third party without first obtaining the express written permission from Park Square Homes.

PARADISO GRANDE

REVISIONS	BY
06-25-21	DH

Engineering By:
DBE and C
MICHAEL A. THOMPSON
PE 47509
PHONE 407-721-2292

A DIVISION OF PARK SQUARE ENTERPRISES, INC.
5200 Vineland Road, Suite 200
Orlando, Florida 32811
Phone: (407) 529 - 3000

Park Square HOMES

TRUSS LAYOUT

SANDALWOOD

PARADISO GRANDE

4842

DATE	04-09-21
SCALE	AS NOTED
DRAWN	RDC
JOB	4842
SHEET	11A.0
OF	00 SHEETS

NOTES

1. TYPICAL ROOF GABLE OVERHANG TO BE 12" UNLESS OTHERWISE NOTED.
2. TYPICAL ROOF EAVES OVERHANG TO BE 12" UNLESS OTHERWISE NOTED.
3. PROVIDE AND INSTALL FLASHING AND ROOFING AS PER NATIONAL ROOFING AND SHEET METAL ASSOC. STANDARDS AND/ OR ACCEPTABLE INDUSTRY PRACTICE AND IN ACCORDANCE WITH THE 7TH EDITION (2020) FLORIDA RESIDENTIAL CODE.
4. ALL ROOF TRUSSES, GIRDERS, BEAMS, HEADERS, ETC. TO BE SIZED BY TRUSS MANUFACTURER OR FL. REG. ENG.
5. TRUSSES SHALL BE BRACED TO PREVENT ROTATION & PROVIDE LATERAL STABILITY IN ACCORDANCE WITH THE REQUIREMENTS SPECIFIED IN THE CONSTRUCTION DOCUMENTS FOR BUILDING & ON THE INDIVIDUAL TRUSS DESIGN DRAWINGS. IN THE ABSENCE OF SPECIFIC BRACING REQUIREMENTS, TRUSSES SHALL BE BRACED IN ACCORDANCE WITH TPI/WTCA BCSI 1.
6. REFER TO TRUSS MANUFACTURER'S DRAWINGS FOR TRUSS PLACEMENT & TRUSS TO TRUSS CONNECTIONS.
7. TILE ROOF: UNDERLAYMENT TO BE INSTALLED IAW FBCR 2020, 7TH EDITION R905.3.3. Underlayment materials required to comply with ASTM D226, D1970, D4869 and D6757 shall bear a label indicating compliance to the standard designation and, if applicable, type classification indicated in Table R905.1.1. Underlayment shall be applied and attached in accordance with Table R905.1.1.
8. OFF RIDGE VENTS MAXIMUN OPENING SIZES :
   - O-HAGIN - 7" X 19" HOLE
9. TILE ROOF TO BE INSTALLED IAW FBCR 2020, 7TH EDITION ASTM C1492-R905.3.5

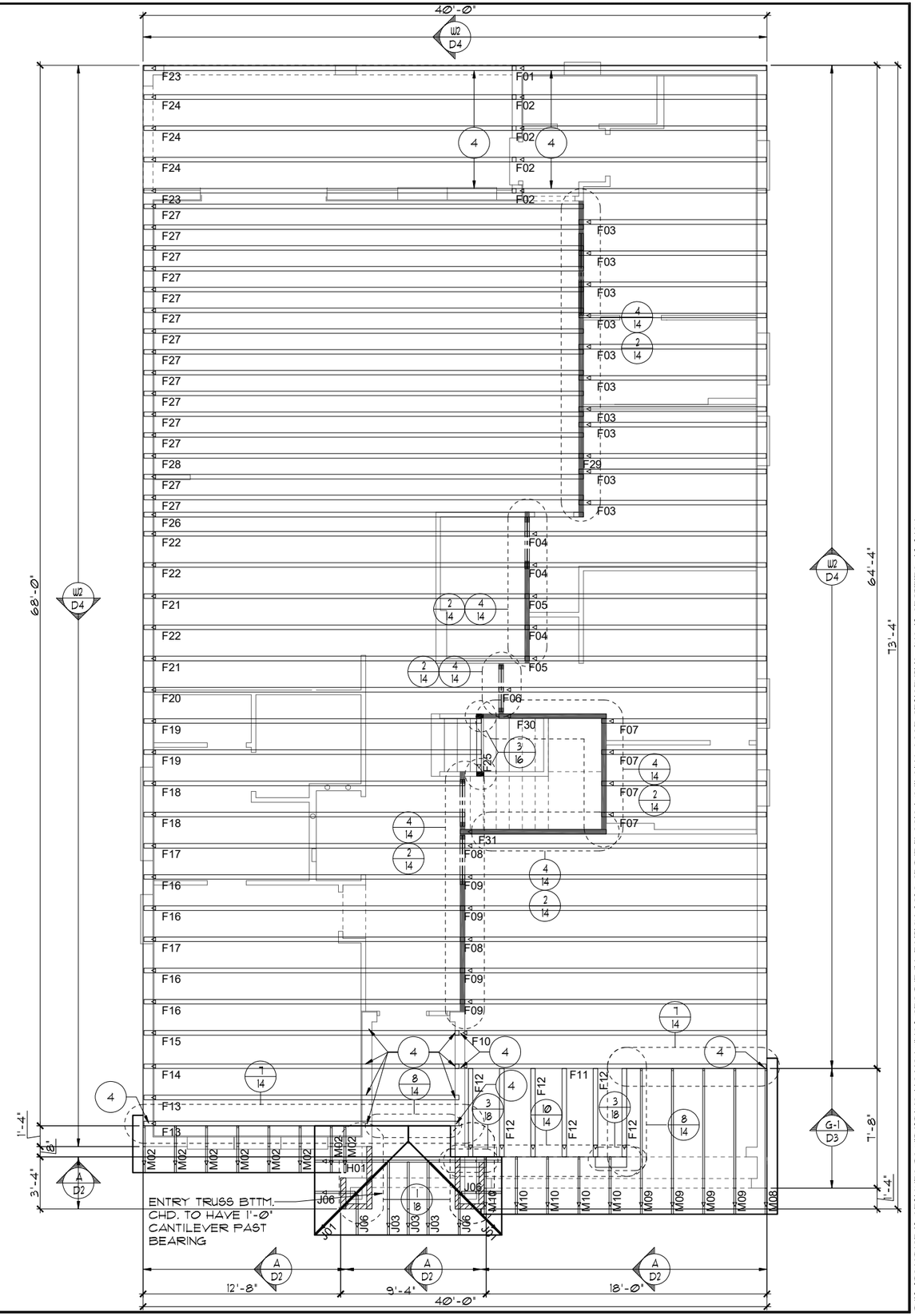

TRUSS LAYOUT "B"

1/8"=1'-0" (11X17) 1/4"=1'-0" (22X34)

THIS STRUCTURE IS DESIGNED TO WITHSTAND 140 MPH WINDS PER THE 7th EDITION, 2020 OF THE FLORIDA BUILDING CODE RESIDENTIAL AND IS CERTIFIED AS SUCH

LOT: 0000, PARADISO GRANDE

© COPYRIGHT 2015 Park Square Homes hereby reserves its common law copyrights and other copyrights in these plans, ideas, and design. These plans, ideas and designs are not to be copied or changed in any manner or form whatsoever, nor are they to be assigned to any third party without first obtaining the express written permission from Park Square Homes.

PARADISO GRANDE

REVISIONS	BY
06-25-21	DH

Engineering By:
DBE and C
MICHAEL A. THOMPSON
PE 47509
PHONE 407-721-2292

A DIVISION OF PARK SQUARE ENTERPRISES, INC.
5200 Vineland Road, Suite 200
Orlando, Florida 32811
Phone: (407) 529 - 3000

Park Square HOMES

TRUSS LAYOUT

SANDALWOOD

PARADISO GRANDE

4842

DATE	04-09-21
SCALE	AS NOTED
DRAWN	RDC
JOB	4842
SHEET	11B.0
OF	00 SHEETS

NOTES

1. TYPICAL ROOF GABLE OVERHANG TO BE 12" UNLESS OTHERWISE NOTED.
2. TYPICAL ROOF EAVES OVERHANG TO BE 12" UNLESS OTHERWISE NOTED.
3. PROVIDE AND INSTALL FLASHING AND ROOFING AS PER NATIONAL ROOFING AND SHEET METAL ASSOC. STANDARDS AND/ OR ACCEPTABLE INDUSTRY PRACTICE AND IN ACCORDANCE WITH THE 7TH EDITION (2020) FLORIDA RESIDENTIAL CODE.
4. ALL ROOF TRUSSES, GIRDERS, BEAMS, HEADERS, ETC. TO BE SIZED BY TRUSS MANUFACTURER OR FL. REG. ENG.
5. TRUSSES SHALL BE BRACED TO PREVENT ROTATION & PROVIDE LATERAL STABILITY IN ACCORDANCE WITH THE REQUIREMENTS SPECIFIED IN THE CONSTRUCTION DOCUMENTS FOR BUILDING & ON THE INDIVIDUAL TRUSS DESIGN DRAWINGS. IN THE ABSENCE OF SPECIFIC BRACING REQUIREMENTS, TRUSSES SHALL BE BRACED IN ACCORDANCE WITH TPI/WTCA BCSI 1.
6. REFER TO TRUSS MANUFACTURER'S DRAWINGS FOR TRUSS PLACEMENT & TRUSS TO TRUSS CONNECTIONS.
7. TILE ROOF: UNDERLAYMENT TO BE INSTALLED IAW FBCR 2020, 7TH EDITION R905.3.3. Underlayment materials required to comply with ASTM D226, D1970, D4869 and D6757 shall bear a label indicating compliance to the standard designation and, if applicable, type classification indicated in Table R905.1.1. Underlayment shall be applied and attached in accordance with Table R905.1.1.
8. OFF RIDGE VENTS MAXIMUN OPENING SIZES :
   - O-HAGIN - 7" X 19" HOLE
9. TILE ROOF TO BE INSTALLED IAW FBCR 2020, 7TH EDITION ASTM C1492-R905.3.5

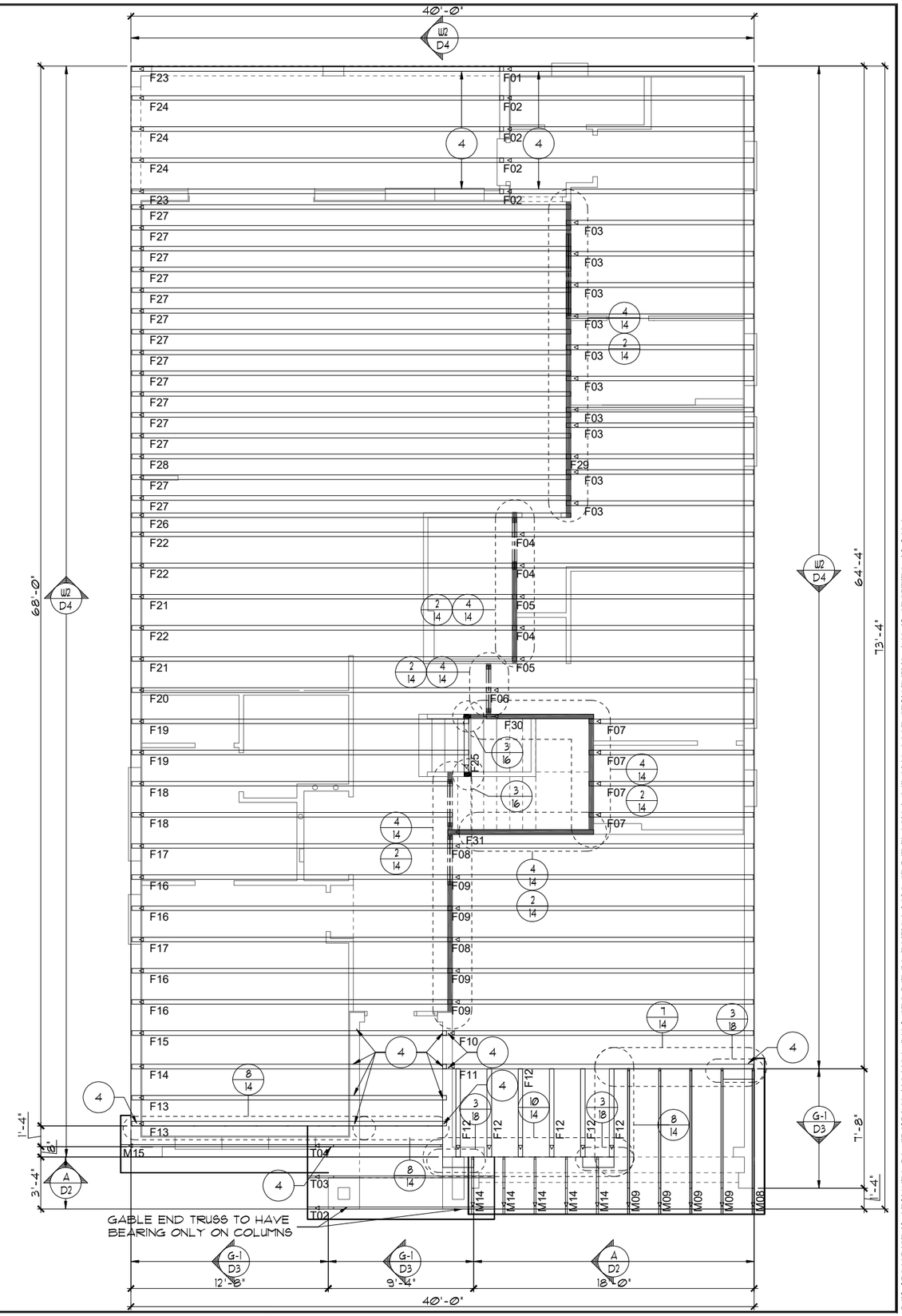

TRUSS LAYOUT "C"

1/8"=1'-0" (11X17) 1/4"=1'-0" (22X34)

THIS STRUCTURE IS DESIGNED TO WITHSTAND 140 MPH WINDS PER THE 7th EDITION, 2020 OF THE FLORIDA BUILDING CODE RESIDENTIAL AND IS CERTIFIED AS SUCH

LOT: 0000, PARADISO GRANDE

© COPYRIGHT 2015 Park Square Homes hereby reserves its common law copyrights and other copyrights in these plans, ideas, and design. These plans, ideas and designs are not to be copied or changed in any manner or form whatsoever, nor are they to be assigned to any third party without first obtaining the express written permission from Park Square Homes.

PARADISO GRANDE

REVISIONS	BY
06-25-21	DH

Engineering By:
DBE and C
MICHAEL A. THOMPSON
PE 47509
PHONE 407-721-2292

A DIVISION OF PARK SQUARE ENTERPRISES, INC.
5200 Vineland Road, Suite 200
Orlando, Florida 32811
Phone: (407) 529 - 3000

Park Square HOMES

TRUSS LAYOUT

SANDALWOOD

PARADISO GRANDE

4842

DATE	04-09-21
SCALE	AS NOTED
DRAWN	RDC
JOB	4842
SHEET	11C.0
OF	00 SHEETS

ATTIC VENTILATION CALCULATIONS

PER FBC2020 7TH EDITION R806: MIN. 40% - MAX. 50% OF REQUIRED VENTILATION TO BE IN UPPER PORTION OF ATTIC SPACE AND THE BALANCE TO BE IN LOWER PORTION (EAVES).

THE MINIMUM NET VENTILATION AREA SHALL BE 1/150 OF VENTED SPACE:

TOTAL VENTED SPACE: 2,932S.F. / 300 = 9.77S.F. NET FREE REQUIRED

UPPER PORTION VENTILATION TOTAL: N/I
PROVIDED W/OFF RIDGE VENTS: 5 VENTS @ 97S.F. /VENT.
(TILE: O'HAGIN MODEL 'S', SHINGLE: LOMANCO 770-D OR MILLENNIUM METAL)
LOWER PORTION VENTILATION TOTAL: N/I
PROVIDED W/SOFFITS @ EAVE: N/I @ 0.087SF VENTING/L.F.

UPPER PORTION PERCENTAGE: N/I
LOWER PORTION PERCENTAGE: N/I

NOTES

1. TYPICAL ROOF GABLE OVERHANG TO BE 12" UNLESS OTHERWISE NOTED.
2. TYPICAL ROOF EAVES OVERHANG TO BE 12" UNLESS OTHERWISE NOTED.
3. PROVIDE AND INSTALL FLASHING AND ROOFING AS PER NATIONAL ROOFING AND SHEET METAL ASSOC. STANDARDS AND/ OR ACCEPTABLE INDUSTRY PRACTICE AND IN ACCORDANCE WITH THE 7TH EDITION (2020) FLORIDA RESIDENTIAL CODE.
4. ALL ROOF TRUSSES, GIRDERS, BEAMS, HEADERS, ETC. TO BE SIZED BY TRUSS MANUFACTURER OR FL. REG. ENG.
5. TRUSSES SHALL BE BRACED TO PREVENT ROTATION & PROVIDE LATERAL STABILITY IN ACCORDANCE WITH THE REQUIREMENTS SPECIFIED IN THE CONSTRUCTION DOCUMENTS FOR BUILDING & ON THE INDIVIDUAL TRUSS DESIGN DRAWINGS. IN THE ABSENCE OF SPECIFIC BRACING REQUIREMENTS, TRUSSES SHALL BE BRACED IN ACCORDANCE WITH TPI/WTCA BCSI 1.
6. REFER TO TRUSS MANUFACTURER'S DRAWINGS FOR TRUSS PLACEMENT & TRUSS TO TRUSS CONNECTIONS.
7. TILE ROOF: UNDERLAYMENT TO BE INSTALLED IAW FBCR 2020, 7TH EDITION R905.3.3. Underlayment materials required to comply with ASTM D226, D1970, D4869 and D6757 shall bear a label indicating compliance to the standard designation and, if applicable, type classification indicated in Table R905.1.1. Underlayment shall be applied and attached in accordance with Table R905.1.1.
8. OFF RIDGE VENTS MAXIMUN OPENING SIZES :
   - O-HAGIN - 7" X 19" HOLE
9. TILE ROOF TO BE INSTALLED IAW FBCR 2020, 7TH EDITION ASTM C1492-R905.3.5

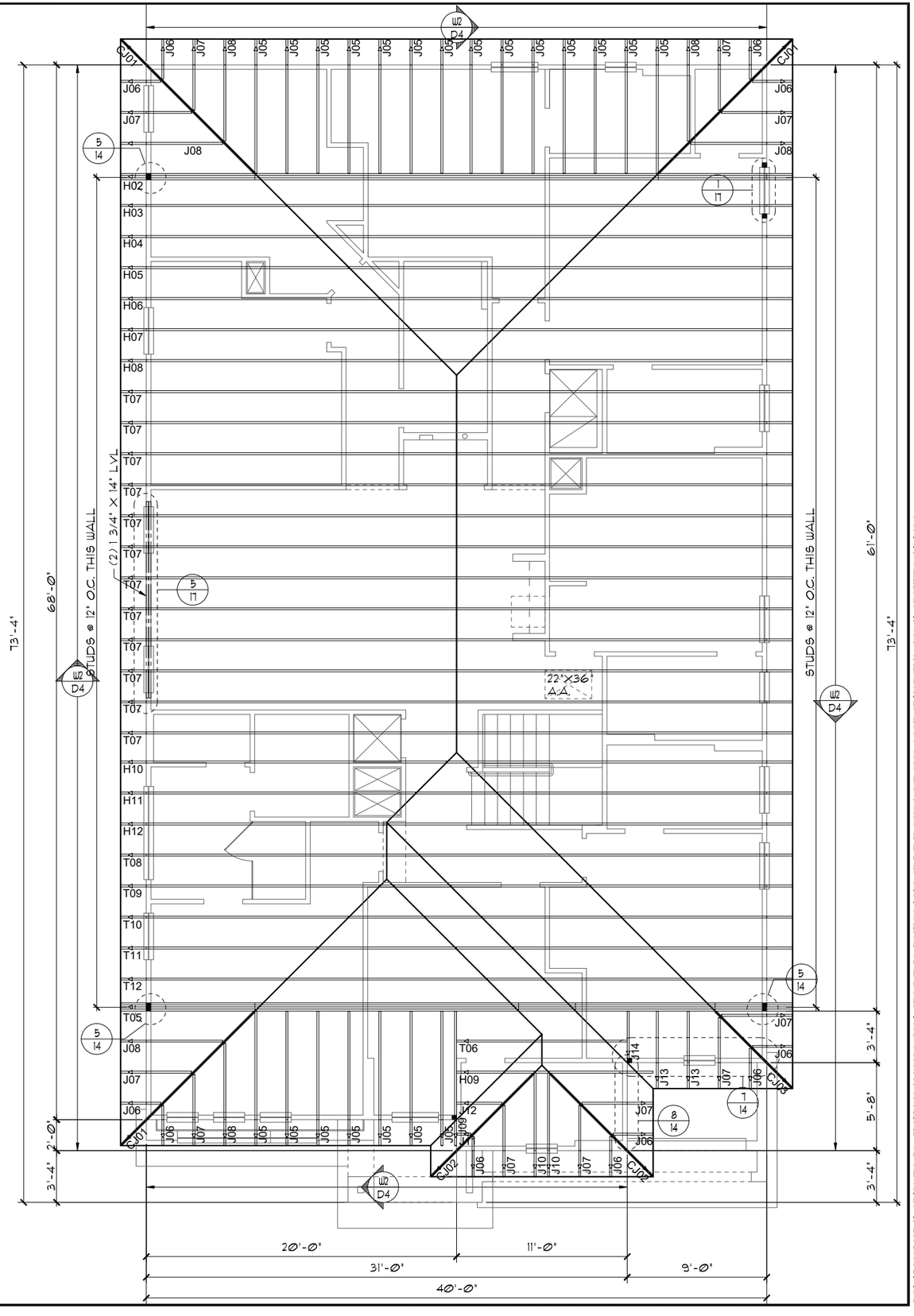

TRUSS LAYOUT "A"
1/8"=1'-0" (11X17) 1/4"=1'-0" (22X34)

THIS STRUCTURE IS DESIGNED TO WITHSTAND 140 MPH WINDS PER THE 7th EDITION, 2020 OF THE FLORIDA BUILDING CODE RESIDENTIAL AND IS CERTIFIED AS SUCH

LOT: 0000, PARADISO GRANDE

© COPYRIGHT 2015 Park Square Homes hereby reserves its common law copyrights and other copyrights in these plans, ideas, and design. These plans, ideas and designs are not to be copied or changed in any manner or form whatsoever, nor are they to be assigned to any third party without first obtaining the express written permission from Park Square Homes.

PARADISO GRANDE

REVISIONS	BY
06-25-21	DH

Engineering By:
DBE and C
MICHAEL A. THOMPSON
PE 47509
PHONE 407-721-2292

A DIVISION OF PARK SQUARE ENTERPRISES, INC.
5200 Vineland Road, Suite 200
Orlando, Florida 32811
Phone: (407) 529 - 3000

Park Square HOMES

TRUSS LAYOUT

SANDALWOOD
PARADISO GRANDE

4842

DATE	04-09-21
SCALE	AS NOTED
DRAWN	RDC
JOB	4842
SHEET	12A.0
OF	00 SHEETS

ATTIC VENTILATION CALCULATIONS

PER FBC2020 7TH EDITION R806: MIN. 40% - MAX. 50% OF REQUIRED VENTILATION TO BE IN UPPER PORTION OF ATTIC SPACE AND THE BALANCE TO BE IN LOWER PORTION (EAVES).

THE MINIMUM NET VENTILATION AREA SHALL BE 1/150 OF VENTED SPACE:

TOTAL VENTED SPACE: 2,932S.F. = 9.77S.F. NET FREE

TOTAL VENTED SPACE 300 = REQUIRED NET FREE REQUIRED

UPPER PORTION VENTILATION TOTAL: N/I

PROVIDED UPPER PORTION VENTILATION TOTAL @ 97S.F. /VENT. (TILE VENT: LOMANCO 77-D OR /VENT. MILLENNIUM: 15" MAGIN MODEL 'S', SHINGLE: LOMANCO 77-D OR LOWER PORTION VENTILATION TOTAL: N/I

PROVIDED LOWER PORTION VENTILATION TOTAL @ 0.108/SF VENTING/L.F.

PROVIDED W/SOFFITS @ EAVE: @ VENTING/L.F.

UPPER PORTION PERCENTAGE: N/I

LOWER PORTION PERCENTAGE: N/I

NOTES

1. TYPICAL ROOF GABLE OVERHANG TO BE 12" UNLESS OTHERWISE NOTED.
2. TYPICAL ROOF EAVES OVERHANG TO BE 12" UNLESS OTHERWISE NOTED.
3. PROVIDE ROOF VENTILATION AND INSTALL FLASHING AND SHEATHING AS ASSOCIATIONAL ROOFING AND/ OR GHERT THE ASSOC. STANDARDS PRACTICE AND ACCEPTABLE INDUSTRY PRACTICE AND IN ACCORDANCE WITH RESIDENTIAL 7TH EDITION (2020) FLORIDA RESIDENTIAL CODE
4. ALL ROOF TRUSSES, GIRDERS, BEAMS, HEADERS, ROOF TRUSSES, GIRDERS, BEAMS, MANUFACTURERS, ETC. TO BE SIZED BY TRUSS MANUFACTURER OR FL. REG. ENG.
5. TRUSSES SHALL BE BRACED TO PREVENT ROTATION AND PROVIDE LATERAL STABILITY IN ACCORDANCE WITH THE REQUIREMENTS SPECIFIED IN THE BUILDING CONSTRUCTION DOCUMENTS FOR DESIGN BUILDING ON THE INDIVIDUAL TRUSS SPECIFICATION DRAWINGS IN THE ABSENCE OF TRUSS SPECIFIC BRACING REQUIREMENTS, TRUSSES SHALL BE BRACED IN ACCORDANCE WITH TPI/WTCA BCSI 1.
6. REFER TO TRUSS MANUFACTURER'S DRAWINGS FOR TRUSS PLACEMENT & TRUSS TO TRUSS CONNECTIONS.
7. TILE ROOF: UNDERLAYMENT TO BE INSTALLED IAW FBCR 2020, 7TH EDITION R905.3.5 Underlayment shall be applied in accordance with Table R905.1.1. Underlayment shall be attached in accordance with Table R905.1.1.
8. OFF RIDGE VENTS MAXIMUN OPENING SIZES:
   - O-SIZES : 7" X 19" HOLE
9. TILE ROOF COVERING INSTALLED IAW FBCR 2020, 7TH EDITION R905.3.5 ASTM C1492-R905.3.5

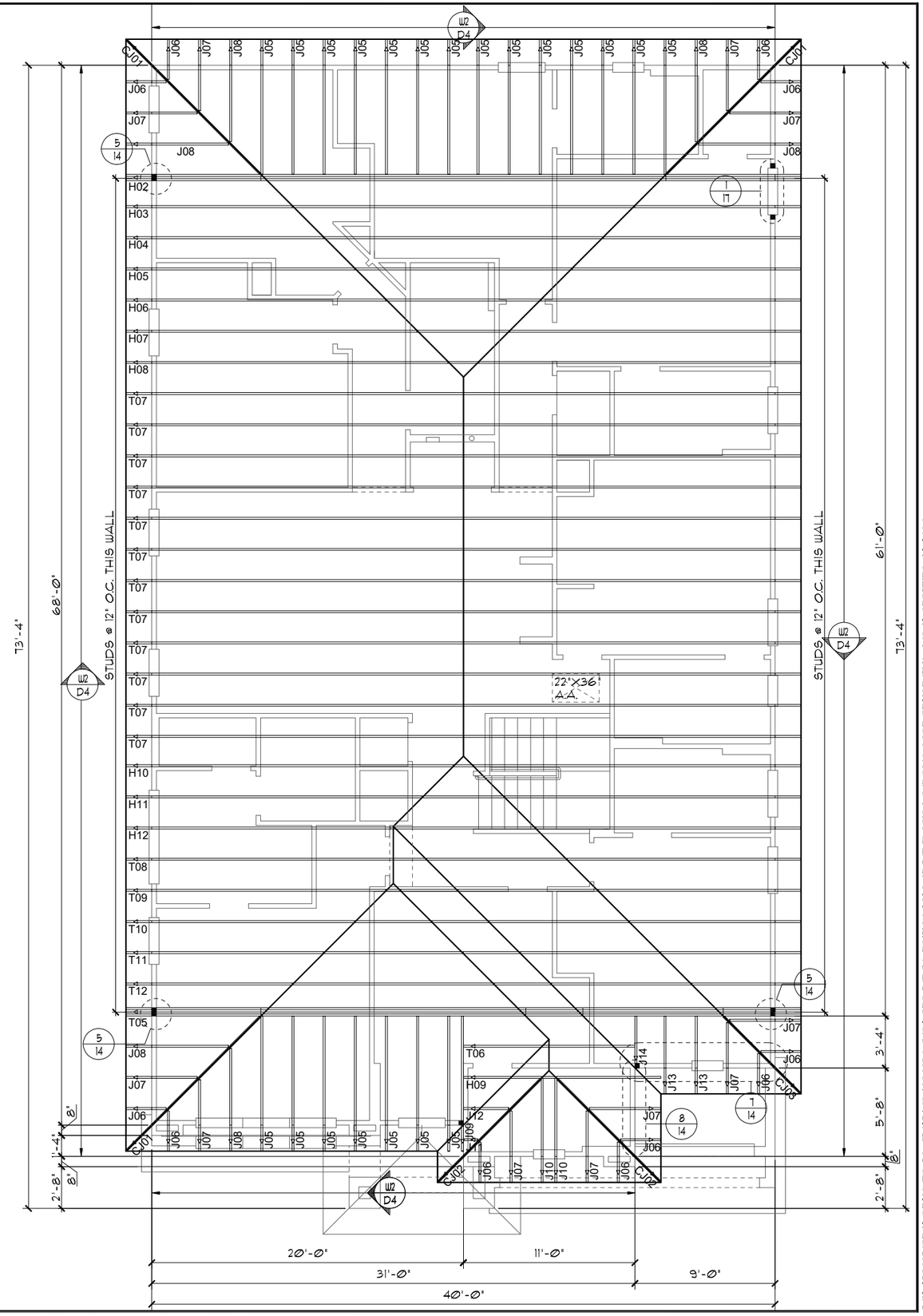

TRUSS LAYOUT "B"

1/8"=1'-0" (11X17) 1/4"=1'-0" (22X34)

THIS STRUCTURE IS DESIGNED TO WITHSTAND 140 MPH WINDS PER THE 7th EDITION, 2020 OF THE FLORIDA BUILDING CODE RESIDENTIAL AND IS CERTIFIED AS SUCH

LOT: 0000, PARADISO GRANDE

© COPYRIGHT 2015 Park Square Homes hereby reserves its common law copyrights and other copyrights in these plans, ideas, and design. These plans, ideas and designs are not to be copied or changed in any manner or form whatsoever, nor are they to be assigned to any third party without first obtaining the express written permission from Park Square Homes.

REVISIONS	BY
06-25-21	DH

Engineering By:
DBE and C
MICHAEL A. THOMPSON
PE 47509
PHONE 407-721-2292

A DIVISION OF PARK SQUARE ENTERPRISES, INC.
5200 Vineland Road, Suite 200
Orlando, Florida 32811
Phone: (407) 529 - 3000

Park Square HOMES

PARADISO GRANDE

TRUSS LAYOUT

SANDALWOOD

PARADISO GRANDE

4842

DATE	04-09-21
SCALE	AS NOTED
DRAWN	RDC
JOB	4842
SHEET	12B.0
OF	00 SHEETS

ATTIC VENTILATION CALCULATIONS

PER FBC2020 7TH EDITION R806: MIN. 40% - MAX. 50% OF REQUIRED VENTILATION TO BE IN UPPER PORTION OF ATTIC SPACE AND THE BALANCE TO BE IN LOWER PORTION (EAVES).

THE MINIMUM NET VENTILATION AREA SHALL BE 1/150 OF VENTED SPACE:

TOTAL VENTED SPACE: 2,932S.F. / 300 = 9.77S.F. NET FREE REQUIRED

UPPER PORTION VENTILATION TOTAL: N/I
PROVIDED W/OFF RIDGE VENTS: 5 VENTS @ .97S.F. /VENT.
(TILE: O'HAGIN MODEL 'S', SHINGLE: LOMANCO 770-D OR MILLENNIUM METAL)
LOWER PORTION VENTILATION TOTAL: N/I
PROVIDED W/SOFFITS @ EAVE: N/I @ 0.087SF VENTING/L.F.

UPPER PORTION PERCENTAGE: N/I
LOWER PORTION PERCENTAGE: N/I

NOTES

1. TYPICAL ROOF GABLE OVERHANG TO BE 12" UNLESS OTHERWISE NOTED.
2. TYPICAL ROOF EAVES OVERHANG TO BE 12" UNLESS OTHERWISE NOTED.
3. PROVIDE AND INSTALL FLASHING AND ROOFING AS PER NATIONAL ROOFING AND SHEET METAL ASSOC. STANDARDS AND/ OR ACCEPTABLE INDUSTRY PRACTICE AND IN ACCORDANCE WITH THE 7TH EDITION (2020) FLORIDA RESIDENTIAL CODE.
4. ALL ROOF TRUSSES, GIRDERS, BEAMS, HEADERS, ETC. TO BE SIZED BY TRUSS MANUFACTURER OR FL. REG. ENG.
5. TRUSSES SHALL BE BRACED TO PREVENT ROTATION & PROVIDE LATERAL STABILITY IN ACCORDANCE WITH THE REQUIREMENTS SPECIFIED IN THE CONSTRUCTION DOCUMENTS FOR BUILDING & ON THE INDIVIDUAL TRUSS DESIGN DRAWINGS. IN THE ABSENCE OF SPECIFIC BRACING REQUIREMENTS, TRUSSES SHALL BE BRACED IN ACCORDANCE WITH TPI/WTCA BCSI 1.
6. REFER TO TRUSS MANUFACTURER'S DRAWINGS FOR TRUSS PLACEMENT & TRUSS TO TRUSS CONNECTIONS.
7. TILE ROOF: UNDERLAYMENT TO BE INSTALLED IAW FBCR 2020, 7TH EDITION R905.3.3. Underlayment materials required to comply with ASTM D226, D1970, D4869 and D6757 shall bear a label indicating compliance to the standard designation and, if applicable, type classification indicated in Table R905.1.1. Underlayment shall be applied and attached in accordance with Table R905.1.1.
8. OFF RIDGE VENTS MAXIMUN OPENING SIZES :
   - O-HAGIN - 7" X 19" HOLE
9. TILE ROOF TO BE INSTALLED IAW FBCR 2020, 7TH EDITION ASTM C1492-R905.3.5

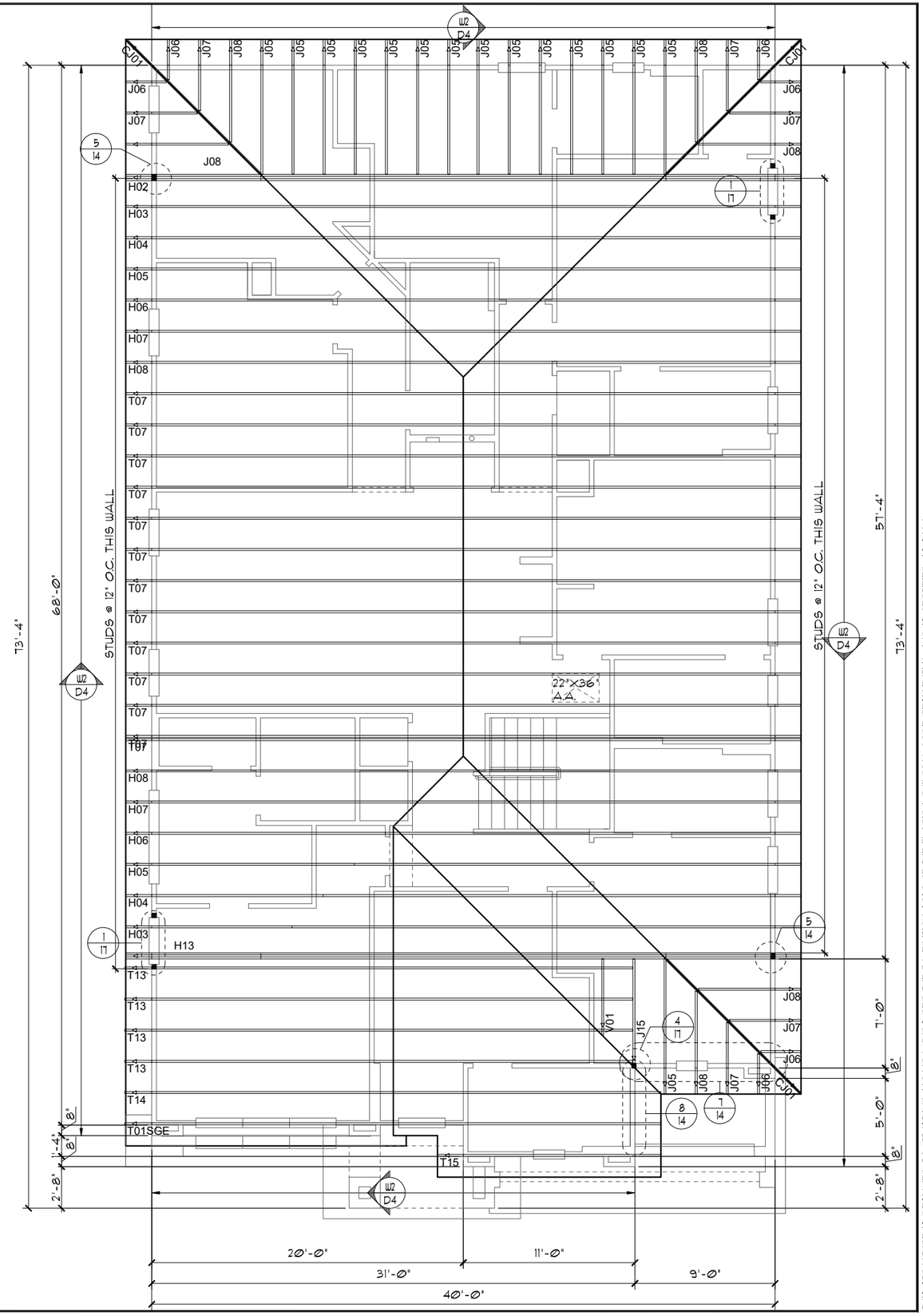

TRUSS LAYOUT "C"
1/8"=1'-0" (11X17) 1/4"=1'-0" (22X34)

THIS STRUCTURE IS DESIGNED TO WITHSTAND 140 MPH WINDS PER THE 7th EDITION, 2020 OF THE FLORIDA BUILDING CODE RESIDENTIAL AND IS CERTIFIED AS SUCH

LOT: 0000, PARADISO GRANDE

© COPYRIGHT 2015 Park Square Homes hereby reserves its common law copyrights and other copyrights in these plans, ideas, and design. These plans, ideas and designs are not to be copied or changed in any manner or form whatsoever, nor are they to be assigned to any third party without first obtaining the express written permission from Park Square Homes.

PARADISO GRANDE

REVISIONS	BY
06-25-21	DH

Engineering By:
DBE and C
MICHAEL A. THOMPSON
PE 47509
PHONE 407-721-2292

A DIVISION OF PARK SQUARE ENTERPRISES, INC.
5200 Vineland Road, Suite 200
Orlando, Florida 32811
Phone: (407) 529 - 3000

Park Square HOMES

TRUSS LAYOUT

SANDALWOOD
PARADISO GRANDE

4842

DATE	04-09-21
SCALE	AS NOTED
DRAWN	RDC
JOB	4842
SHEET	12C.0
OF	00 SHEETS

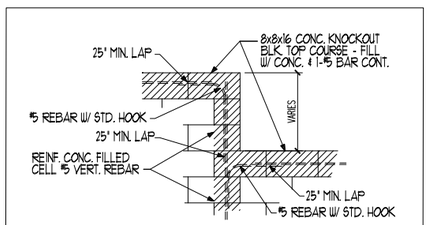

BLOCK WALL HT. TRANSITION DETAIL

CAST CRETE / LOTT'S / WEKIWA / FLORIDA ROCK
LINTEL SCHEDULE

LINTEL NO.	LENGTH	TYPE	COMMENTS
L 1	17'-4"	8F30-1B/IT	GARAGE DOOR
L 2	3'-6"	8F24-0B/IT	2/4X1/0 F.G.
L 3	4'-6"	8F24-0B/IT	SH25
L 4	4'-6"	8F24-0B/IT	SH25
L 5	4'-6"	8F16-0B/IT	3/4X1/6 F.G.
L 6	4'-6"	8F24-0B/IT	SH25
L 7	3'-6"	8F24-0B/IT	SH1143
L 8	4'-6"	8RF20-0B/IT	POOL BA. DOOR
L 9	7'-6"	8F24-0B/IT	PR. SH25
L 10	9'-4"	8F24-0B/IT	8/0X8/0 S.G.D.
L 11	11'-4"	8F16-1B/IT	LANAI
L 12	12'-4"	8F16-1B/IT	LANAI
L 13	8'-0"	8F16-0B/IT	LANAI
L 14	7'-6"	8F16-0B/IT	6/0X1/0 F.G.
L 15	4'-6"	8F24-0B/IT	SH25
L 16	10'-6"	8F24-0B/IT	(3) 3/0X5/0 CLR. F.G.
L 17	5'-10"	8RF20-0B/IT	FRONT DOOR
L 18	6'-6"	8F34-0B/IT	FRONT ENTRY
L 19	3'-6"	8F34-0B/IT	FRONT ENTRY
L 20	18'-0"	8F24-0B/IT	GARAGE ENTRY
L 21			
L 22			
L 23			
L 24			
L 25			
L 26			
L 27			

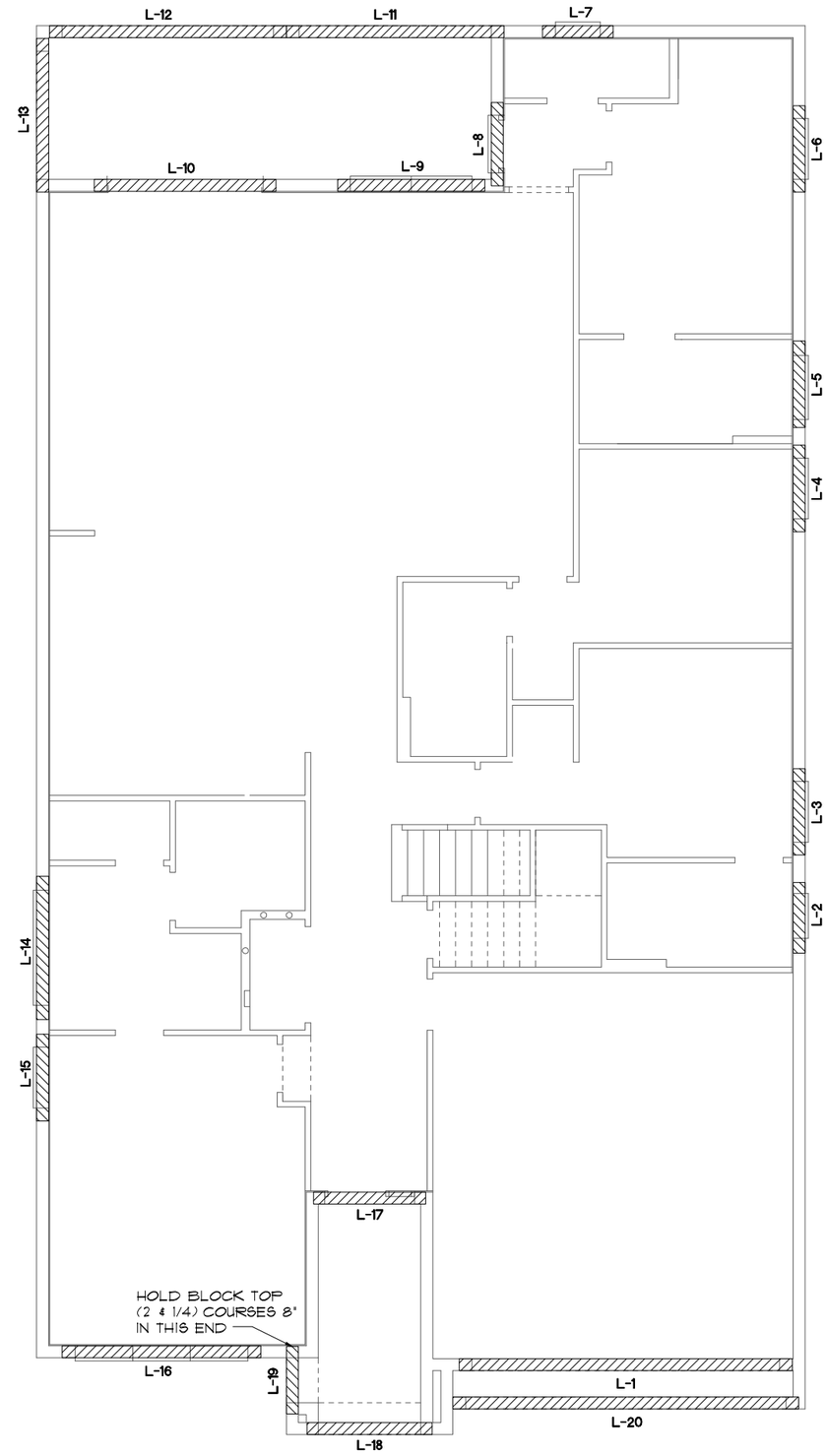

PRE CAST LINTEL LAYOUT "A"

1/8"=1'-0" (11X17) 1/4"=1'-0" (22X34)

THIS STRUCTURE IS DESIGNED TO WITHSTAND 140 MPH WINDS PER THE 7th EDITION, 2020 OF THE FLORIDA BUILDING CODE RESIDENTIAL AND IS CERTIFIED AS SUCH

LOT: 0000, PARADISO GRANDE

© COPYRIGHT 2015
Park Square Homes hereby reserves its common law copyrights and other copyrights in these plans, ideas, and design. These plans, ideas and designs are not to be copied or changed in any manner or form whatsoever, nor are they to be assigned to any third party without first obtaining the express written permission from Park Square Homes.

PARADISO GRANDE

REVISIONS	BY
06-25-21	DH

Engineering By:
DBE and C
MICHAEL A. THOMPSON
PE 47509
PHONE 407-721-2292

A DIVISION OF PARK SQUARE ENTERPRISES, INC.
5200 Vineland Road, Suite 200
Orlando, Florida 32811
Phone: (407) 529 - 3000

Park Square HOMES

PRE CAST LINTEL LAYOUT

SANDALWOOD
PARADISO GRANDE

4842

DATE	04-09-21
SCALE	AS NOTED
DRAWN	RDC
JOB	4842
SHEET	13A.0
OF	00 SHEETS

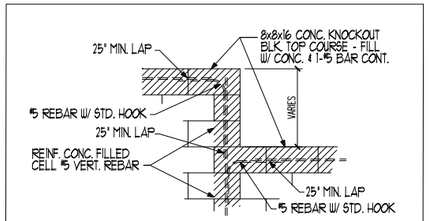

BLOCK WALL HT. TRANSITION DETAIL

CAST CRETE / LOTT'S / WEKIWA / FLORIDA ROCK
LINTEL SCHEDULE

LINTEL NO.	LENGTH	TYPE	COMMENTS
L 1	17'-4"	8F30-1B/IT	GARAGE DOOR
L 2	3'-6"	8F24-0B/IT	2/4X1/0 F.G.
L 3	4'-6"	8F24-0B/IT	8H25
L 4	4'-6"	8F24-0B/IT	8H25
L 5	4'-6"	8F16-0B/IT	3/4X1/6 F.G.
L 6	4'-6"	8F24-0B/IT	8H25
L 7	3'-6"	8F24-0B/IT	8H11H3
L 8	4'-6"	8RF20-0B/IT	POOL BA. DOOR
L 9	7'-6"	8F24-0B/IT	PR. 8H25
L 10	9'-4"	8F24-0B/IT	8/0X8/0 S.G.D.
L 11	11'-4"	8F16-1B/IT	LANAI
L 12	12'-4"	8F16-1B/IT	LANAI
L 13	8'-0"	8F16-0B/IT	LANAI
L 14	7'-6"	8F16-0B/IT	6/0X1/0 F.G.
L 15	4'-6"	8F24-0B/IT	8H25
L 16	10'-6"	8F24-0B/IT	(3) 3/0X5/0 CLR. F.G.
L 17	5'-10"	8RF20-0B/IT	FRONT DOOR
L 18	6'-6"	8F8-0B/IT	FRONT ENTRY
L 19	3'-6"	8F8-0B/IT	FRONT ENTRY
L 20	18'-0"	8F24-0B/IT	GARAGE ENTRY
L 21			
L 22			
L 23			
L 24			
L 25			
L 26			
L 27			

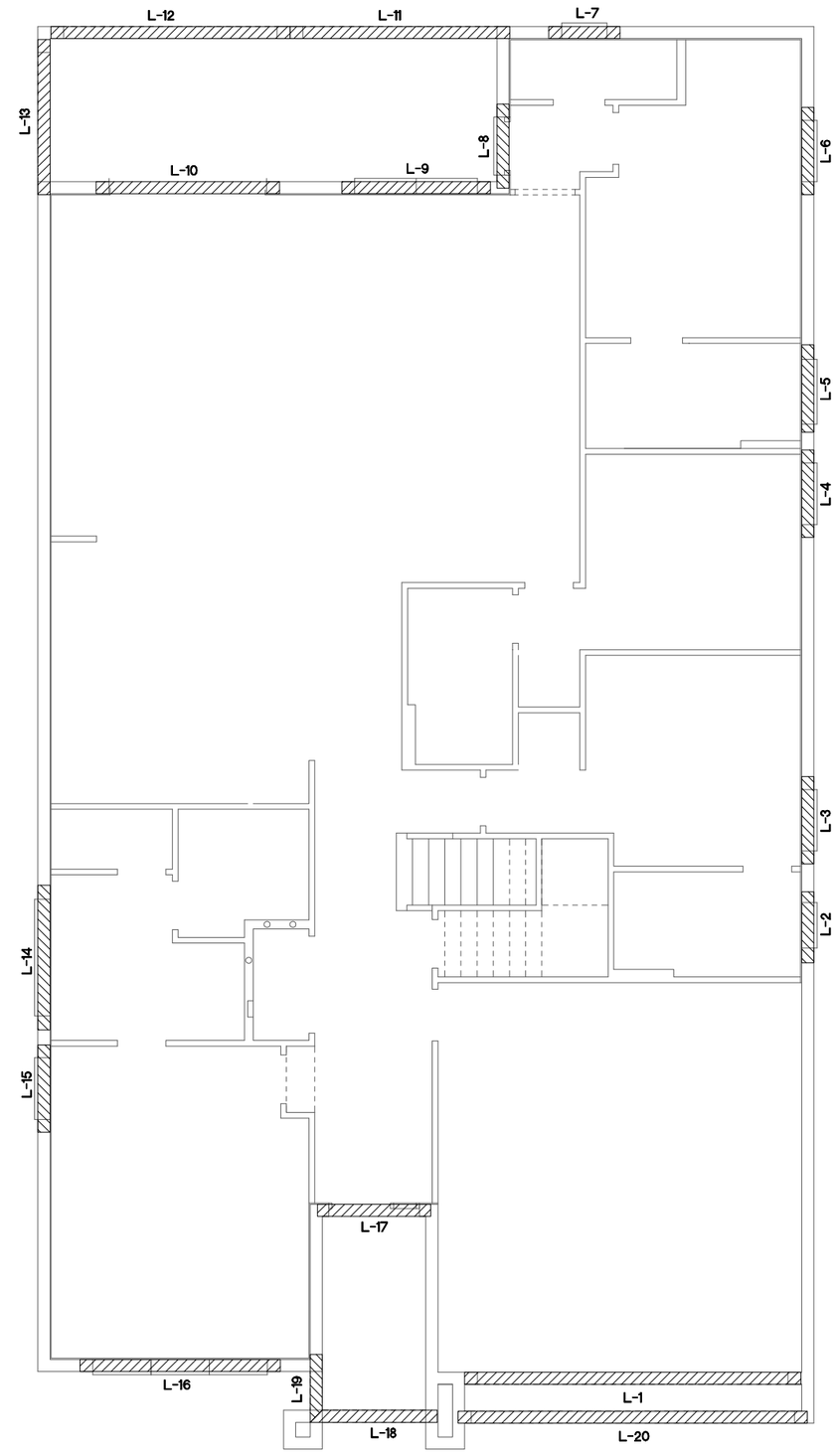

PRE CAST LINTEL LAYOUT "B"

1/8"=1'-0" (11X17) 1/4"=1'-0" (22X34)

THIS STRUCTURE IS DESIGNED TO WITHSTAND 140 MPH WINDS PER THE 7th EDITION, 2020 OF THE FLORIDA BUILDING CODE RESIDENTIAL AND IS CERTIFIED AS SUCH

LOT: 0000, PARADISO GRANDE

© COPYRIGHT 2015
Park Square Homes hereby reserves its common law copyrights and other copyrights in these plans, ideas, and design. These plans, ideas and designs are not to be copied or changed in any manner or form whatsoever, nor are they to be assigned to any third party without first obtaining the express written permission from Park Square Homes.

PARADISO GRANDE

REVISIONS	BY
06-25-21	DH

Engineering By:
DBE and C
MICHAEL A. THOMPSON
PE 47509
PHONE 407-721-2292

A DIVISION OF PARK SQUARE ENTERPRISES, INC.
5200 Vineland Road, Suite 200
Orlando, Florida 32811
Phone: (407) 529 - 3000

Park Square HOMES

PRE CAST LINTEL LAYOUT

SANDALWOOD
PARADISO GRANDE

4842

DATE	04-09-21
SCALE	AS NOTED
DRAWN	RDC
JOB	4842
SHEET	13B.0
OF	00 SHEETS

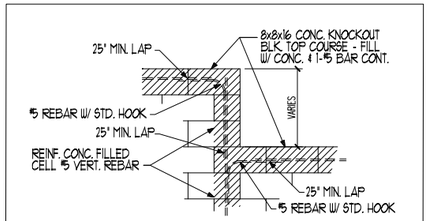

BLOCK WALL HT. TRANSITION DETAIL

CAST CRETE / LOTT'S / WEKIWA / FLORIDA ROCK
LINTEL SCHEDULE

LINTEL NO.	LENGTH	TYPE	COMMENTS
L 1	17'-4"	8F30-1B/IT	GARAGE DOOR
L 2	3'-6"	8F24-0B/IT	2/4X1/0 F.G.
L 3	4'-6"	8F24-0B/IT	8H25
L 4	4'-6"	8F24-0B/IT	8H25
L 5	4'-6"	8F16-0B/IT	3/4X1/6 F.G.
L 6	4'-6"	8F24-0B/IT	8H25
L 7	3'-6"	8F24-0B/IT	8H11H3
L 8	4'-6"	8RF20-0B/IT	POOL BA. DOOR
L 9	7'-6"	8F24-0B/IT	PR. 8H25
L 10	9'-4"	8F24-0B/IT	8/0X8/0 S.G.D.
L 11	11'-4"	8F16-1B/IT	LANAI
L 12	12'-4"	8F16-1B/IT	LANAI
L 13	8'-0"	8F16-0B/IT	LANAI
L 14	7'-6"	8F16-0B/IT	6/0X1/0 F.G.
L 15	4'-6"	8F24-0B/IT	8H25
L 16	10'-6"	8F24-0B/IT	(3) 3/0X5/0 CLR. F.G.
L 17	5'-10"	8RF20-0B/IT	FRONT DOOR
L 18	18'-0"	8F24-0B/IT	GARAGE ENTRY
L 19	6'-6"	8F8-0B/IT	FRONT ENTRY
L 20	3'-6"	8F8-0B/IT	FRONT ENTRY
L 21			
L 22			
L 23			
L 24			
L 25			
L 26			
L 27			

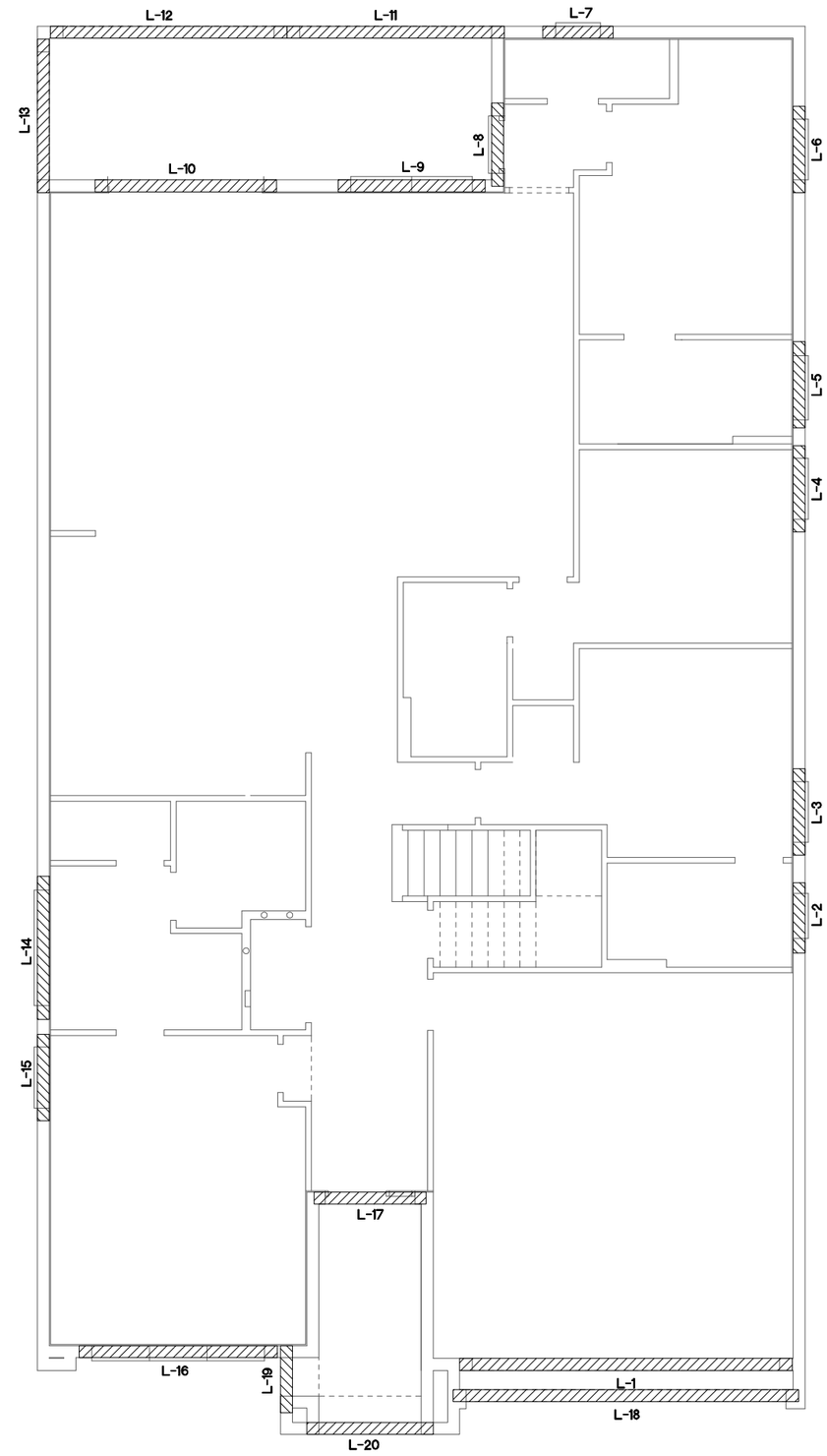

PRE CAST LINTEL LAYOUT "C"

1/8"=1'-0" (11X17) 1/4"=1'-0" (22X34)

THIS STRUCTURE IS DESIGNED TO WITHSTAND 140 MPH WINDS PER THE 7th EDITION, 2020 OF THE FLORIDA BUILDING CODE RESIDENTIAL AND IS CERTIFIED AS SUCH

LOT: 0000, PARADISO GRANDE

© COPYRIGHT 2015
Park Square Homes hereby reserves its common law copyrights and other copyrights in these plans, ideas, and design. These plans, ideas and designs are not to be copied or changed in any manner or form whatsoever, nor are they to be assigned to any third party without first obtaining the express written permission from Park Square Homes.

PARADISO GRANDE

REVISIONS	BY
06-25-21	DH

Engineering By:
DBE and C
MICHAEL A. THOMPSON
PE 47509
PHONE 407-721-2292

A DIVISION OF PARK SQUARE ENTERPRISES, INC.
5200 Vineland Road, Suite 200
Orlando, Florida 32811
Phone: (407) 529 - 3000

Park Square HOMES

PRE CAST LINTEL LAYOUT

SANDALWOOD
PARADISO GRANDE

4842

DATE	04-09-21
SCALE	AS NOTED
DRAWN	RDC
JOB	4842
SHEET	13C.0
OF	00 SHEETS

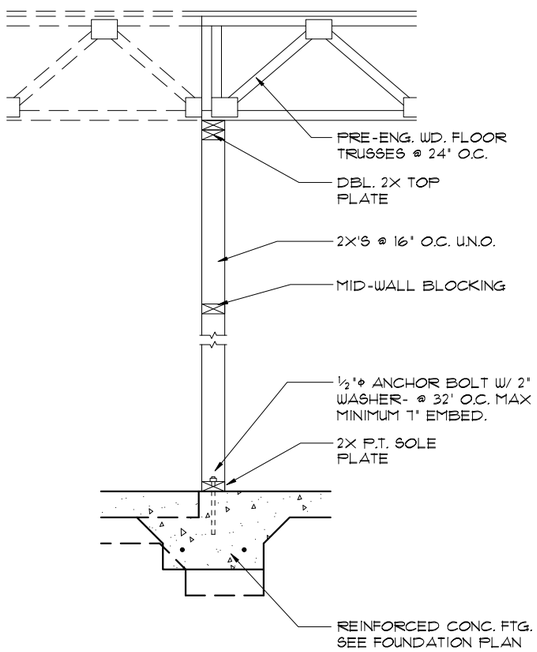

4/14 DETAIL
1/2"=1'-0" (11X17) 1"=1'-0" (22X34)

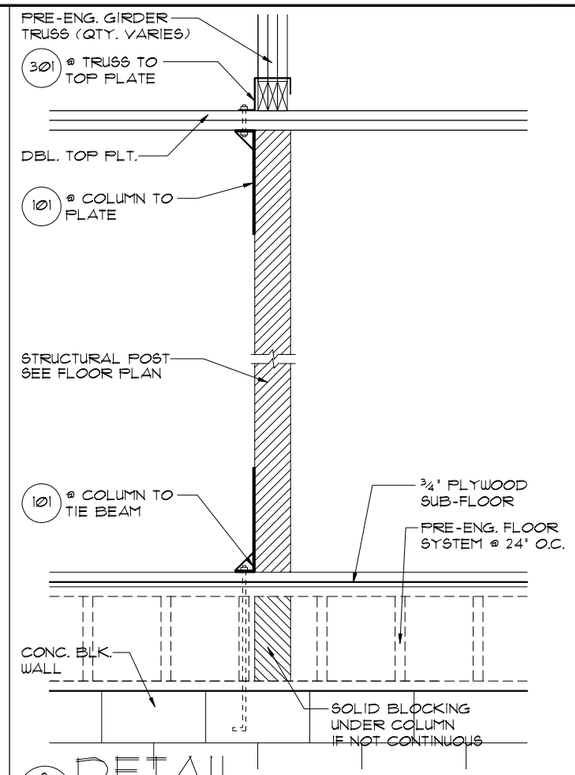

3/14 DETAIL
1/2"=1'-0" (11X17) 1"=1'-0" (22X34)

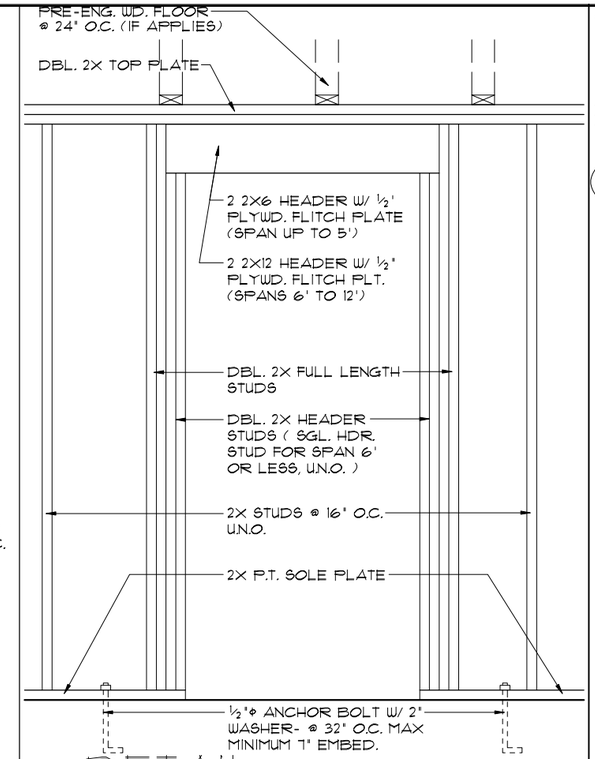

2/14 DETAIL (BRG. W/O UPLIFT)
1/2"=1'-0" (11X17) 1"=1'-0" (22X34)

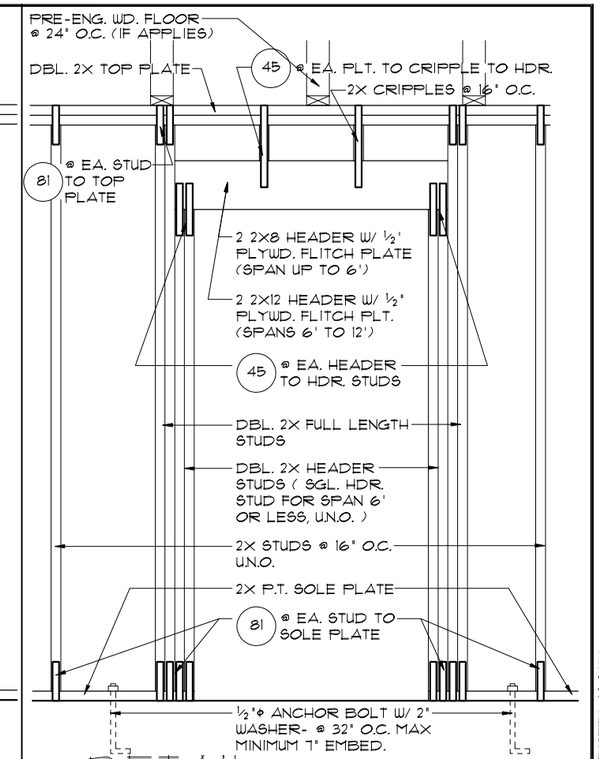

1/14 DETAIL (BRG. W/ UPLIFT)
1/2"=1'-0" (11X17) 1"=1'-0" (22X34)

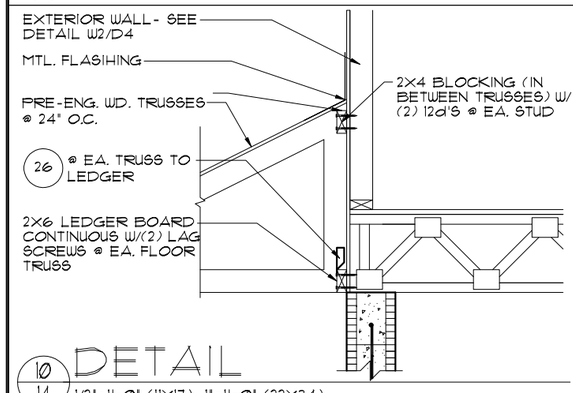

10/14 DETAIL
1/2"=1'-0" (11X17) 1"=1'-0" (22X34)

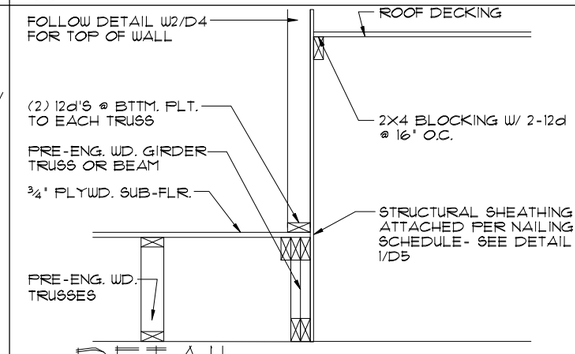

8/14 DETAIL
1/2"=1'-0" (11X17) 1"=1'-0" (22X34)

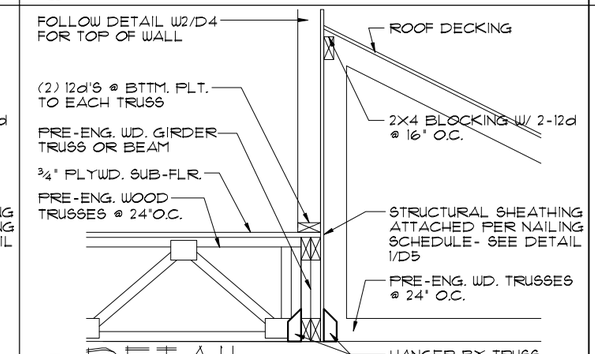

6/14 DETAIL
1/2"=1'-0" (11X17) 1"=1'-0" (22X34)

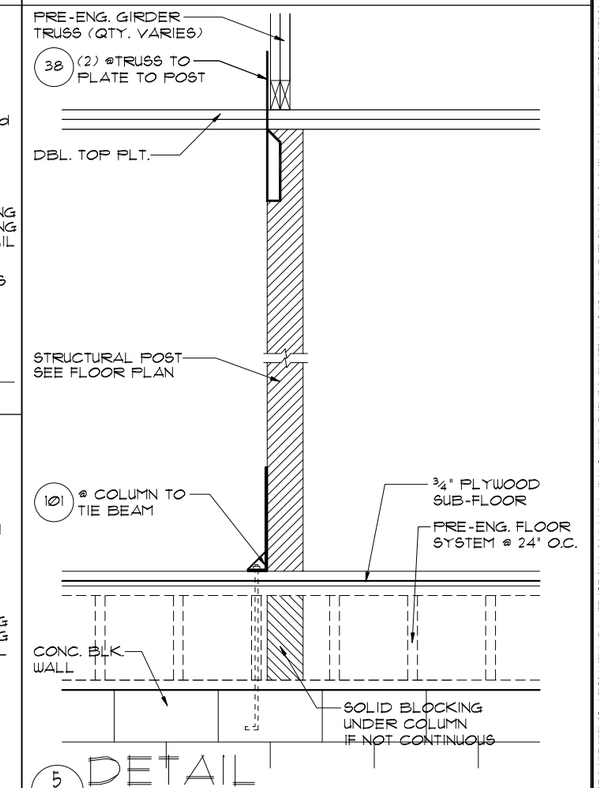

5/14 DETAIL
1/2"=1'-0" (11X17) 1"=1'-0" (22X34)

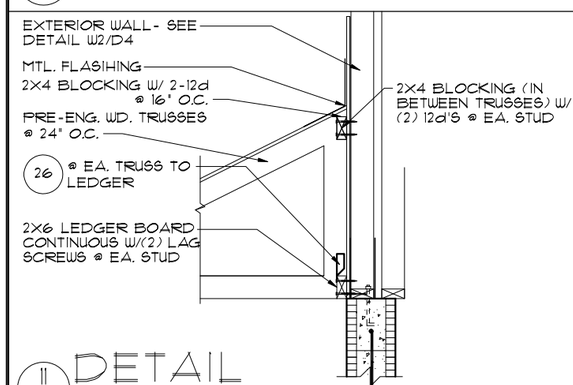

11/14 DETAIL
1/2"=1'-0" (11X17) 1"=1'-0" (22X34)

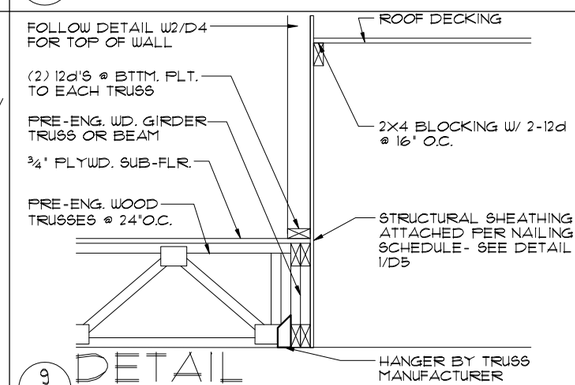

9/14 DETAIL
1/2"=1'-0" (11X17) 1"=1'-0" (22X34)

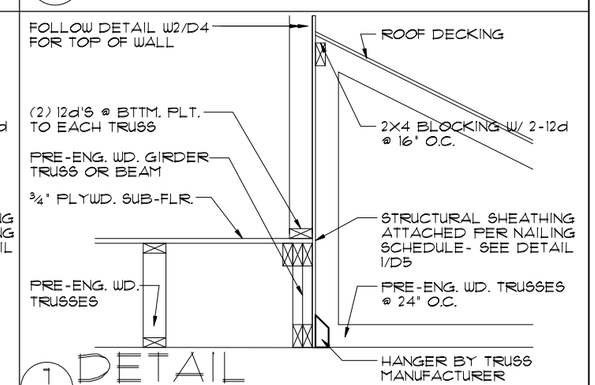

7/14 DETAIL
1/2"=1'-0" (11X17) 1"=1'-0" (22X34)

THIS STRUCTURE IS DESIGNED TO WITHSTAND 140 MPH WINDS PER THE 7th EDITION, 2020 OF THE FLORIDA BUILDING CODE RESIDENTIAL AND IS CERTIFIED AS SUCH

LOT: 0000, PARADISO GRANDE

© COPYRIGHT 2015
These plans, ideas, and design: These plans, ideas and designs are not to be copied or changed in any manner or form whatsoever, nor are they to be assigned to any third party without first obtaining the express written permission from Park Square Homes.

PARADISO GRANDE

REVISIONS	BY
06-25-21	DH

Engineering By:
DBE and C
MICHAEL A. THOMPSON
PE 47509
PHONE 407-721-2292

A DIVISION OF PARK SQUARE ENTERPRISES, INC.
5200 Vineland Road, Suite 200
Orlando, Florida 32811
Phone: (407) 529 - 3000

Park Square HOMES

TYPICAL DETAILS

SANDALWOOD
PARADISO GRANDE

4842

DATE	04-09-21
SCALE	AS NOTED
DRAWN	RDC
JOB	4842
SHEET	14
OF	00 SHEETS

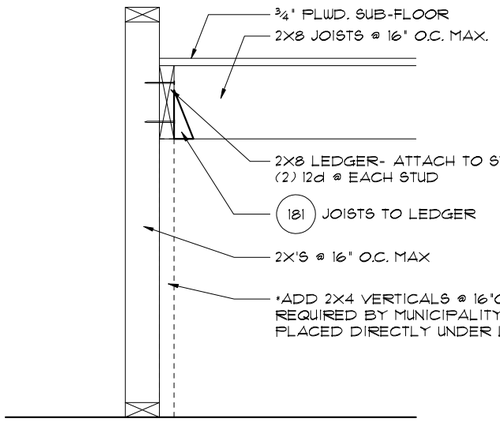

4/15 TYP. STAIR CONNECT.

3/4"= 1'-0" (11X17) 1½"= 1'-0" (22"X34") PLATFORM FRAMING

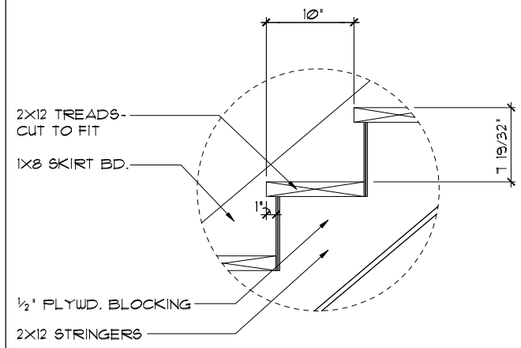

DATA: TOTAL RISE: 11'-4 ¾" (18 RISERS @ 7 19/32" EA.)
TOTAL RUN: 14'-2" (17 TREADS @ 10" EA.)

1/15 STAIR DETAIL

3/4"= 1'-0" (11X17) 1½"= 1'-0" (22"X34") STAIR DATA

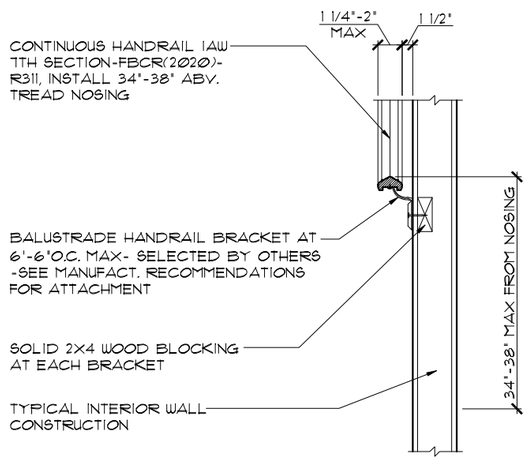

5/15 TYP. HANDRAIL DET.

3/4"= 1'-0" (11X17) 1½"= 1'-0" (22"X34")

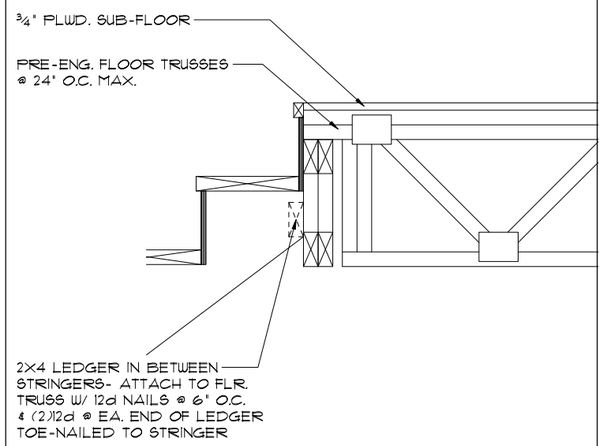

2/15 TYP. STAIR CONNECT.

3/4"=1'-0" (11X17) 1½"=1'-0" (22"X34") STRINGER TO FLOOR TRUSS

NOTES:

STAIRWAY CONSTRUCTION TO CONFORM TO FBCR 2020,7 TH EDITION SECTION R311.7

MAX. HGT. OF RISER TO BE 7¾"
MIN. WIDTH OF TREAD TO BE 9"(EXCLUSIVE OF NOSING)
ALL TREADS LESS THAN 10" IN WIDTH SHALL HAVE APPROX. 1" OF NOSING
3/16" MAX. VARIATION IN RISERS/TREADS ADJACENT TO EACH OTHER
3/8" MAX. VARIATION IN ANY RISER/TREAD

HAND RAIL CIRCULAR CROSS SECTION DIA. TO BE 1 1/4" - 2" OR TO PROVIDE EQUIVALENT GRASPABILITY.

WINDERS: MIN. 6" WIDE @ NARROW END

34"MIN.-38"MAX., HANDRAIL HGT.

HEADROOM CLEARANCE MIN. 6'-8"

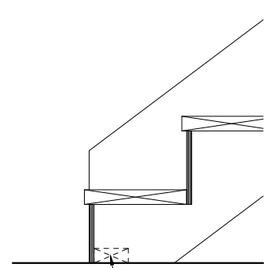

3/15 TYP. STAIR CONNECT.

3/4"= 1'-0" (11X17) 1½"= 1'-0" (22"X34") STRINGER TO FLOOR

CONNECTOR SCHEDULE

CONNECT. TYPE	SIMPSON DESCRIPTION	SIMPSON FASTENERS PER CONNECTOR	USP DESCRIPTION	USP FASTENERS PER CONNECTOR	MAX. UPLIFT	LAT. LDS. F1 / F2
4	HETA20	14-10d x 1½"	ETA20	14-10d	1,810	65 / 360
22	H10S	RFT: 8-8d x 1 1/2" PLT: 8-8d x 1 1/2"	RT16	RFT: 8-8d x 1½" PLT: 8-8d	990	585/525
23	LUS26	HDR: 4-10d/JST: 4-10d	JUS26	HDR: 4-10d/JST: 4-10d	935	N/A
24	H7	RFT / TRS: 4-8d PLT / STD: 10-8d	RT20	RFT / TRS: 9-10d PLT / STD: 13-10d	985	400 / N/A
26	H2.5	RFT:5-8d / PLT: 5-8d	RT7	RFT:5-8d / PLT: 5-8d	415	150 / 150
35	A35F	H:4-8dx1½"/P:4-8dx1½"	MPA1F	H:6-8dx1½"/P:6-8dx1½"	440	440 / N/A
37	MTS12	14-10d	MTW12	14-10d	1,000	N/A
38	MTS16	14-10d	MTW16	14-10d	1,000	N/A
39	MTSM16	BLK: (4)¼"X2¼" T.C. TRUSS: (7) 10d	MTW16	BLK: (4)¼"X2¼" T.C. TRUSS: (7) 10d	860	N/A
43	LSTA12	10-10d	LSTA12	10-10d	905	N/A
44	HGA10	RFT / 4-SDS ¼"X1½" PLT /4-SDS ¼"X3"	N/A	N/A N/A	500	840/675
45	ST18	14-16d	ST18	14-16d	1,200	N/A
47	LSTA24	18-10d	LSTA24	18-10d	1,295	N/A
71	MSTA36	26-10d	MSTA36	26-10d	2,135	N/A
72	MSTC66	64-16d SINKERS	N/A	N/A	5,495	N/A
79	SP1	STD:6-10d / PLT:4-10d	SPT22	STD:4-10d / PLT:4-10d	535	560 / 260
80	SP2	STD:6-10d / PLT:6-10d	SPT224	STD:6-10d / PLT:6-10d	605	560 / 260
81	SPH4,6,8	12-10d x 1½"	TP4,6,8	12-10d x 1½"	885	N/A
82	TSP	STD 6-10d/ 9-10dX1½" PLT 6-10dX1½"/ 6-10d	N/A	N/A N/A	755 1015	N/A
86	ECCLL/RQ-SDS2.5	¼"X2½" STRONG DRIVE SDS H.D. CON. SCREWS	N/A	N/A	M: 2835 S: 1840	N/A
88	CBSQ88	12 SDS 1/4X2"			3975	N/A
89	CB66	(2) ⅝" BOLTS	PA8X8	4-10d	2,300	985
90	ABU66	12-16d	PAU66	12-16d	2,240	N/A
91	CBSQ66	14 SDS 1/4X2"			3,190	N/A
92	ABU44	12-16d	PAU44	12-16d	2,200	N/A
93	AC6 (MAX)	28-16d	PBS66	24-16d	1,815	1,070
94	AC4 (MAX)	28-16d	PBS44	24-16d	1,815	1,070
95	HTS20	20-10d	HTW20	20-10d	1,450	N/A
99	A35	H:4-8dx1½"/P:4-8dx1½"	MPA1	H:6-8dx1½"/P:6-8dx1½"	440	440 / N/A
101	HTT4	⅝" BOLT/ 18-16dX2½"	N/A	N/A	3,640	N/A
102	HTT5	⅝" BOLT/ 26-10d	N/A	N/A	4,275	N/A
103	VGTR/L	32-SDS¼"X3"/(2) ⅝" BLT	N/A	N/A	3,990	N/A
104	HDU8-SDS2.5	7/8" BLT/20-SDS ¼"x2½"	N/A	N/A	5,020	N/A
105	HDT8	7/8"-3-3/4"	N/A	N/A	6,645	N/A
181	HUS26	20-16d	THD26	H:20-16d/J:10-10d	1,550	N/A
184	HUC28-2	H:14-16d/J:4-10d	N/A	N/A	1,085	N/A
212	HUC410	BLOCK: 10-¼"X1½" TC JOIST : 10-16d	N/A	N/A	1,810	N/A
213	HSUR/L410	BLOCK: 20-16d JOIST : 6-16d	N/A	BLOCK: N/A JOIST : N/A	1,300	N/A
214	HUC412	BLOCK: 10-¼"X1½" TC JOIST : 10-16d	HUS412	BLOCK: 10-¼"X1½" TC JOIST : 10-16d	1,895	N/A
215	HGUS210-2	HDR:46-16d/JST:10-16d	EHUH210-2	HDR:40-16d/JST:16-10d	2,720	N/A
216	HUCS412	BLOCK: 10-¼"X1½" TC JOIST : 10-16d	HUS412	BLOCK: 10-¼"X1½" TC JOIST : 10-16d	3,240	N/A
217	HUS212-2	BLOCK: 10-¼"X1½" TC JOIST : 10-16d	HUS212-2	BLOCK: 10-¼"X1½" TC JOIST : 10-16d	2,630	N/A
219	MBHA412	H:1-ATR¾X8 TOP&FACE JOIST: 18-10d	NFM35X12U	H:1-½" J-BOLT J:5-½" BOLTS	3,145	N/A
231	MBHA3.56/16	HDR : (2) ¾"Φ x 8" JOIST : 18-10d	NFM3.5X16U	HDR :MIN. ½"ΦxJ-BOLTS JOIST : (5) ½"Φ BOLTS	3,450	N/A
232	MBHA5.50/16	HDR : (2) ¾"Φ x 8" JOIST : 18-10d	NFM5.5X16U	HDR :MIN. ½"ΦxJ-BOLTS JOIST : (5) ½"Φ BOLTS	3,450	N/A
241	LGT2	30-16d-sinker	LUGT2	32-10d	2000	1015 / 440
242	LGT3	G: (12) SDS ¼:X2½"	N/A	W: (4) ⅜"X5" TITEN	2,365	N/A
243	LGT4-SDS3	G: (16) SDS ¼:X3"	N/A	W: (4) ⅜"X5" TITEN HD	2,365	N/A
301	MGT	(1) ¾"BLTS./GIR: 22-10d	N/A	N/A	3,965	N/A
302	HGT-2 or 3	LTL:¾"BLTS./GIR: 8-10d	USC63	LTL:¾"BLTS./GIR: 8-16d	6485	N/A
303	HGT-4	LTL:¾"BLTS./GIR: 16-10d	N/A	N/A	9,250	N/A
305	FGTR (2-PLY)	TRUSS: 36 SDS ½"X3" WALL:(4)½"X5" TITEN HD	N/A	N/A	9,400	N/A
401	SUR/L414	FACE:18-16d/JST:8-16d	N/A	N/A	1,700	N/A
501A	LSU26	6-10d - 5-10dX1½	N/A	N/A	535	N/A
501B	LSSU28	10-10d - 5-10dX1½	N/A	N/A	535	N/A
501C	LSSU210	10-10d - 7-10dX1½	N/A	N/A	875	N/A
502A	LSU26	6-10d - 5-10dX1½	N/A	N/A	535	N/A
502B	LSSU28	9-10d - 5-10dX1½	N/A	N/A	450	N/A
502C	LSSU210	9-10d - 7-10dX1½	N/A	N/A	785	N/A
503	HRC22	6-10dX1½ - 2-10dX1½	N/A	N/A	290	N/A
504	VPA2	8-10d - 2-10dX1½	N/A	N/A	295	375/250
505	HCP2	6-10dX1½ - 6-10dX1½	N/A	N/A	645	N/A
T	CONNECTORS TO BE SPECIFIED AND PROVIDED BY TRUSS MANUFACTURERS					

THIS STRUCTURE IS DESIGNED TO WITHSTAND 140 MPH WINDS PER THE 7th EDITION, 2020 OF THE FLORIDA BUILDING CODE RESIDENTIAL AND IS CERTIFIED AS SUCH

LOT: 0000, PARADISO GRANDE

© COPYRIGHT 2015 Park Square Homes hereby reserves its common law copyrights and other copyrights in these plans, ideas, and design. These plans, ideas and designs are not to be copied or changed in any manner or form whatsoever, nor are they to be assigned to any third party without first obtaining the express written permission from Park Square Homes.

PARADISO GRANDE

REVISIONS	BY
06-25-21	DH

Engineering By:
DBE and C
MICHAEL A. THOMPSON
PE 47509
PHONE 407-721-2292

A DIVISION OF PARK SQUARE ENTERPRISES, INC.
5200 Vineland Road, Suite 200
Orlando, Florida 32811
Phone: (407) 529 - 3000

Park Square HOMES

TYPICAL DETAILS / CONNECTOR SCHEDULE

SANDALWOOD

PARADISO GRANDE

4842

DATE	04-09-21
SCALE	AS NOTED
DRAWN	RDC
JOB	4842
SHEET	15
OF	00 SHEETS

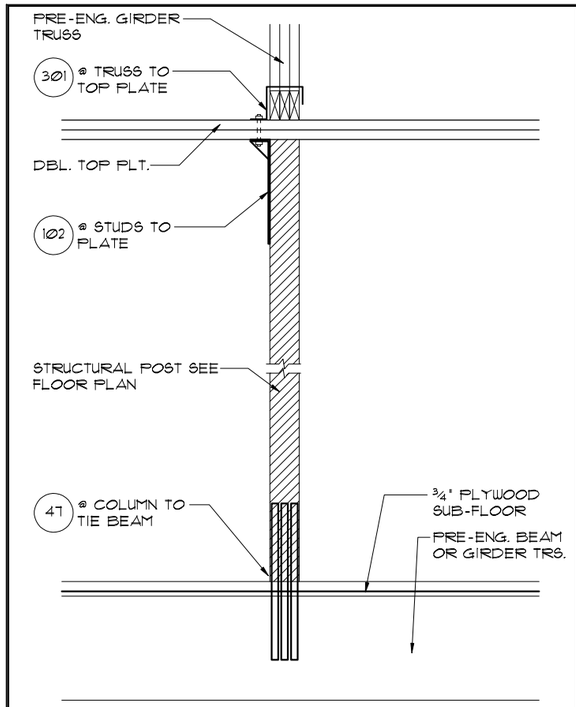

5/16 DETAIL
1/2"= 1'-0" (11X17) 1"= 1'-0" (22"X34")

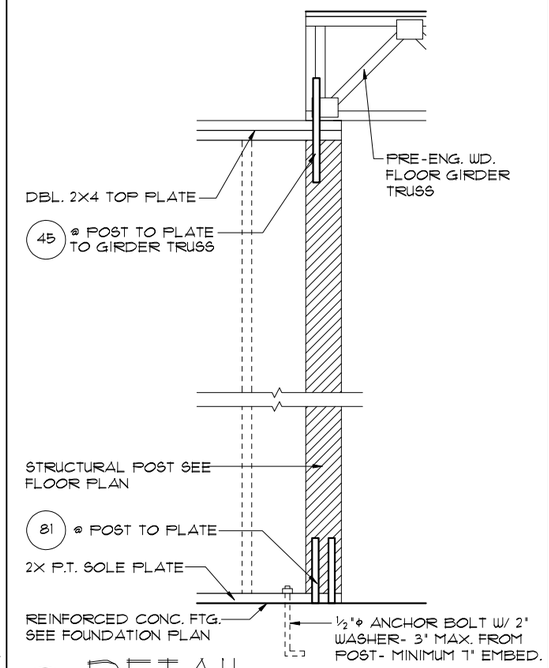

3/16 DETAIL
1/2"=1'-0" (11X17) 1"=1'-0" (22X34)

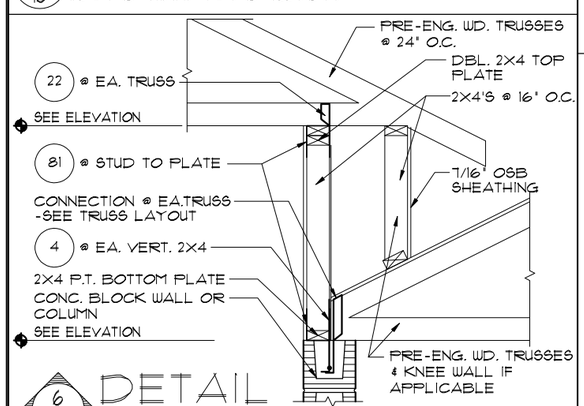

6/16 DETAIL
1/2"=1'-0" (11X17) 1"=1'-0" (22X34)

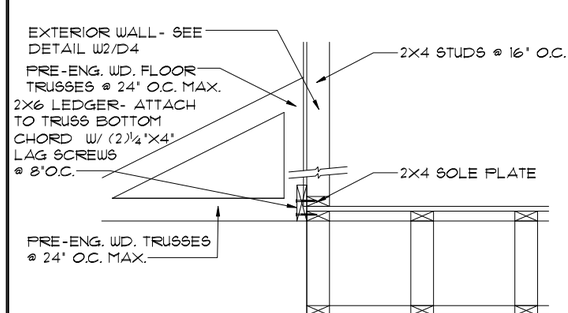

7/16 DETAIL
1/2"=1'-0" (11X17) 1"=1'-0" (22X34)

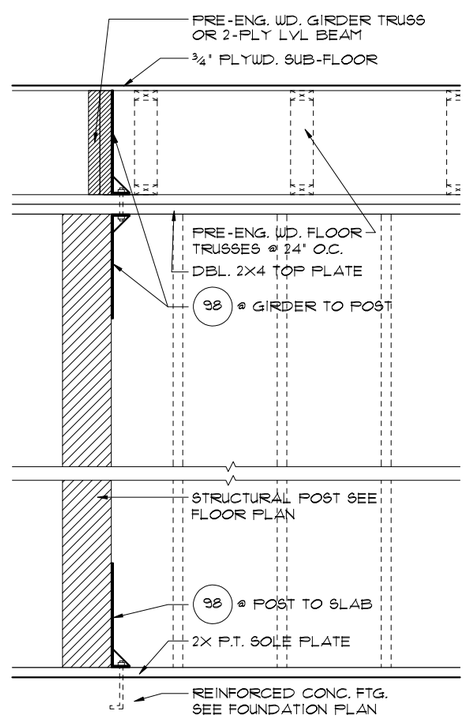

4/16 DETAIL
1/2"=1'-0" (11X17) 1"=1'-0" (22X34)

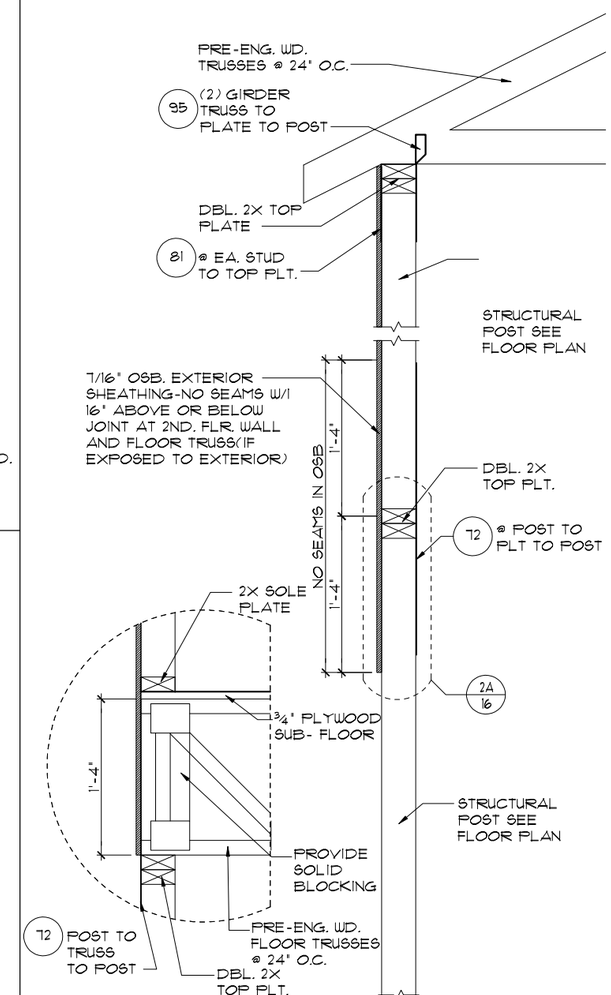

2A/16 ALT. FLOOR TRUSS
3/4"= 1'-0"

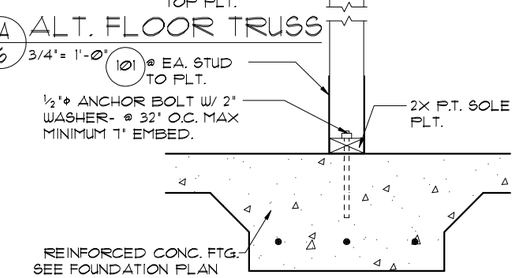

2/16 DETAIL
3/4"=1'-0" (11X17) 1½"=1'-0" (22X34)

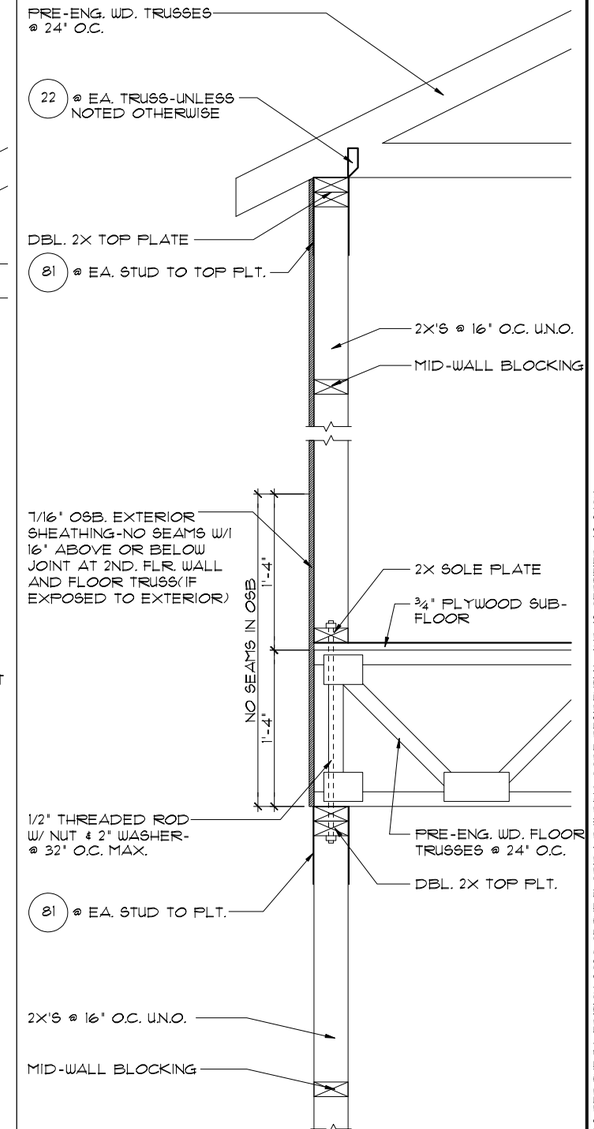

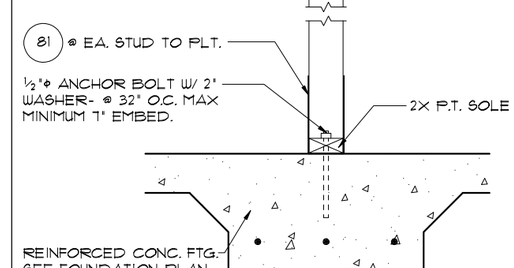

1/16 DETAIL
3/4"=1'-0" (11X17) 1½"=1'-0" (22X34)

THIS STRUCTURE IS DESIGNED TO WITHSTAND 140 MPH WINDS PER THE 7th EDITION, 2020 OF THE FLORIDA BUILDING CODE RESIDENTIAL AND IS CERTIFIED AS SUCH

LOT: 0000, PARADISO GRANDE

© COPYRIGHT 2015 Park Square Homes hereby reserves its common law copyrights and other copyrights in these plans, ideas, and design. These plans, ideas and designs are not to be copied or changed in any manner or form whatsoever, nor are they to be assigned to any third party without first obtaining the express written permission from Park Square Homes.

PARADISO GRANDE

REVISIONS	BY
06-25-21	DH

Engineering By:
DBE and C
MICHAEL A. THOMPSON
PE 47509
PHONE 407-721-2292

A DIVISION OF PARK SQUARE ENTERPRISES, INC.
5200 Vineland Road, Suite 200
Orlando, Florida 32811
Phone: (407) 529 - 3000

Park Square HOMES

TYPICAL DETAILS

SANDALWOOD
PARADISO GRANDE

4842

DATE	04-09-21
SCALE	AS NOTED
DRAWN	RDC
JOB	4842
SHEET	16
OF	00 SHEETS

SAFE LOAD TABLES

FOR GRAVITY, UPLIFT & LATERAL LOADS

8" PRECAST & PRESTRESSED U-LINTELS

GRAVITY

LENGTH \ TYPE	8U8	8F8-0B	8F12-0B	8F16-0B	8F20-0B	8F24-0B	8F28-0B	8F32-0B
		8F8-1B	8F12-1B	8F16-1B	8F20-1B	8F24-1B	8F28-1B	8F32-1B
2'-10" (34") PRECAST	2302	3166	4473	6039	7526	9004	10472	11936
		3166	4473	6039	7526	9004	10472	11936
3'-6" (42") PRECAST	2302	3138	3371	4893	6091	7319	8630	9947
		3166	4473	6039	7526	9004	10472	11936
4'-0" (48") PRECAST	2079	2325	2496	3467	4438	5410	6384	7358
		2646	4473	6039	7526	9004	10472	11936
4'-6" (54") PRECAST	1651	1787	1913	2657	3403	4149	4896	5644
		2710	4021	6039	7526	9004	10472	9668
5'-4" (64") PRECAST	1184	1223	1301	1809	2317	2826	3336	3846
		1665	2889	5057	6096	5400	6424	7450
5'-10" (70") PRECAST	972	1000	1059	1474	1889	2304	2721	3137
		1459	2464	4144	5458	4437	5280	6122
6'-6" (78") PRECAST	837	1255	2101	3263	2746	3358	3971	4585
		1255	2101	3396	5260	7134	8935	6890
7'-6" (90") PRECAST	767	1025	1675	2389	1934	2439	2886	3333
		1025	1675	2610	3839	5596	6613	5047
9'-4" (112") PRECAST	573	632	1049	1469	1210	1482	1754	2027
		768	1212	1818	2544	3469	4030	3127
10'-6"(126") PRECAST	456	482	802	1125	915	1122	1328	1535
		658	1025	1514	2081	2714	3130	2404
11'-4" (136") PRECAST	445	598	935	1365	1854	2355	1793	2075
		598	935	1365	1854	2441	3155	4044
12'-0"(144") PRECAST	414	545	864	1254	1683	2074	1570	1818
		555	864	1254	1693	2211	2832	3590
13'-4" (160") PRECAST	362	427	726	1028	1331	1635	1224	1418
		485	748	1076	1438	1855	2343	2920
14'-0"(168") PRECAST	338	381	648	938	1190	1462	1087	1260
		455	700	1003	1335	1714	2153	2666
14'-8" (176") PRESTRESSED	N.R.	NR	NR	NR	NR	NR	NR	NR
		465	765	1370	2045	2610	3185	3765
15'-4" (184") PRESTRESSED	N.R.	NR	NR	NR	NR	NR	NR	NR
		420	655	1250	1855	2370	2890	3410
17'-4" (208") PRESTRESSED	N.R.	NR	NR	NR	NR	NR	NR	NR
		310	530	950	1400	1800	2200	2600
19'-4" (232") PRESTRESSED	N.R.	NR	NR	NR	NR	NR	NR	NR
		240	400	750	1090	1400	1720	2030
21'-4" (256") PRESTRESSED	N.R.	NR	NR	NR	NR	NR	NR	NR
		183	330	610	940	1340	1780	2110
22'-0" (264") PRESTRESSED	N.R.	NR	NR	NR	NR	NR	NR	NR
		160	300	570	870	1230	1660	1970
24'-0" (288") PRESTRESSED	N.R.	NR	NR	NR	NR	NR	NR	NR
		130	240	470	720	1030	1350	1610

8" PRECAST W/ 2" RECESS DOOR U-LINTELS

GRAVITY

LENGTH \ TYPE	8RU6	8RF6-0B	8RF10-0B	8RF14-0B	8RF18-0B	8RF22-0B	8RF26-0B	8RF30-0B
		8RF6-1B	8RF10-1B	8RF14-1B	8RF18-1B	8RF22-1B	8RF26-1B	8RF30-1B
4'-4" (52") PRECAST	1489	1591	3053	2982	3954	4929	5904	6880
		1827	3412	4982	6472	7947	9416	10878
4'-6" (54") PRECAST	1357	1449	2782	2714	3600	4487	5375	6264
		1702	3412	4982	6472	7947	9416	10878
5'-8" (68") PRECAST	788	832	1602	1550	2058	2566	3075	3585
		1153	2162	4074	6472	6516	5814	6839
5'-10" (70") PRECAST	735	779	1500	1449	1924	2400	2876	3352
		1103	2051	3811	6472	6516	5450	6411
6'-8" (80") PRECAST	622	667	1671	2933	2576	3223	3872	4522
		667	1671	2933	4100	6130	8177	6767
7'-6" (90") PRECAST	665	761	1377	2292	1958	2451	2944	3439
		764	1377	2329	3609	5492	6624	5132
9'-8" (116") PRECAST	371	420	834	1253	1671	1342	1614	1886
		535	928	1497	2178	2618	3595	2875

8" PRECAST & PRESTRESSED U-LINTELS

UPLIFT

LENGTH \ TYPE	8F8-1T	8F12-1T	8F16-1T	8F20-1T	8F24-1T	8F28-1T	8F32-1T	LATERAL 8U8	LATERAL 8F8
	8F8-2T	8F12-2T	8F16-2T	8F20-2T	8F24-2T	8F28-2T	8F32-2T		
2'-10" (34") PRECAST	2727	2878	4101	5332	6569	7811	9055	2021	2021
	2727	2784	3981	5180	6407	7630	8857		
3'-6" (42") PRECAST	2165	2289	3260	4237	5219	6204	7192	1257	1257
	2165	2215	3165	4125	5081	6061	7036		
4'-0" (48") PRECAST	1878	1986	2832	3680	4532	5381	6245	938	938
	1878	1925	2750	3583	4422	5264	6110		
4'-6" (54") PRECAST	1660	1762	2507	3257	4010	4767	5525	727	727
	1660	1705	2435	3171	3913	4658	5406		
5'-4" (64") PRECAST	1393*	1484	2110	2741	3375	4010	4648	509	509
	1393	1437	2050	2670	3293	3920	4549		
5'-10" (70") PRECAST	1272*	1357	1930	2509	3094	3665	4247	418	418
	1272	1315	1875	2441	3010	3583	4157		
6'-6" (78") PRECAST	1141*	1200	1733	2250	2769	3290	3812	1071	887
	1141	1182	1684	2192	2703	3216	3732		
7'-6" (90") PRECAST	959*	912	1475	1914	2354	2797	3240	591	657
	959	1029	1466	1907	2351	2797	3245		
9'-4" (112") PRECAST	801*	612	980	1269	1560	1852	2144	454	630
	801	755	1192	1550	1910	2271	2634		
10'-6"(126") PRECAST	716*	498	793	1027	1261	1496	1731	396	493
	716	611	1039	1389	1711	2034	2358		
11'-4" (136") PRECAST	666*	439	696	899	1104	1309	1515	363	556
	666	535	909	1215	1495	1896	2198		
12'-0"(144") PRECAST	607*	400	631	816	1001	1186	1372	340	494
	631	486	818	1209	1514	1739	2066		
13'-4" (160") PRECAST	573	409	682	1004	1367	1631	1897	302	398
	500*	340	532	686	841	997	1153		
14'-0"(168") PRECAST	458*	316	493	635	778	922	1065	286	360
	548	378	629	922	1254	1567	1816		
14'-8" (176") PRESTRESSED	243	295	459	591	724	857	990	N.R.	357
	243	352	582	852	1156	1491	1742		
15'-4" (184") PRESTRESSED	228	278	430	553	677	801	925	N.R.	327
	228	329	542	791	1072	1381	1676		
17'-4" (208") PRESTRESSED	188	236	361	464	567	670	774	N.R.	255
	188	276	449	649	874	1121	1389		
19'-4" (232") PRESTRESSED	165	207	313	401	490	578	667	N.R.	204
	165	239	383	550	736	940	1160		
21'-4" (256") PRESTRESSED	145	186	278	356	433	512	590	N.R.	172
	142	212	336	477	635	807	983		
22'-0" (264") PRESTRESSED	140	180	268	343	418	493	568	N.R.	161
	137	205	322	457	607	771	947		
24'-0" (288") PRESTRESSED	127	165	244	312	380	447	515	N.R.	135
	124	186	290	408	538	680	833		

*REDUCE VALUE BY 25% FOR GRADE 40 FIELD REBAR

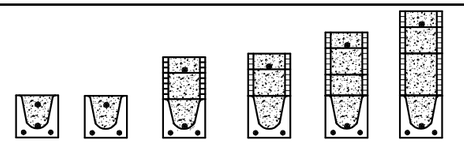

TYPE DESIGNATION

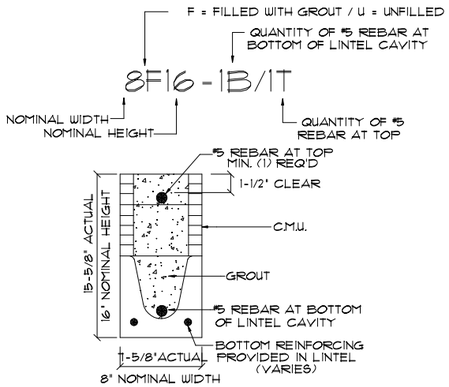

MATERIALS

1. f'c precast lintels = 3500 psi.
2. f'c prestressed lintels = 6000 psi.
3. f'c grout = 3000 psi w/ maximum 3/8" aggregate.
4. Concrete masonry units (CMU) per ASTM C90 w/ minimum net area compressive strength = 1900 psi.
5. Rebar provided in precast lintel per ASTM A615 GR60. Field rebar per ASTM A615 GR40 or GR60.
6. Prestressing strand per ASTM A416 grade 270 low relaxation.
7. 7/32 wire per ASTM A510.
8. Mortar per ASTM C270 type M or S.

GENERAL NOTES

1. Provide full mortar head and bed joints.
2. Shore filled lintels as required.
3. Installation of lintel must comply with the architectural and/or structural drawings.
4. Lintels are manufactured with 5-1/2" long notches at the ends to accommodate vertical cell reinforcing and grouting.
5. All lintels meet or exceed L/360 vertical deflection, except lintels 17'-4" and longer with a nominal height of 8" meet or exceed L/180.
6. Bottom field added rebar to be located at the bottom of the lintel cavity.
7. 7/32" diameter wire stirrups are welded to the bottom steel for mechanical anchorage.
8. Cast-in-place concrete may be provided in composite lintel in lieu of concrete masonry units.
9. Safe load ratings based on rational design analysis per ACI 318 and ACI 530

SAFE LOAD TABLE NOTES

1. All values based on minimum 4" bearing. Exception: Safe loads for unfilled lintels must be reduced by 20% if bearing length is less than 6-1/2". Safe loads for all recessed lintels based on 8" nominal bearing.
2. N.R. = Not Rated.
3. Safe loads are total superimposed allowable load on the section specified.
4. Safe loads based on grade 40 or grade 60 field rebar.
5. Additional lateral load capacity can be obtained by the designer by providing addional reinforced masonry above the precast lintel.
6. One #7 rebar may be substituted for two #5 rebars in 8" lintels only.
7. The designer may evaluate concentrated loads from the safe load tables by calculating the maximum resisting moment and shear at d-away from the face of support.
8. For composite lintel heights not shown, use safe load from next lower height.
9. All safe loads in units of pounds per linear foot.

8" PRECAST W/ 2" RECESS DOOR U-LINTELS

UPLIFT

LENGTH \ TYPE	8RF6-1T	8RF10-1T	8RF14-1T	8RF18-1T	8RF22-1T	8RF26-1T	8RF30-1T	LATERAL 8RU6	LATERAL 8RF6
	8RF6-2T	8RF10-2T	8RF14-2T	8RF18-2T	8RF22-2T	8RF26-2T	8RF30-2T		
4'-4" (52") PRECAST	1244	1573	2413	3260	4112	4967	5825	932	932
	1244	1519	2339	3170	4008	4850	5696		
4'-6" (54") PRECAST	1192	1507	2311	3121	3937	4756	5577	853	853
	1192	1455	2240	3036	3837	4643	5453		
5'-8" (68") PRECAST	924*	1172	1795	2423	3055	3689	4325	501	501
	924	1132	1741	2351	2978	3603	4230		
5'-10" (70") PRECAST	896*	1136	1742	2352	2965	3581	4198	469	469
	896	1093	1680	2268	2891	3497	4106		
6'-8" (80") PRECAST	778	882	1513	2042	2573	3107	3642	830	1100
	778	956	1468	1981	2509	3035	3563		
7'-6" (90") PRECAST	688	697	1325	1810	2280	2753	3227	710	941
	688	849	1302	1762	2225	2690	3157		
9'-8" (116") PRECAST	533*	433	808	1123	1413	1704	1995	516	614
	533	527	1009	1369	1728	2088	2450		

*REDUCE VALUE BY 25% FOR GRADE 40 FIELD REBAR

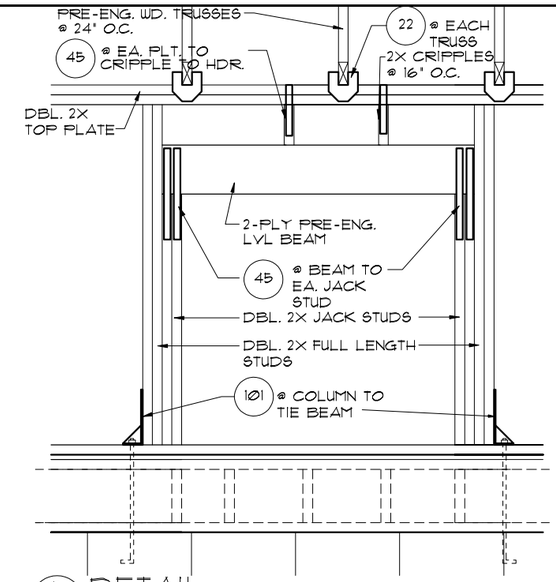

5/17 DETAIL
1/8"=1'-0" (11X17) 1/4"=1'-0" (22X34)

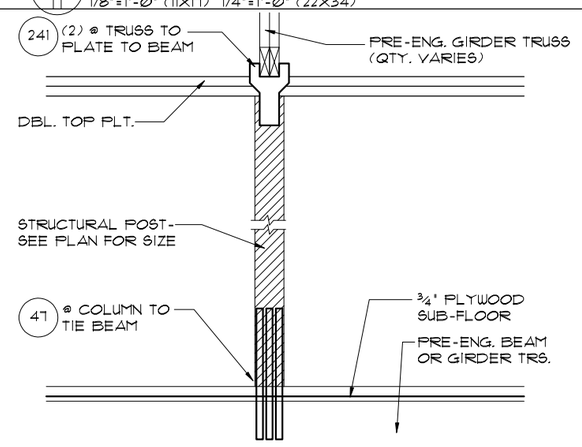

2/17 DETAIL
1/2"= 1'-0" (11X17) 1"= 1'-0" (22"X34")

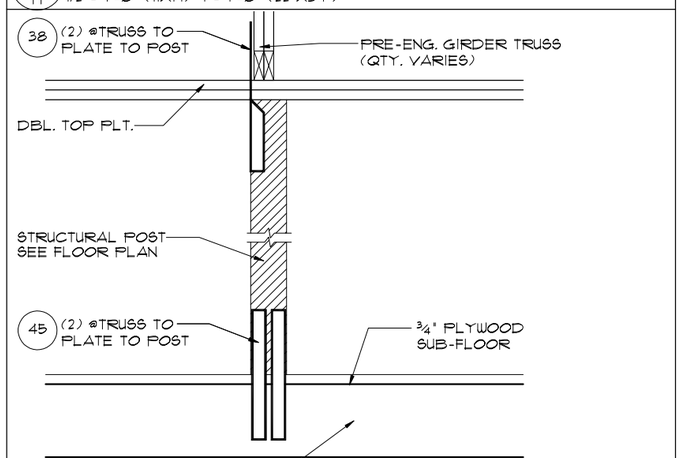

4/17 DETAIL
1/2"=1'-0" (11X17) 1"=1'-0" (22X34)

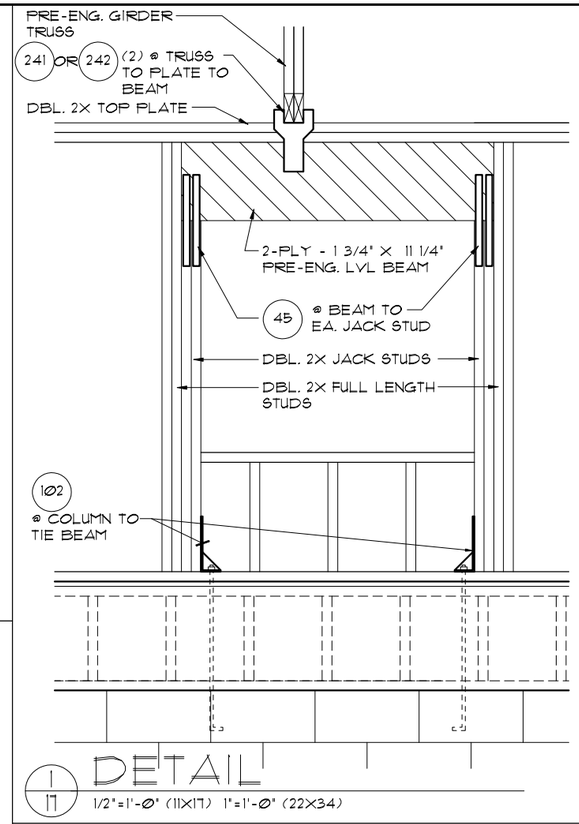

1/17 DETAIL
1/2"=1'-0" (11X17) 1"=1'-0" (22X34)

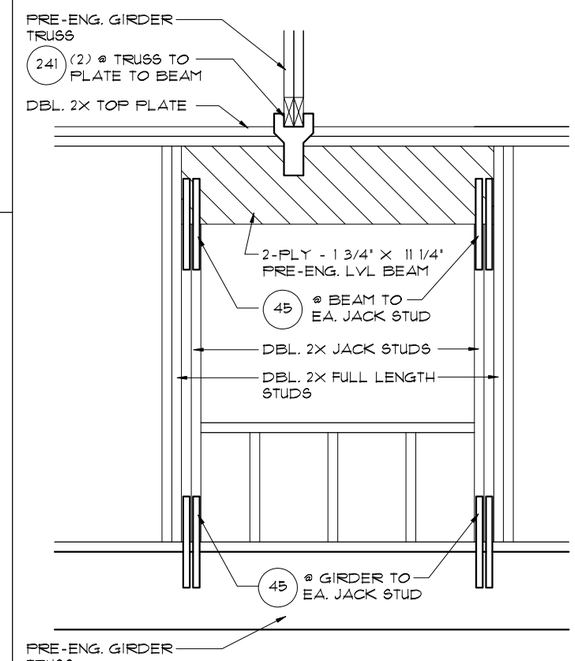

3/17 DETAIL
1/2"=1'-0" (11X17) 1"=1'-0" (22X34)

THIS STRUCTURE IS DESIGNED TO WITHSTAND 140 MPH WINDS PER THE 7th EDITION, 2020 OF THE FLORIDA BUILDING CODE RESIDENTIAL AND IS CERTIFIED AS SUCH

LOT: 0000, PARADISO GRANDE

© COPYRIGHT 2015
Park Square Homes hereby reserves its common law copyrights and other copyrights in these plans, ideas, and design. These plans, ideas and designs are not to be copied or changed in any manner or form whatsoever, nor are they to be assigned to any third party without first obtaining the express written permission from Park Square Homes.

PARADISO GRANDE

REVISIONS	BY
06-25-21	DH

Engineering By:
DBE and C
MICHAEL A. THOMPSON
PE 47509
PHONE 407-721-2292

A DIVISION OF PARK SQUARE ENTERPRISES, INC.
5200 Vineland Road, Suite 200
Orlando, Florida 32811
Phone: (407) 529 - 3000

Park Square HOMES

PRE CAST LINTEL DATA / STRUCTURAL DETAILS

SANDALWOOD

PARADISO GRANDE

4842

DATE 04-09-21

SCALE AS NOTED

DRAWN RDC

JOB 4842

SHEET 17 OF 00 SHEETS

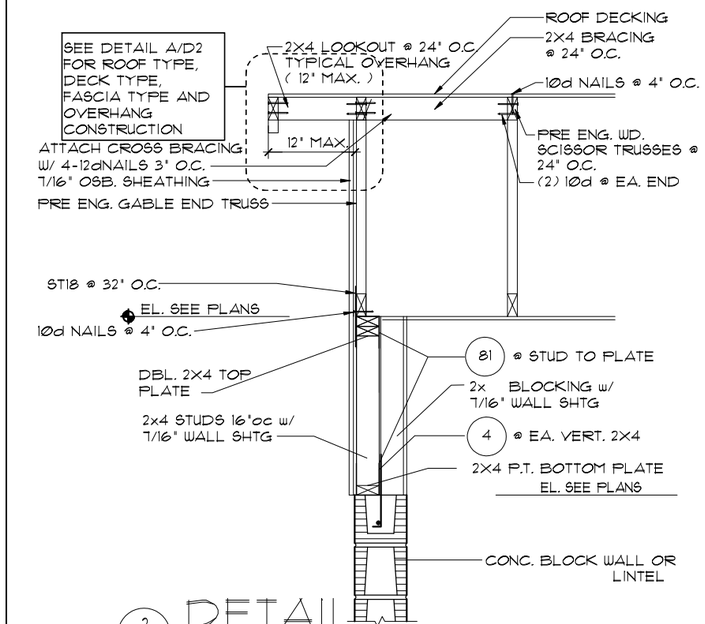

2/18 DETAIL

1/2"=1'-0" (11X17) 1"=1'-0" (22X34)

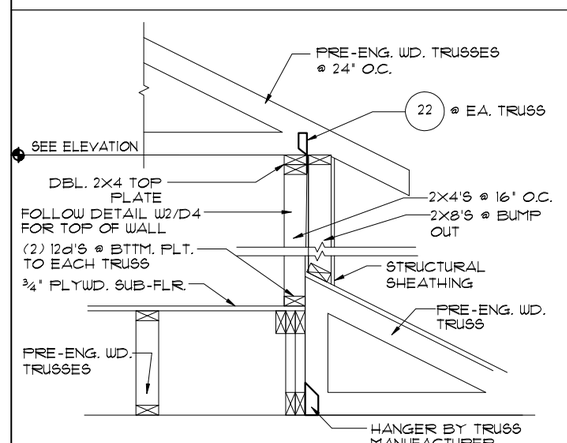

3/18 DETAIL

1/2"=1'-0" (11X17) 1"=1'-0" (22X34)

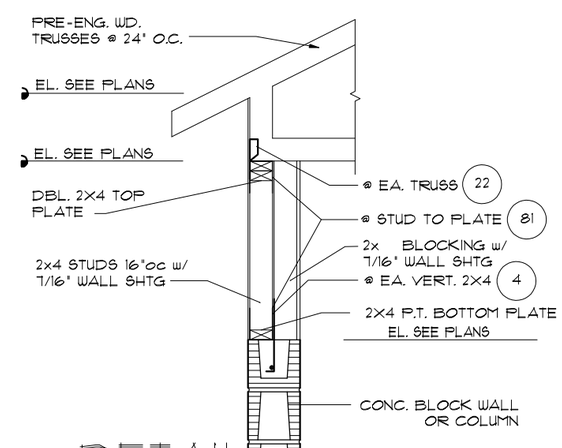

1/18 DETAIL

1/2"=1'-0" (11X17) 1"=1'-0" (22X34)

THIS STRUCTURE IS DESIGNED TO WITHSTAND 140 MPH WINDS PER THE 7th EDITION, 2020 OF THE FLORIDA BUILDING CODE RESIDENTIAL AND IS CERTIFIED AS SUCH

LOT: 0000, PARADISO GRANDE

© COPYRIGHT 2015 Park Square Homes hereby reserves its common law copyrights and other copyrights in these plans, ideas, and design. These plans, ideas and designs are not to be copied or changed in any manner or form whatsoever, nor are they to be assigned to any third party without first obtaining the express written permission from Park Square Homes.

PARADISO GRANDE

REVISIONS	BY
06-25-21	DH

Engineering By:
DBE and C
MICHAEL A. THOMPSON
PE 47509
PHONE 407-721-2292

A DIVISION OF PARK SQUARE ENTERPRISES, INC.
5200 Vineland Road, Suite 200
Orlando, Florida 32811
Phone: (407) 529 - 3000

Park Square HOMES

TYPICAL DETAILS

SANDALWOOD

PARADISO GRANDE

4842

DATE	04-09-21
SCALE	AS NOTED
DRAWN	RDC
JOB	4842
SHEET	18
OF	00 SHEETS