5803T (A,C,D)

THE CARRARA II-SIDE LOAD

SIGNATURE SERIES

REVISION SCHEDULE			
NO.	DATE	DESCRIPTION	BY
1	05-29-20	-DELETE LAUNDRY CHUTE	RDC
		-ADD STORAGE CLOSET UPSTAIRS	
		-DELETE OPENINGS IN WALL NEXT TO STAIRS	
		-ADD STEP UP OPTIONS IN THEATER	
		-SQUARE OFF ALL ARCHED OPENINGS	
		-ADD STORAGE CLOSET NEXT TO LAUNDRY RM.	
		-DELETE COFF. CLG. AT GREAT RM.	
		-CHANGE M. BR. CLG TO SGL. COFF.	
		-DELETE CENTER COLUMN AT ENTRY TO DINING	
		-CHANGE WALLS AT M.BR. CLOSET TO 4"	
		-FURR OUT WALL AT FOYER TO MATCH UPSTAIRS	
		-ADD WINDOW TO MASTER SUITE	
		-DELETE NICHE AT HALL TO BONUS 1	
		-DELETE FRAMED OPENING AT FOYER	
2	08-06-20	-RELOCATE ATTIC ACCESS	TE
		-ENLARGE A/C CHASE & MAKE CLOSET SMALLER	
3	02-18-21	UPDATE TO CODE 2020	TN

SHEET INDEX- ELEVATION "A"

00	COVER SHEET
01A.1	FOUNDATION PLAN
02A.1	FLOOR PLAN W/ DIMENSIONS
03A.1	FLOOR PLAN W/ NOTES
04A.1	UPPER FLOOR PLAN W/ DIMENSIONS
05A.1	UPPER FLOOR PLAN W/ NOTES
06A.1	EXTERIOR ELEVATIONS- FRONT/ REAR
07A.1	EXTERIOR ELEVATIONS- LEFT/ RIGHT
08.0	INTERIOR ELEVATIONS
08.1	CROSS SECTION
09A.1	ELECTRICAL PLAN
10A.1	UPPER ELECTRICAL PLAN
11A.1	TRUSS LAYOUT
12A.1	UPPER TRUSS LAYOUT
13A.1	PRECAST LINTEL LAYOUT
14	TYPICAL DETAILS/CONNECTOR SCHEDULE
15	TYPICAL DETAILS
16	TYPICAL DETAILS
17	TYPICAL DETAILS
18	TYPICAL DETAILS/PRE CAST LINTEL DATA
19	TYPICAL DETAILS
D1	TYPICAL STRUCTURAL DETAILS
D2	TYPICAL STRUCTURAL DETAILS
D3	TYPICAL STRUCTURAL DETAILS
D4	TYPICAL STRUCTURAL DETAILS
D5	TYPICAL STRUCTURAL DETAILS

SHEET INDEX- ELEVATION "C"

00	COVER SHEET
01C.1	FOUNDATION PLAN
02C.1	FLOOR PLAN W/ DIMENSIONS
03C.1	FLOOR PLAN W/ NOTES
04C.1	UPPER FLOOR PLAN W/ DIMENSIONS
05C.1	UPPER FLOOR PLAN W/ NOTES
06C.1	EXTERIOR ELEVATIONS- FRONT/ REAR
07C.1	EXTERIOR ELEVATIONS- LEFT/ RIGHT
08.0	INTERIOR ELEVATIONS
08.1	CROSS SECTION
09C.1	ELECTRICAL PLAN
10C.1	UPPER ELECTRICAL PLAN
11C.1	TRUSS LAYOUT
12C.1	UPPER TRUSS LAYOUT
13C.1	PRECAST LINTEL LAYOUT
14	TYPICAL DETAILS/CONNECTOR SCHEDULE
15	TYPICAL DETAILS
16	TYPICAL DETAILS
17	TYPICAL DETAILS
18	TYPICAL DETAILS/PRE CAST LINTEL DATA
19	TYPICAL DETAILS
D1	TYPICAL STRUCTURAL DETAILS
D2	TYPICAL STRUCTURAL DETAILS
D3	TYPICAL STRUCTURAL DETAILS
D4	TYPICAL STRUCTURAL DETAILS
D5	TYPICAL STRUCTURAL DETAILS

SHEET INDEX- ELEVATION "D"

00	COVER SHEET
01D.1	FOUNDATION PLAN
02D.1	FLOOR PLAN W/ DIMENSIONS
03D.1	FLOOR PLAN W/ NOTES
04D.1	UPPER FLOOR PLAN W/ DIMENSIONS
05D.1	UPPER FLOOR PLAN W/ NOTES
06D.1	EXTERIOR ELEVATIONS- FRONT/ REAR
07D.1	EXTERIOR ELEVATIONS- LEFT/ RIGHT
08.0	INTERIOR ELEVATIONS
08.1	CROSS SECTION
09D.1	ELECTRICAL PLAN
10D.1	UPPER ELECTRICAL PLAN
11D.1	TRUSS LAYOUT
12D.1	UPPER TRUSS LAYOUT
13D.1	PRECAST LINTEL LAYOUT
14	TYPICAL DETAILS/CONNECTOR SCHEDULE
15	TYPICAL DETAILS
16	TYPICAL DETAILS
17	TYPICAL DETAILS
18	TYPICAL DETAILS/PRE CAST LINTEL DATA
19	TYPICAL DETAILS
D1	TYPICAL STRUCTURAL DETAILS
D2	TYPICAL STRUCTURAL DETAILS
D3	TYPICAL STRUCTURAL DETAILS
D4	TYPICAL STRUCTURAL DETAILS
D5	TYPICAL STRUCTURAL DETAILS

THIS STRUCTURE IS DESIGNED TO WITHSTAND 150 MPH WINDS PER THE 7th EDITION, 2020 OF THE FLORIDA BUILDING CODE RESIDENTIAL AND IS CERTIFIED AS SUCH

LOT SPECIFIC INFORMATION

© COPYRIGHT 2012
Park Square Homes hereby reserves its common law copyrights and other copyrights in these plans, ideas, and design. These plans, ideas and designs are not to be copied or changed in any manner or form whatsoever, nor are they to be assigned to any third party without first obtaining the express written permission from Park Square Homes.

SIGNATURE SERIES

REVISIONS	BY
05-29-20	RDC

Engineering By:
DBE and C
MICHAEL A. THOMPSON
PE 47509
PHONE 407-721-2292

A DIVISION OF PARK SQUARE ENTERPRISES, INC.
5200 Vineland Road, Suite 200
Orlando, Florida 32811
Phone: (407) 529 - 3000

Park Square HOMES

COVER SHEET

5803T-SIDE LOAD

THE CARRARA II

DATE	09-01-14
SCALE	AS NOTED
DRAWN	RDC
JOB	N/A
SHEET	00
OF	SHEETS

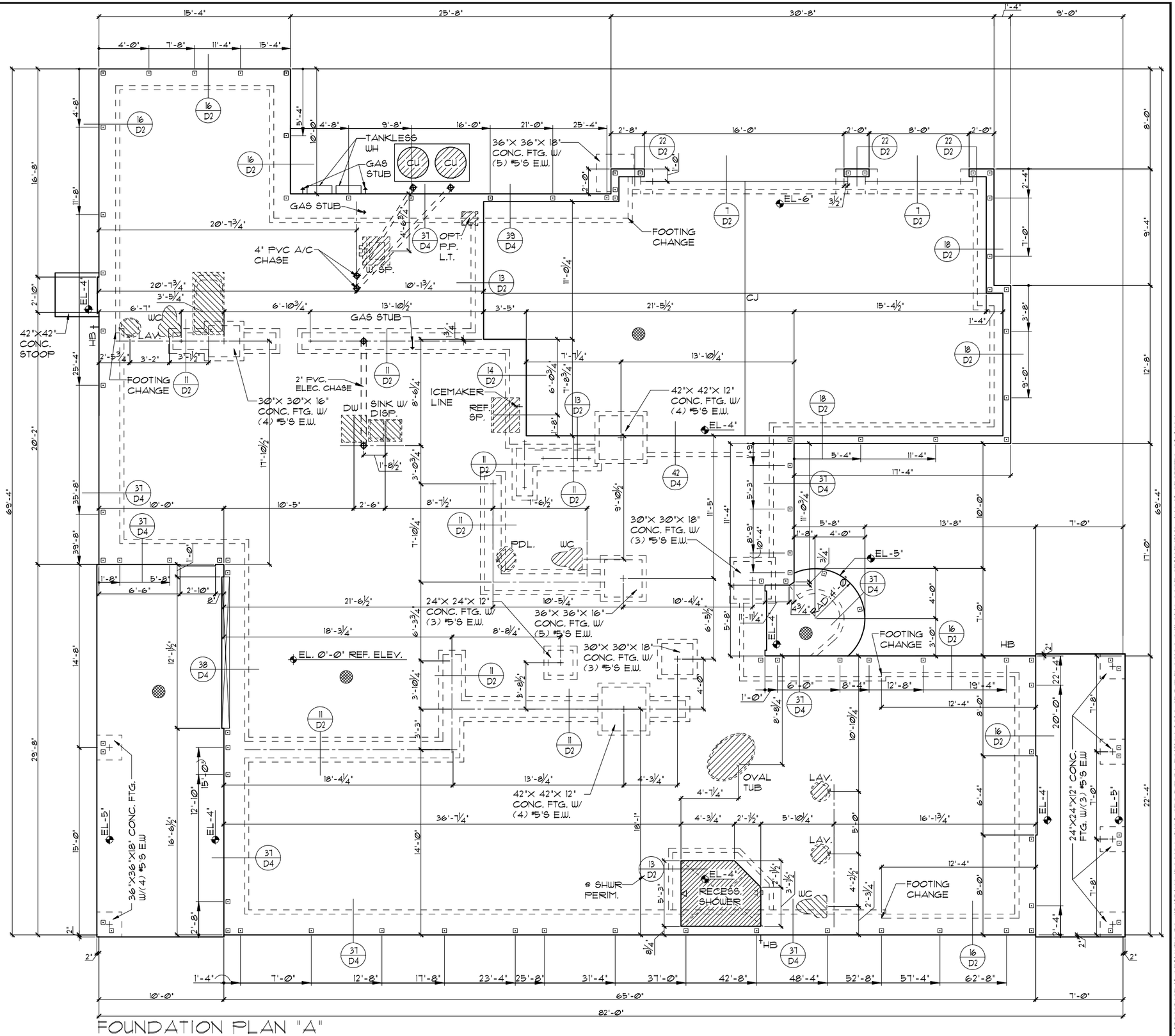

FOUNDATION PLAN "A"

1/8"=1'-0" (11X17) 1/4"=1'-0" (22X34)

FOUNDATION NOTES

1. CONTRACTOR VERIFY ALL DIMENSIONS ON JOB SITE.
2. ⊡ DENOTES FILL CELL REINF. W/ CONC. W/ (1) #5φ REBAR. GRADE 60
3. ■ DENOTES FILL CELL REINF. W/ CONC. W/ (2) #5φ REBAR. GRADE 60
4. DO NOT SCALE PRINTS! CONSTRUCTION TO BE FROM CALCULATED DIMENSIONS ONLY. ANY DISCREPANCIES OR ERRORS TO BE REPORTED PROMPTLY TO SUPERVISOR FOR CLARIFICATION.
5. WATER HEATER T & P RELIEF VALVE SHALL BE FULL SIZE TO EXTERIOR. WATER HEATER AT OR ABOVE FLOOR LEVEL SHALL BE IN A PAN WITH DRAIN TO EXTERIOR. WATER HEATER SHALL HAVE APPROVED THERMAL EXPANSION DEVICE.
6. ▩ DENOTES FLOOR SLAB OF PLANT MIX CONCRETE 2500 P.S.I. 4" THICK WITH 6X6 10/10 GAUGE REINFORCING MAT. WITH MIN. 1" COVER. TERMITE TREATED SOIL WITH .006mm (6 mil) POLYETHYLENE VAPOR BARRIER OVER COMPACTED CLEAN FILL. WWF SHALL BE PLACED IN MIDDLE TO UPPER THIRD OF SLAB AND SUPPORTED ON APPROVED SLAB BOLSTERS. *FIBER MESH REINFORCEMENT MAY BE USED AS ALTERNATIVE TO WIRE MESH.
7. PAVERS MAY BE USED ILO CONCRETE SLABS IN PATIO, PORCH, DRIVE AND WALKWAY AREAS. DELETE SLAB IN AREAS PAVERS ARE USED.
8. ~~16/D2 STANDARD FOOTING~~ ~~1/D2 ALTERNATE FOOTING~~ NOTE #8 NOT USED
9. MECHANICAL EQUIP. LOCATIONS WILL BE DETERMINED BY COMMUNITY AND COUNTY CODES.
10. IN LIEU OF TREATING THE SOIL, AN ALTERNATIVE TO TERMITE TREATED SOIL CAN BE TERMICIDE.
11. BORA-CARE TO BE APPLIED ON INTERIOR WALLS IAW MANUFACTURER'S INSTRUCTIONS AND SPECIFICATIONS, PURSUANT TO CH.482 FLORDA BUILDING CODE.

THIS STRUCTURE IS DESIGNED TO WITHSTAND 150 MPH WINDS PER THE 7th EDITION, 2020 OF THE FLORIDA BUILDING CODE RESIDENTIAL AND IS CERTIFIED AS SUCH

LOT SPECIFIC INFORMATION

© COPYRIGHT 2012
Park Square Homes hereby reserves its common law copyrights and other copyrights in these plans, ideas, and design. These plans, ideas and designs are not to be copied or changed in any manner or form whatsoever, nor are they to be assigned to any third party without first obtaining the express written permission from Park Square Homes.

SIGNATURE SERIES

REVISIONS	BY
05-29-20	RDC

Engineering By:
DBE and C
MICHAEL A. THOMPSON
PE 47509
PHONE 407-721-2292

A DIVISION OF PARK SQUARE ENTERPRISES, INC.
5200 Vineland Road, Suite 200
Orlando, Florida 32811
Phone: (407) 529 - 3000

Park Square HOMES

FOUNDATION PLAN

5803T-SIDE LOAD

THE CARRARA II

DATE	09-01-14
SCALE	AS NOTED
DRAWN	RDC
JOB	N/A
SHEET	01A.1
OF	SHEETS

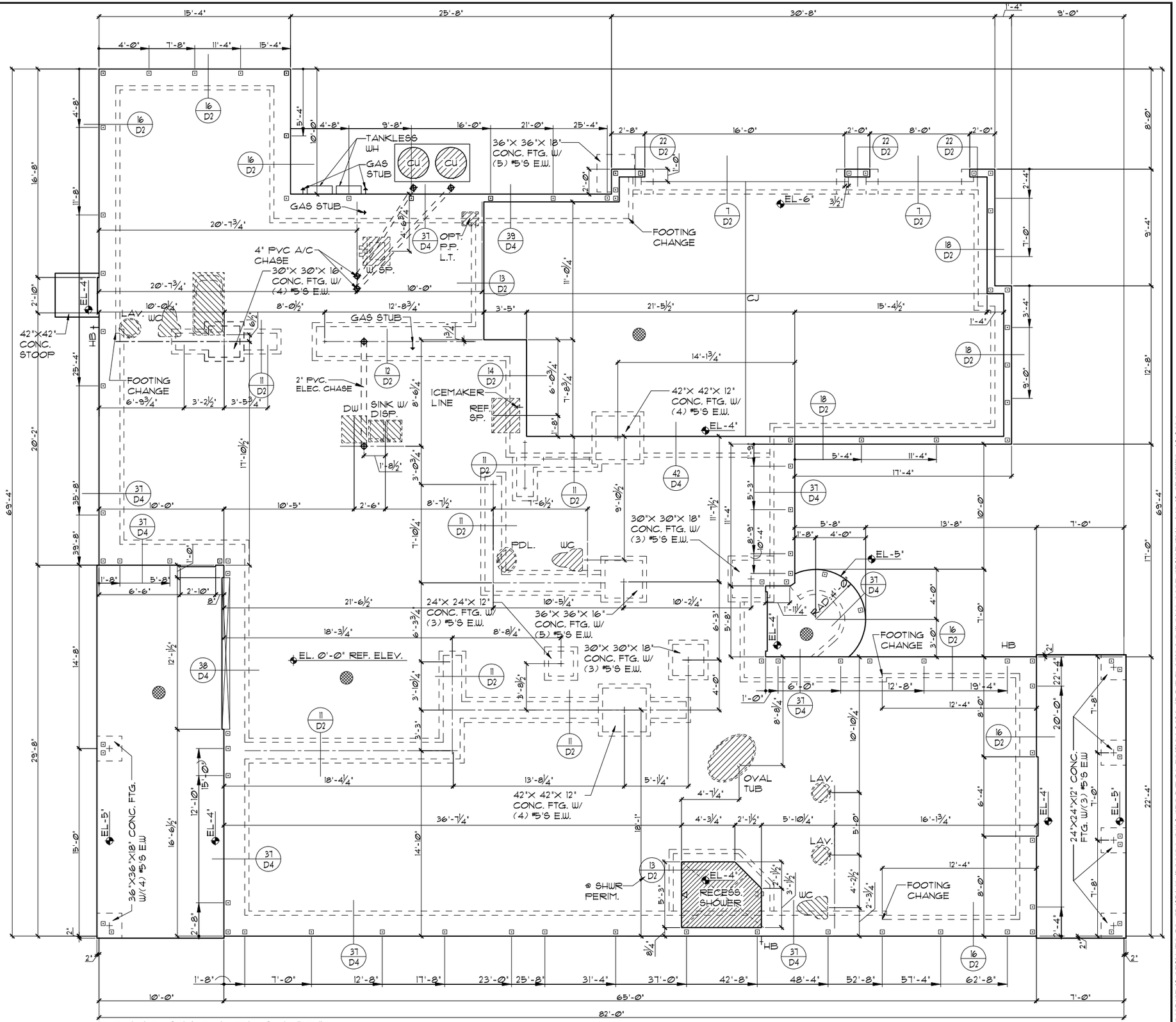

FOUNDATION PLAN "C"

1/8"=1'-0" (11X17) 1/4"=1'-0" (22X34)

FOUNDATION NOTES

1. CONTRACTOR VERIFY ALL DIMENSIONS ON JOB SITE.
2. ⊡ DENOTES FILL CELL REINF. W/ CONC. W/ (1) #5φ REBAR. GRADE 60
3. ■ DENOTES FILL CELL REINF. W/ CONC. W/ (2) #5φ REBAR. GRADE 60
4. DO NOT SCALE PRINTS! CONSTRUCTION TO BE FROM CALCULATED DIMENSIONS ONLY. ANY DISCREPANCIES OR ERRORS TO BE REPORTED PROMPTLY TO SUPERVISOR FOR CLARIFICATION.
5. WATER HEATER T & P RELIEF VALVE SHALL BE FULL SIZE TO EXTERIOR. WATER HEATER AT OR ABOVE FLOOR LEVEL SHALL BE IN A PAN WITH DRAIN TO EXTERIOR. WATER HEATER SHALL HAVE APPROVED THERMAL EXPANSION DEVICE.
6. ▩ DENOTES FLOOR SLAB OF PLANT MIX CONCRETE 2500 P.S.I. 4" THICK WITH 6X6 10/10 GAUGE REINFORCING MAT. WITH MIN. 1" COVER. TERMITE TREATED SOIL WITH .006mm (6 mil) POLYETHYLENE VAPOR BARRIER OVER COMPACTED CLEAN FILL. WWF SHALL BE PLACED IN MIDDLE TO UPPER THIRD OF SLAB AND SUPPORTED ON APPROVED SLAB BOLSTERS. *FIBER MESH REINFORCEMENT MAY BE USED AS ALTERNATIVE TO WIRE MESH.
7. PAVERS MAY BE USED ILO CONCRETE SLABS IN PATIO, PORCH, DRIVE AND WALKWAY AREAS. DELETE SLAB IN AREAS PAVERS ARE USED.
8. ~~(16/D2) STANDARD FOOTING~~ ~~(1/D2) ALTERNATE FOOTING~~ NOTE #8 NOT USED
9. MECHANICAL EQUIP. LOCATIONS WILL BE DETERMINED BY COMMUNITY AND COUNTY CODES.
10. IN LIEU OF TREATING THE SOIL, AN ALTERNATIVE TO TERMITE TREATED SOIL CAN BE TERMICIDE.
11. BORA-CARE TO BE APPLIED ON INTERIOR WALLS IAW MANUFACTURER'S INSTRUCTIONS AND SPECIFICATIONS, PURSUANT TO CH.482 FLORDA BUILDING CODE.

THIS STRUCTURE IS DESIGNED TO WITHSTAND 150 MPH WINDS PER THE 7th EDITION, 2020 OF THE FLORIDA BUILDING CODE RESIDENTIAL AND IS CERTIFIED AS SUCH

LOT SPECIFIC INFORMATION

© COPYRIGHT 2012 Park Square Homes hereby reserves its common law copyrights and other copyrights in these plans, ideas, and design. These plans, ideas and designs are not to be copied or changed in any manner or form whatsoever, nor are they to be assigned to any third party without first obtaining the express written permission from Park Square Homes.

REVISIONS	BY
05-29-20	RDC

Engineering By:
DBE and C
MICHAEL A. THOMPSON
PE 47509
PHONE 407-721-2292

A DIVISION OF PARK SQUARE ENTERPRISES, INC.
5200 Vineland Road, Suite 200
Orlando, Florida 32811
Phone: (407) 529 - 3000

Park Square HOMES

SIGNATURE SERIES

FOUNDATION PLAN

5803T-SIDE LOAD

THE CARRARA II

DATE	09-01-14
SCALE	AS NOTED
DRAWN	RDC
JOB	N/A
SHEET	01C.1
OF	SHEETS

FOUNDATION NOTES

1. CONTRACTOR VERIFY ALL DIMENSIONS ON JOB SITE.
2. ⊡ DENOTES FILL CELL REINF. W/ CONC. W/ (1) #5φ REBAR. GRADE 60
3. ■ DENOTES FILL CELL REINF. W/ CONC. W/ (2) #5φ REBAR. GRADE 60
4. DO NOT SCALE PRINTS! CONSTRUCTION TO BE FROM CALCULATED DIMENSIONS ONLY. ANY DISCREPANCIES OR ERRORS TO BE REPORTED PROMPTLY TO SUPERVISOR FOR CLARIFICATION.
5. WATER HEATER T & P RELIEF VALVE SHALL BE FULL SIZE TO EXTERIOR. WATER HEATER AT OR ABOVE FLOOR LEVEL SHALL BE IN A PAN WITH DRAIN TO EXTERIOR. WATER HEATER SHALL HAVE APPROVED THERMAL EXPANSION DEVICE.
6. ▩ DENOTES FLOOR SLAB OF PLANT MIX CONCRETE 2500 P.S.I. 4" THICK WITH 6X6 10/10 GAUGE REINFORCING MAT. WITH MIN. 1" COVER. TERMITE TREATED SOIL WITH .006mm (6 mil) POLYETHYLENE VAPOR BARRIER OVER COMPACTED CLEAN FILL. WWF SHALL BE PLACED IN MIDDLE TO UPPER THIRD OF SLAB AND SUPPORTED ON APPROVED SLAB BOLSTERS. *FIBER MESH REINFORCEMENT MAY BE USED AS ALTERNATIVE TO WIRE MESH.
7. PAVERS MAY BE USED ILO CONCRETE SLABS IN PATIO, PORCH, DRIVE AND WALKWAY AREAS. DELETE SLAB IN AREAS PAVERS ARE USED.
8. ~~(16/D2) STANDARD FOOTING~~ ~~(1/D2) ALTERNATE FOOTING~~ NOTE #8 NOT USED
9. MECHANICAL EQUIP. LOCATIONS WILL BE DETERMINED BY COMMUNITY AND COUNTY CODES.
10. IN LIEU OF TREATING THE SOIL, AN ALTERNATIVE TO TERMITE TREATED SOIL CAN BE TERMICIDE.
11. BORA-CARE TO BE APPLIED ON INTERIOR WALLS IAW MANUFACTURER'S INSTRUCTIONS AND SPECIFICATIONS, PURSUANT TO CH.482 FLORDA BUILDING CODE.

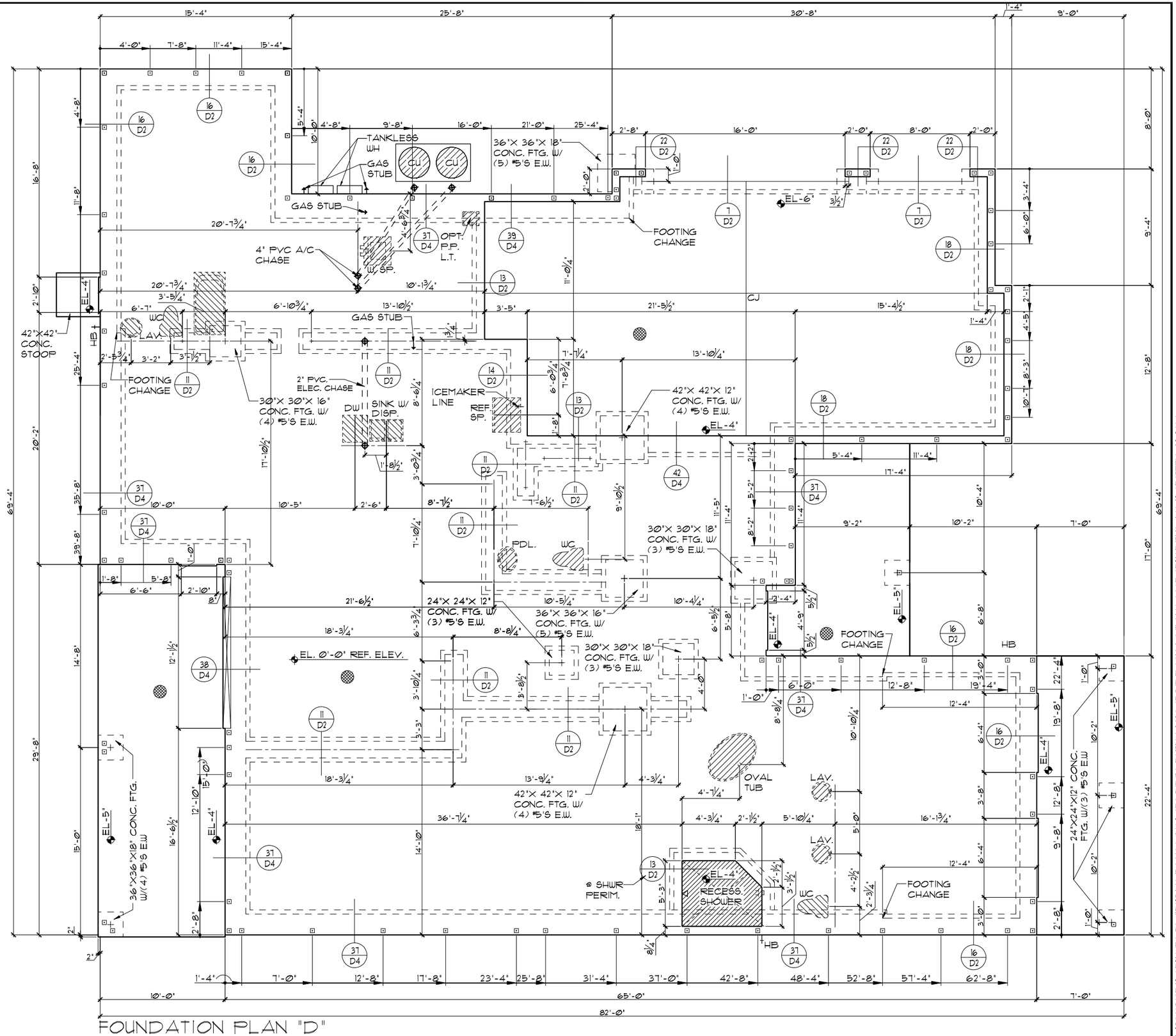

FOUNDATION PLAN "D"

1/8"=1'-0" (11X17) 1/4"=1'-0" (22X34)

THIS STRUCTURE IS DESIGNED TO WITHSTAND 150 MPH WINDS PER THE 7th EDITION, 2020 OF THE FLORIDA BUILDING CODE RESIDENTIAL AND IS CERTIFIED AS SUCH

LOT SPECIFIC INFORMATION

© COPYRIGHT 2012
Park Square Homes hereby reserves its common law copyrights and other copyrights in these plans, ideas, and design. These plans, ideas and designs are not to be copied or changed in any manner or form whatsoever, nor are they to be assigned to any third party without first obtaining the express written permission from Park Square Homes.

SIGNATURE SERIES

REVISIONS	BY
05-29-20	RDC

Engineering By:
DBE and C
MICHAEL A. THOMPSON
PE 47509
PHONE 407-721-2292

A DIVISION OF PARK SQUARE ENTERPRISES, INC.
5200 Vineland Road, Suite 200
Orlando, Florida 32811
Phone: (407) 529 - 3000

Park Square HOMES

FOUNDATION PLAN

5803T-SIDE LOAD

THE CARRARA II

DATE	09-01-14
SCALE	AS NOTED
DRAWN	RDC
JOB	N/A
SHEET	01D.1
OF	SHEETS

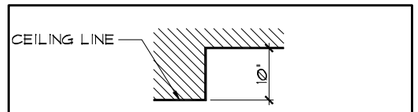

1/02 CEILING DETAILS
1/2"=1'-0" (11X17) 1"=1'-0" (22X34)

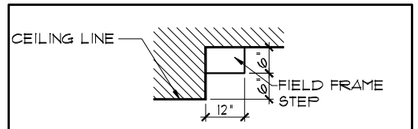

2/02 CEILING DETAILS
1/4"=1'-0" (11X17) 1/2"=1'-0" (22X34)

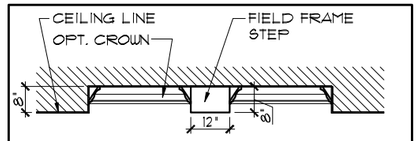

3/02 CEILING DETAILS
1/4"=1'-0" (11X17) 1/2"=1'-0" (22X34)

TABULATION	
UPPER LIVING	2,688 SF.
LOWER LIVING	3,115 SF.
TOTAL LIVING	5,803 SF.
GARAGE	861 SF.
ENTRY	48 SF.
LANAI	297 SF.
PORCH	156 SF.
BALCONY	179 SF.
TOTAL UNDER ROOF	7,344 SF.

GENERAL NOTES

1. CONTRACTOR TO VERIFY ALL DIMENSIONS ON JOB SITE.
2. DO NOT SCALE PRINTS! CONSTRUCTION TO BE FROM CALCULATED DIMENSIONS ONLY. ANY DISCREPANCIES OR ERRORS TO BE REPORTED PROMPTLY TO SUPERVISOR FOR CLARIFICATION.
3. ALL INTERIOR FRAME WALL DIMENSIONS TO BE 3½" UNLESS NOTED OTHERWISE.
4. ALL EXTERIOR BLOCK WALL DIMENSIONS TO BE 7½" UNLESS NOTED OTHERWISE.
5. PULL ALL DIMENSIONS FROM THE REAR OF PLAN.

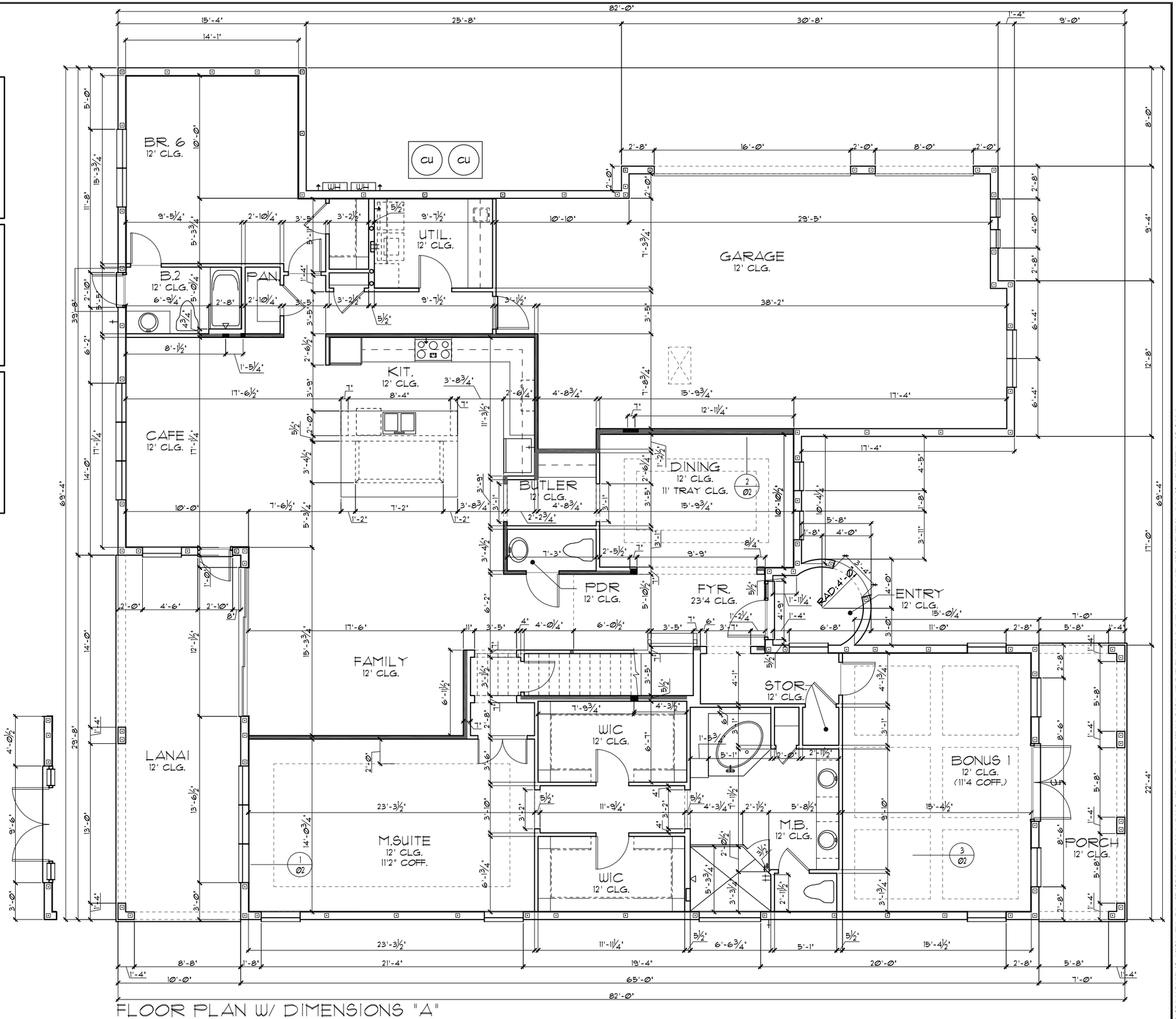

FLOOR PLAN W/ DIMENSIONS "A"
1/8"=1'-0" (11X17) 1/4"=1'-0" (22X34)

THIS STRUCTURE IS DESIGNED TO WITHSTAND 150 MPH WINDS PER THE 7th EDITION, 2020 OF THE FLORIDA BUILDING CODE RESIDENTIAL AND IS CERTIFIED AS SUCH

LOT SPECIFIC INFORMATION

© COPYRIGHT 2012 Park Square Homes hereby reserves its common law copyrights and other copyrights in these plans, ideas, and design. These plans, ideas and designs are not to be copied or changed in any manner or form whatsoever, nor are they to be assigned to any third party without first obtaining the express written permission from Park Square Homes.

SIGNATURE SERIES

REVISIONS	BY
05-29-20	RDC

Engineering By:
DBE and C
MICHAEL A. THOMPSON
PE 47509
PHONE 407-721-2292

A DIVISION OF PARK SQUARE ENTERPRISES, INC.
5200 Vineland Road, Suite 200
Orlando, Florida 32811
Phone: (407) 529 - 3000

Park Square HOMES

FLOOR PLAN W/ DIMENSIONS

5803T-SIDE LOAD

THE CARRARA II

DATE	09-01-14
SCALE	AS NOTED
DRAWN	RDC
JOB	N/A
SHEET	02A.1
OF	SHEETS

1/02 CEILING DETAILS
1/2"=1'-0" (11X17) 1"=1'-0" (22X34)

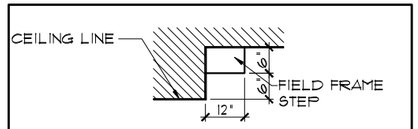

2/02 CEILING DETAILS
1/4"=1'-0" (11X17) 1/2"=1'-0" (22X34)

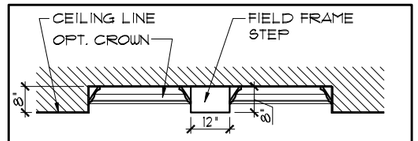

3/02 CEILING DETAILS
1/4"=1'-0" (11X17) 1/2"=1'-0" (22X34)

TABULATION	
UPPER LIVING	2,688 SF.
LOWER LIVING	3,115 SF.
TOTAL LIVING	5,803 SF.
GARAGE	861 SF.
ENTRY	48 SF.
LANAI	297 SF.
PORCH	156 SF.
BALCONY	179 SF.
TOTAL UNDER ROOF	7,344 SF.

GENERAL NOTES

1. CONTRACTOR TO VERIFY ALL DIMENSIONS ON JOB SITE.
2. DO NOT SCALE PRINTS! CONSTRUCTION TO BE FROM CALCULATED DIMENSIONS ONLY. ANY DISCREPANCIES OR ERRORS TO BE REPORTED PROMPTLY TO SUPERVISOR FOR CLARIFICATION.
3. ALL INTERIOR FRAME WALL DIMENSIONS TO BE 3½" UNLESS NOTED OTHERWISE.
4. ALL EXTERIOR BLOCK WALL DIMENSIONS TO BE 7½" UNLESS NOTED OTHERWISE.
5. PULL ALL DIMENSIONS FROM THE REAR OF PLAN.

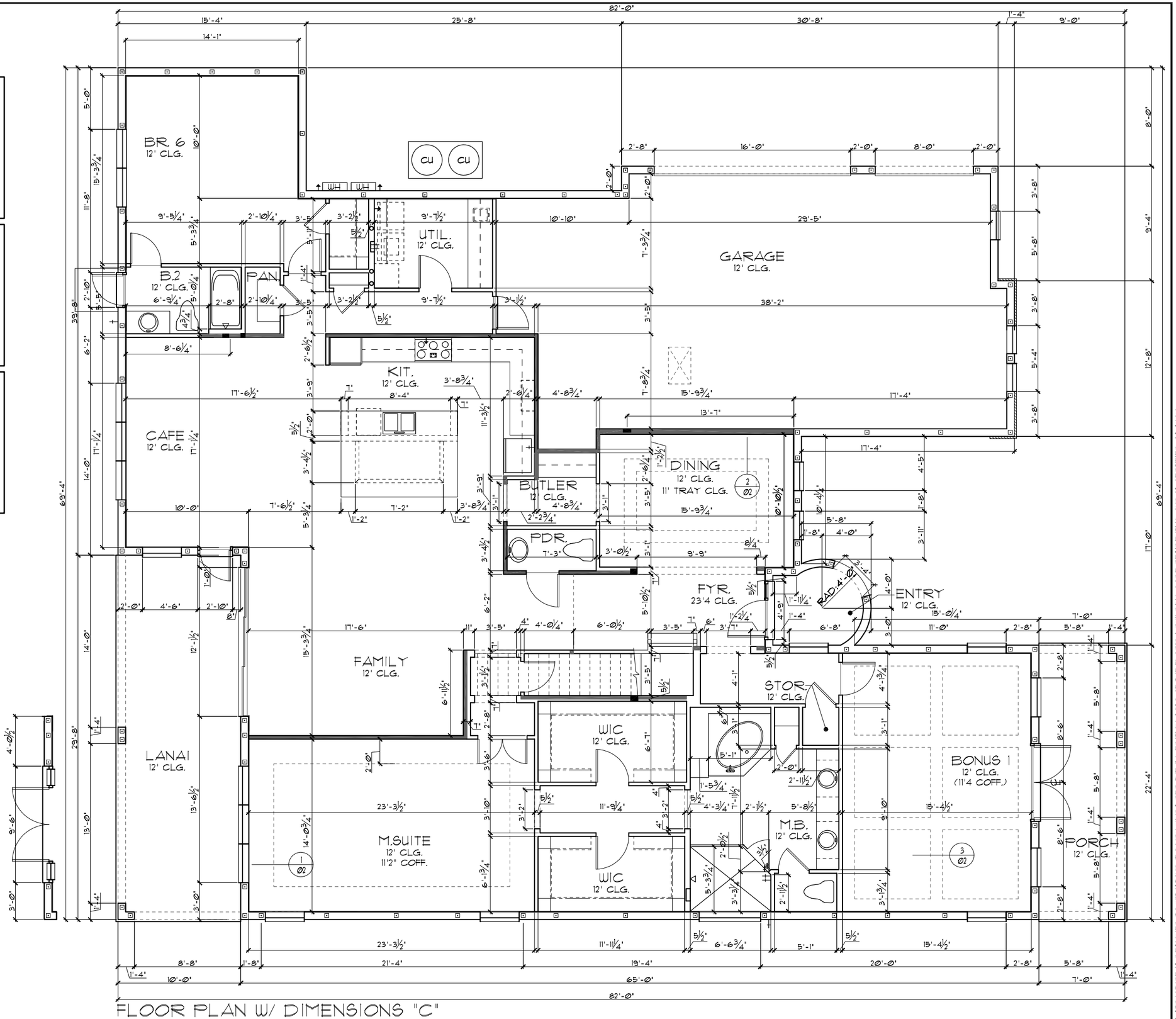

FLOOR PLAN W/ DIMENSIONS "C"
1/8"=1'-0" (11X17) 1/4"=1'-0" (22X34)

THIS STRUCTURE IS DESIGNED TO WITHSTAND 150 MPH WINDS PER THE 7th EDITION, 2020 OF THE FLORIDA BUILDING CODE RESIDENTIAL AND IS CERTIFIED AS SUCH

LOT SPECIFIC INFORMATION

© COPYRIGHT 2012 Park Square Homes hereby reserves its common law copyrights and other copyrights in these plans, ideas, and design. These plans, ideas and designs are not to be copied or changed in any manner or form whatsoever, nor are they to be assigned to any third party without first obtaining the express written permission from Park Square Homes.

SIGNATURE SERIES

REVISIONS	BY
05-29-20	RDC

Engineering By:
DBE and C
MICHAEL A. THOMPSON
PE 47509
PHONE 407-721-2292

A DIVISION OF PARK SQUARE ENTERPRISES, INC.
5200 Vineland Road, Suite 200
Orlando, Florida 32811
Phone: (407) 529 - 3000

Park Square HOMES

FLOOR PLAN W/ DIMENSIONS

5803T-SIDE LOAD

THE CARRARA II

DATE	09-01-14
SCALE	AS NOTED
DRAWN	RDC
JOB	N/A
SHEET	02C.1
OF	SHEETS

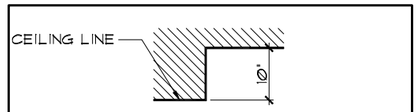

1 / 02 CEILING DETAILS
1/2"=1'-0" (11X17) 1"=1'-0" (22X34)

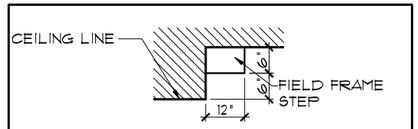

2 / 02 CEILING DETAILS
1/4"=1'-0" (11X17) 1/2"=1'-0" (22X34)

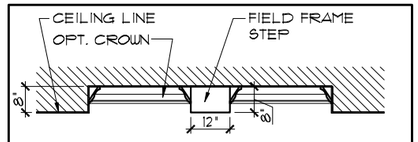

3 / 02 CEILING DETAILS
1/4"=1'-0" (11X17) 1/2"=1'-0" (22X34)

TABULATION	
UPPER LIVING	2,688 SF.
LOWER LIVING	3,115 SF.
TOTAL LIVING	5,803 SF.
GARAGE	861 SF.
ENTRY	144 SF.
LANAI	297 SF.
PORCH	156 SF.
BALCONY	179 SF.
TOTAL UNDER ROOF	7,440 SF.

GENERAL NOTES

1. CONTRACTOR TO VERIFY ALL DIMENSIONS ON JOB SITE.
2. DO NOT SCALE PRINTS! CONSTRUCTION TO BE FROM CALCULATED DIMENSIONS ONLY. ANY DISCREPANCIES OR ERRORS TO BE REPORTED PROMPTLY TO SUPERVISOR FOR CLARIFICATION.
3. ALL INTERIOR FRAME WALL DIMENSIONS TO BE 3½" UNLESS NOTED OTHERWISE.
4. ALL EXTERIOR BLOCK WALL DIMENSIONS TO BE 7½" UNLESS NOTED OTHERWISE.
5. PULL ALL DIMENSIONS FROM THE REAR OF PLAN.

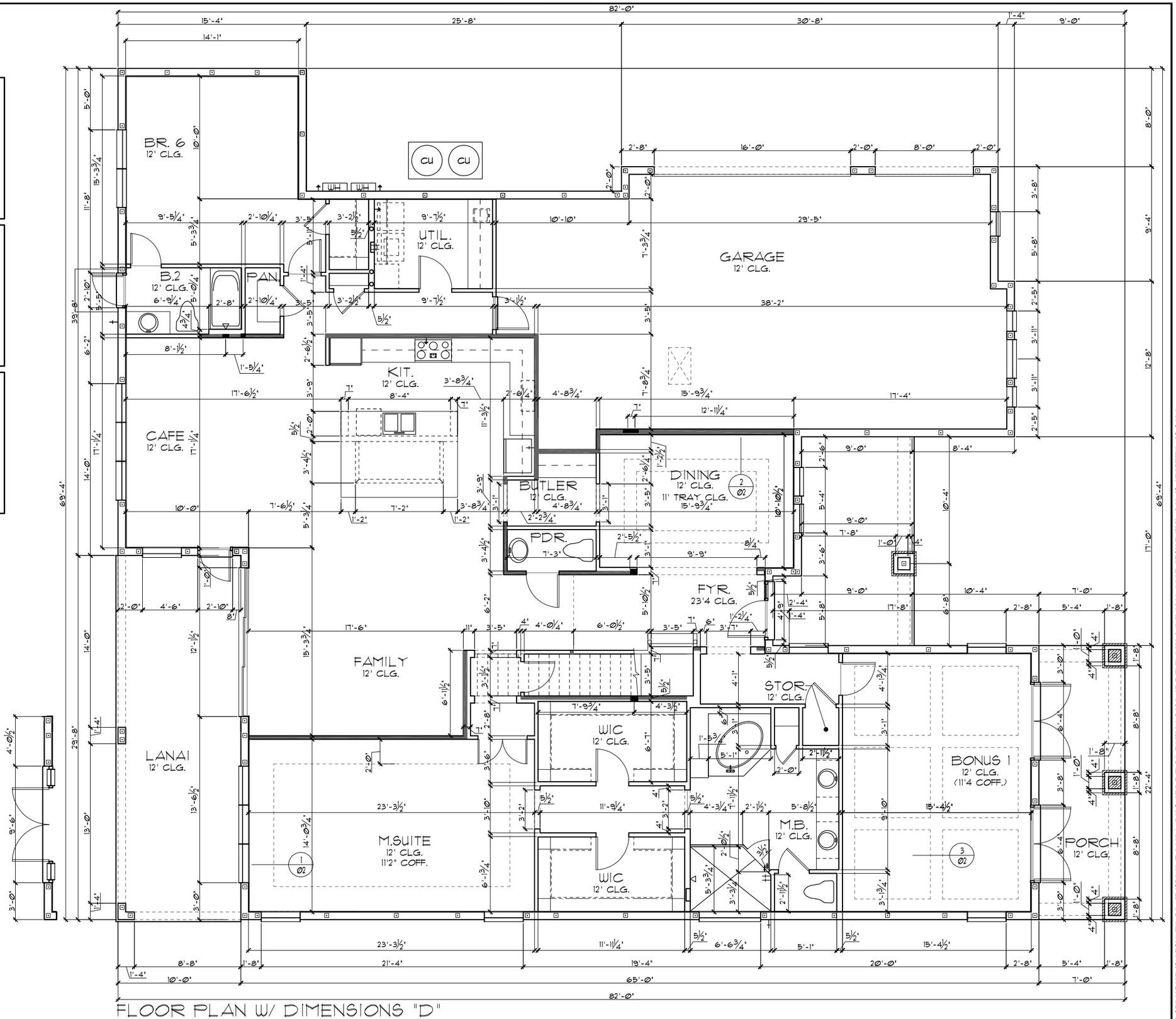

FLOOR PLAN W/ DIMENSIONS "D"
1/8"=1'-0" (11X17) 1/4"=1'-0" (22X34)

THIS STRUCTURE IS DESIGNED TO WITHSTAND 150 MPH WINDS PER THE 7th EDITION, 2020 OF THE FLORIDA BUILDING CODE RESIDENTIAL AND IS CERTIFIED AS SUCH

LOT SPECIFIC INFORMATION

SIGNATURE SERIES

© COPYRIGHT 2012 Park Square Homes hereby reserves its common law copyrights and other copyrights in these plans, ideas, and design. These plans, ideas and designs are not to be copied or changed in any manner or form whatsoever, nor are they to be assigned to any third party without first obtaining the express written permission from Park Square Homes.

REVISIONS	BY
05-29-20	RDC

Engineering By:
DBE and C
MICHAEL A. THOMPSON
PE 47509
PHONE 407-721-2292

A DIVISION OF PARK SQUARE ENTERPRISES, INC.
5200 Vineland Road, Suite 200
Orlando, Florida 32811
Phone: (407) 529 - 3000

Park Square HOMES

FLOOR PLAN W/ DIMENSIONS

5803T-SIDE LOAD

THE CARRARA II

DATE	09-01-14
SCALE	AS NOTED
DRAWN	RDC
JOB	N/A
SHEET	02D.1
OF	SHEETS

LOAD INFORMATION

PER 7TH EDITION, 2020 FLORIDA BUILDING RESIDENTAIL CODE

DEAD LOADS

FLOOR:	STRUCTURE	7 PSF
	CEILINGS	3 PSF
	MECH/ELEC	5 PSF
	PARTITIONS	5 PSF
	TOTAL	20 PSF
ROOF:	SHEATHING	5 PSF
	STRUCTURE	7 PSF
	CEILINGS	3 PSF
	MECH/ELEC	5 PSF
	TOTAL	20 PSF

FLOOR LIVE LOADS

RESIDENTIAL FLOOR:	40 PSF
UNINHABITABLE ATTIC WITHOUT STORAGE:	10 PSF
UNINHABITABLE ATTIC W/LIMITED STORAGE:	20 PSF
ROOMS OTHER THAN SLEEPING ROOM:	40 PSF
SLEEPING ROOM:	30 PSF
STAIR LIVE LOAD:	40 PSF

ROOF LIVE LOADS

MINIMUM ROOF LIVE LOAD (PSF)
TRIBUTARY LOADED AREA (SQ. FT.)
FOR ANY STRUCTURAL MEMBER

ROOF SLOPE	0-200	201-600	OVER 600
0:12 < 4:12	20	16	12
≥ 4:12 < 12:12	16	14	12
≥ 12:12	12	12	12

WIND INFORMATION

PER 7TH EDITION, 2020 FLORIDA BUILDING RESIDENTAIL CODE

1. BASIC WIND SPEED: 150 MPH
2. WIND IMPORTANCE FACTOR: N/A
3. BUILDING CATEGORY: C
4. INTERNAL PRESSURE +/-.18, INCLUDED COEFFICIENT: IN NOTE #5
5. COMPONENT / CLADDING SEE PLAN DESIGN WIND PRESSURE:

+	XXX	DESIGN WIND PRESSURE IAW FLA
-	XXX	RESIDENTIAL CODE, SECTION R301

NOTE: DESIGN PRESSURES BASED ON BASIC WIND SPEED AND NOT ULTIMATE WIND SPEED.

GENERAL NOTES

1. PROVIDE RECESS HOT & COLD WATER WITH DRAIN @ WASHER SPACE.
2. VENT DRYER THRU ROOF.
3. PROVIDE COLD WATER LINE FOR ICE MAKER LINE @ REF. SPACE.
4. DO NOT SCALE PRINTS! CONSTRUCTION TO BE FROM CALCULATED DIMENSIONS ONLY. ANY DISCREPANCIES OR ERRORS TO BE REPORTED PROMPTLY TO SUPERVISOR FOR CLARIFICATION.
5. MECHANICAL EQUIPMENT LOCATION TO BE DETERMINED BY COMMUNITY STANDARDS AND APPLICABLE COUNTY CODES.
6. DENOTES CONC. BLOCK WALL HGT. @ 12'-0" A.F.F.
   DENOTES CONC. BLOCK WALL HGT. @ N/A
7. REFER TO TYPICAL DETAIL SHEET FOR EXTERIOR WALL FINISH SPECIFICATIONS
8. REFER TO DETAIL SHEETS FOR FLASHING REQUIREMENTS AT ALL WOOD TO MASONRY INTERFACES
9. ANCHOR THE CONDENSER UNIT TO SLAB PER CODE: M 307.3 + 1307.3.1
10. ALL INTER. FIRST FLOOR CEILINGS AT 12'-0" UNLESS NOTED OTHERWISE.
    ALL INTER. SECOND FLOOR CEILINGS AT 10'-0" UNLESS NOTED OTHERWISE.

NOTE: DOOR FROM HOUSE TO GARAGE MUST BE SOLID WOOD DOORS NO LESS 1 3/8" IAW R302.5.1

NOTE: FIREBLOCKING AND DRAFTSTOPPING SHALL BE PROVIDED IN COMPLIANCE WITH FBC-2020 -R302.11 & R302.12

NOTE: TEMPERED GLAZING IS REQUIRED AT ALL HAZARDOUS LOCATIONS AS DEFINED IN FBC R308.4

EGRESS WINDOW SCHEDULE

SH25	33 1/2" H. X 30" W.	MIN. NET CLEAR OPENING 5.7 SQFT

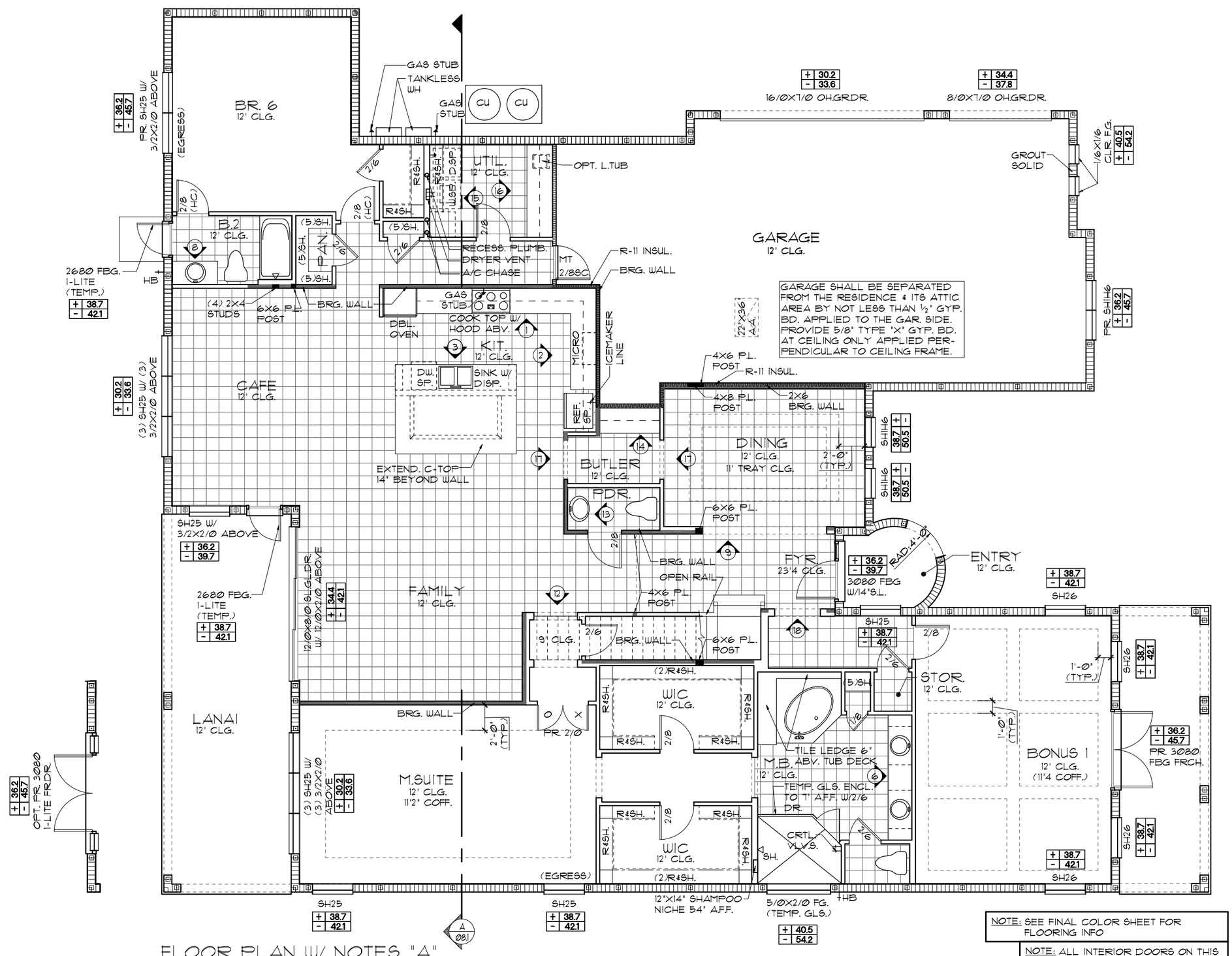

FLOOR PLAN W/ NOTES "A"

1/8"=1'-0" (11X17) 1/4"=1'-0" (22X34)

NOTE: SEE FINAL COLOR SHEET FOR FLOORING INFO

NOTE: ALL INTERIOR DOORS ON THIS FLOOR TO BE: 8'-0" U.N.O.

SIGNATURE SERIES

REVISIONS	BY
05-29-20	RDC

Engineering By:
DBE and C
MICHAEL A. THOMPSON
PE 47509
PHONE 407-721-2292

A DIVISION OF PARK SQUARE ENTERPRISES, INC.
5200 Vineland Road, Suite 200
Orlando, Florida 32811
Phone: (407) 529 - 3000

Park Square HOMES

LOT SPECIFIC INFORMATION

FLOOR PLAN W/ NOTES

5803T-SIDE LOAD

THE CARRARA II

DATE	09-01-14
SCALE	AS NOTED
DRAWN	RDC
JOB	N/A
SHEET	03A.1
OF	SHEETS

THIS STRUCTURE IS DESIGNED TO WITHSTAND 150 MPH WINDS PER THE 7th EDITION, 2020 OF THE FLORIDA BUILDING CODE RESIDENTIAL AND IS CERTIFIED AS SUCH

© COPYRIGHT 2012 Park Square Homes hereby reserves its common law copyrights and other copyrights in these plans, ideas, and design. These plans, ideas and designs are not to be copied or changed in any manner or form whatsoever, nor are they to be assigned to any third party without first obtaining the express written permission from Park Square Homes.

LOAD INFORMATION

PER 7TH EDITION, 2020 FLORIDA BUILDING RESIDENTAIL CODE

DEAD LOADS

FLOOR:	STRUCTURE	7 PSF
	CEILINGS	3 PSF
	MECH/ELEC	5 PSF
	PARTITIONS	5 PSF
	TOTAL	20 PSF
ROOF:	SHEATHING	5 PSF
	STRUCTURE	7 PSF
	CEILINGS	3 PSF
	MECH/ELEC	5 PSF
	TOTAL	20 PSF

FLOOR LIVE LOADS

RESIDENTIAL FLOOR:	40 PSF
UNINHABITABLE ATTIC WITHOUT STORAGE:	10 PSF
UNINHABITABLE ATTIC W/LIMITED STORAGE:	20 PSF
ROOMS OTHER THAN SLEEPING ROOM:	40 PSF
SLEEPING ROOM:	30 PSF
STAIR LIVE LOAD:	40 PSF

ROOF LIVE LOADS

MINIMUM ROOF LIVE LOAD (PSF)
TRIBUTARY LOADED AREA (SQ. FT.)
FOR ANY STRUCTURAL MEMBER

ROOF SLOPE	0-200	201-600	OVER 600
0:12 < 4:12	20	16	12
≥ 4:12 < 12:12	16	14	12
≥ 12:12	12	12	12

WIND INFORMATION

PER 7TH EDITION, 2020 FLORIDA BUILDING RESIDENTAIL CODE

1. BASIC WIND SPEED: ---------- 150 MPH
2. WIND IMPORTANCE FACTOR: ---------- N/A
3. BUILDING CATEGORY: ---------- C
4. INTERNAL PRESSURE ---- +/-.18, INCLUDED COEFFICIENT: IN NOTE #5
5. COMPONENT / CLADDING ----- SEE PLAN DESIGN WIND PRESSURE:

+	XXX	DESIGN WIND PRESSURE IAW FLA
-	XXX	RESIDENTIAL CODE, SECTION R301

NOTE: DESIGN PRESSURES BASED ON BASIC WIND SPEED AND NOT ULTIMATE WIND SPEED.

GENERAL NOTES

1. PROVIDE RECESS HOT & COLD WATER WITH DRAIN @ WASHER SPACE.
2. VENT DRYER THRU ROOF.
3. PROVIDE COLD WATER LINE FOR ICE MAKER LINE @ REF. SPACE.
4. DO NOT SCALE PRINTS! CONSTRUCTION TO BE FROM CALCULATED DIMENSIONS ONLY. ANY DISCREPANCIES OR ERRORS TO BE REPORTED PROMPTLY TO SUPERVISOR FOR CLARIFICATION.
5. MECHANICAL EQUIPMENT LOCATION TO BE DETERMINED BY COMMUNITY STANDARDS AND APPLICABLE COUNTY CODES.
6. DENOTES CONC. BLOCK WALL HGT. @ 12'-0" A.F.F.
   DENOTES CONC. BLOCK WALL HGT. @ N/A
7. REFER TO TYPICAL DETAIL SHEET FOR EXTERIOR WALL FINISH SPECIFICATIONS
8. REFER TO DETAIL SHEETS FOR FLASHING REQUIREMENTS AT ALL WOOD TO MASONRY INTERFACES
9. ANCHOR THE CONDENSER UNIT TO SLAB PER CODE: M 307.3 + 1307.3.1
10. ALL INTER. FIRST FLOOR CEILINGS AT 12'-0" UNLESS NOTED OTHERWISE.
    ALL INTER. SECOND FLOOR CEILINGS AT 10'-0" UNLESS NOTED OTHERWISE.

NOTE: DOOR FROM HOUSE TO GARAGE MUST BE SOLID WOOD DOORS NO LESS 1 3/8" IAW R302.5.1

NOTE: FIREBLOCKING AND DRAFTSTOPPING SHALL BE PROVIDED IN COMPLIANCE WITH FBC-2020 -R302.11 & R302.12

NOTE: TEMPERED GLAZING IS REQUIRED AT ALL HAZARDOUS LOCATIONS AS DEFINED IN FBC R308.4

EGRESS WINDOW SCHEDULE

SH25	33 1/2" H. X 30" W.	MIN. NET CLEAR OPENING 5.7 SQFT

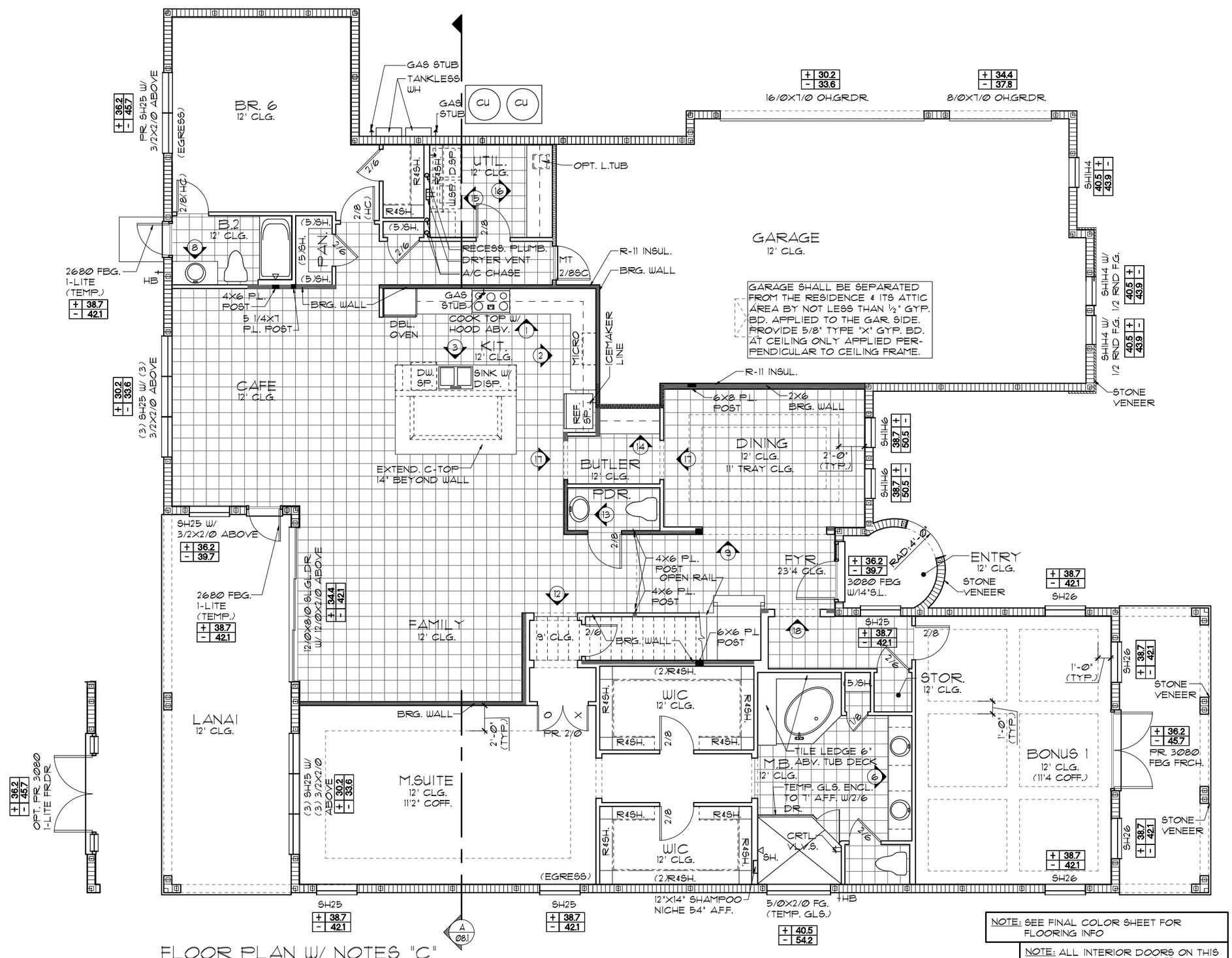

FLOOR PLAN W/ NOTES "C"

1/8"=1'-0" (11X17) 1/4"=1'-0" (22X34)

NOTE: SEE FINAL COLOR SHEET FOR FLOORING INFO

NOTE: ALL INTERIOR DOORS ON THIS FLOOR TO BE: 8'-0" U.N.O.

THIS STRUCTURE IS DESIGNED TO WITHSTAND 150 MPH WINDS PER THE 7th EDITION, 2020 OF THE FLORIDA BUILDING CODE RESIDENTIAL AND IS CERTIFIED AS SUCH

LOT SPECIFIC INFORMATION

© COPYRIGHT 2012
Park Square Homes hereby reserves its common law copyrights and other copyrights in these plans, ideas, and design. These plans, ideas and designs are not to be copied or changed in any manner or form whatsoever, nor are they to be assigned to any third party without first obtaining the express written permission from Park Square Homes.

SIGNATURE SERIES

REVISIONS	BY
05-29-20	RDC

Engineering By:
DBE and C
MICHAEL A. THOMPSON
PE 47509
PHONE 407-721-2292

A DIVISION OF PARK SQUARE ENTERPRISES, INC.
5200 Vineland Road, Suite 200
Orlando, Florida 32811
Phone: (407) 529 - 3000

Park Square HOMES

FLOOR PLAN W/ NOTES

5803T-SIDE LOAD

THE CARRARA II

DATE	09-01-14
SCALE	AS NOTED
DRAWN	RDC
JOB	N/A
SHEET	03C.1
OF	SHEETS

LOAD INFORMATION

PER 7TH EDITION, 2020 FLORIDA BUILDING RESIDENTAIL CODE

DEAD LOADS

FLOOR:	STRUCTURE	7 PSF
	CEILINGS	3 PSF
	MECH/ELEC	5 PSF
	PARTITIONS	5 PSF
	TOTAL	20 PSF
ROOF:	SHEATHING	5 PSF
	STRUCTURE	7 PSF
	CEILINGS	3 PSF
	MECH/ELEC	5 PSF
	TOTAL	20 PSF

FLOOR LIVE LOADS

RESIDENTIAL FLOOR:	40 PSF
UNINHABITABLE ATTIC WITHOUT STORAGE:	10 PSF
UNINHABITABLE ATTIC W/LIMITED STORAGE:	20 PSF
ROOMS OTHER THAN SLEEPING ROOM:	40 PSF
SLEEPING ROOM:	30 PSF
STAIR LIVE LOAD:	40 PSF

ROOF LIVE LOADS

MINIMUM ROOF LIVE LOAD (PSF)
TRIBUTARY LOADED AREA (SQ. FT.)
FOR ANY STRUCTURAL MEMBER

ROOF SLOPE	0-200	201-600	OVER 600
0:12 < 4:12	20	16	12
≥ 4:12 < 12:12	16	14	12
≥ 12:12	12	12	12

WIND INFORMATION

PER 7TH EDITION, 2020 FLORIDA BUILDING RESIDENTAIL CODE

1. BASIC WIND SPEED: 150 MPH
2. WIND IMPORTANCE FACTOR: N/A
3. BUILDING CATEGORY: C
4. INTERNAL PRESSURE +/-.18, INCLUDED COEFFICIENT: IN NOTE #5
5. COMPONENT / CLADDING SEE PLAN DESIGN WIND PRESSURE:

+	XXX	DESIGN WIND PRESSURE IAW FLA
-	XXX	RESIDENTIAL CODE, SECTION R301

NOTE: DESIGN PRESSURES BASED ON BASIC WIND SPEED AND NOT ULTIMATE WIND SPEED.

GENERAL NOTES

1. PROVIDE RECESS HOT & COLD WATER WITH DRAIN @ WASHER SPACE.
2. VENT DRYER THRU ROOF.
3. PROVIDE COLD WATER LINE FOR ICE MAKER LINE @ REF. SPACE.
4. DO NOT SCALE PRINTS! CONSTRUCTION TO BE FROM CALCULATED DIMENSIONS ONLY. ANY DISCREPANCIES OR ERRORS TO BE REPORTED PROMPTLY TO SUPERVISOR FOR CLARIFICATION.
5. MECHANICAL EQUIPMENT LOCATION TO BE DETERMINED BY COMMUNITY STANDARDS AND APPLICABLE COUNTY CODES.
6. DENOTES CONC. BLOCK WALL HGT. @ **12'-0" A.F.F.**
   DENOTES CONC. BLOCK WALL HGT. @ **N/A**
7. REFER TO TYPICAL DETAIL SHEET FOR EXTERIOR WALL FINISH SPECIFICATIONS
8. REFER TO DETAIL SHEETS FOR FLASHING REQUIREMENTS AT ALL WOOD TO MASONRY INTERFACES
9. ANCHOR THE CONDENSER UNIT TO SLAB PER CODE: M 307.3 + 1307.3.1
10. ALL INTER. FIRST FLOOR CEILINGS AT **12'-0"** UNLESS NOTED OTHERWISE.
    ALL INTER. SECOND FLOOR CEILINGS AT **10'-0"** UNLESS NOTED OTHERWISE.

NOTE: DOOR FROM HOUSE TO GARAGE MUST BE SOLID WOOD DOORS NO LESS 1 3/8" IAW R302.5.1

NOTE: FIREBLOCKING AND DRAFTSTOPPING SHALL BE PROVIDED IN COMPLIANCE WITH FBC-2020 -R302.11 & R302.12

NOTE: TEMPERED GLAZING IS REQUIRED AT ALL HAZARDOUS LOCATIONS AS DEFINED IN FBC R308.4

EGRESS WINDOW SCHEDULE

SH25	33 1/2" H. X 30" W.	MIN. NET CLEAR OPENING 5.7 SQFT

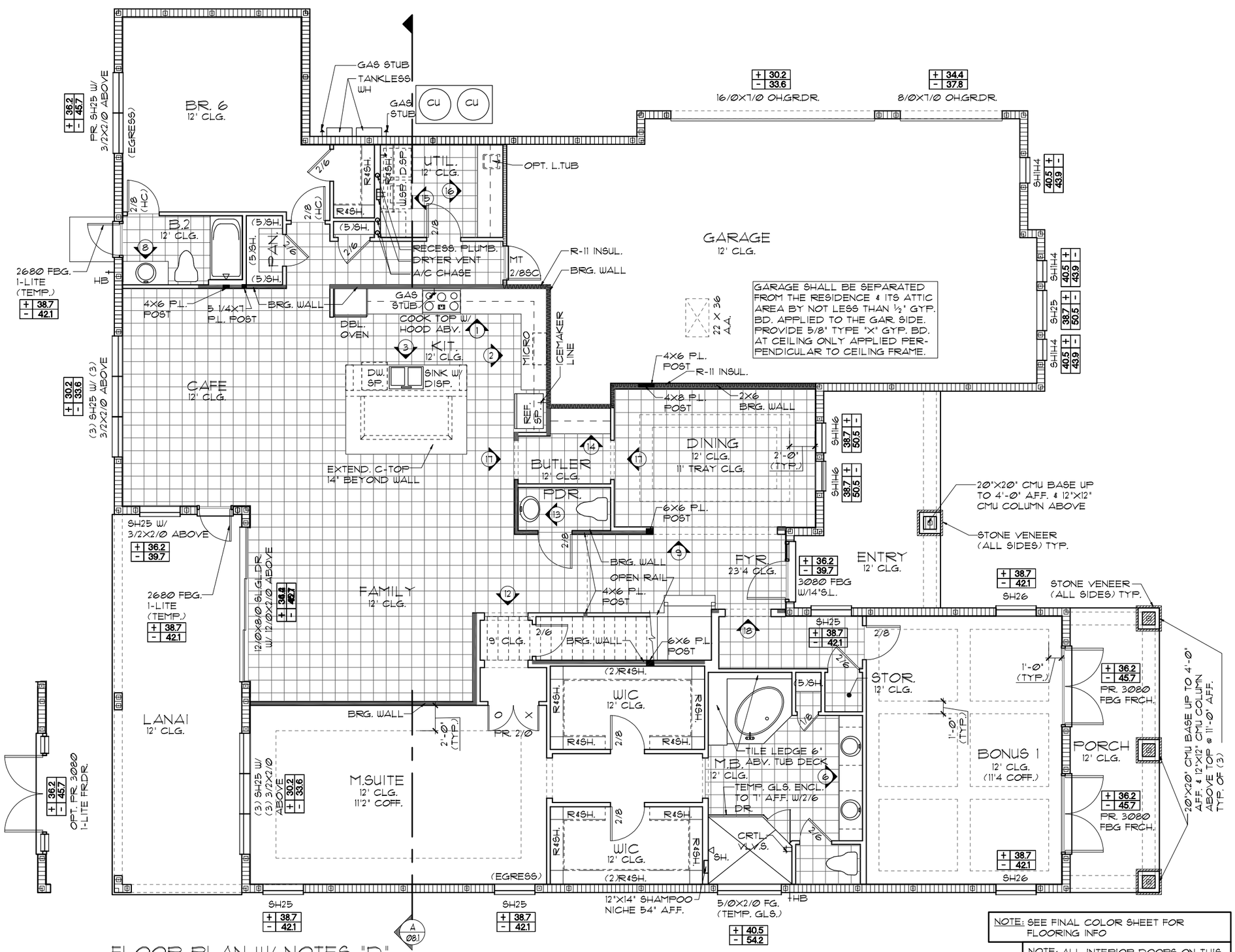

FLOOR PLAN W/ NOTES "D"

1/8"=1'-0" (11X17) 1/4"=1'-0" (22X34)

NOTE: SEE FINAL COLOR SHEET FOR FLOORING INFO

NOTE: ALL INTERIOR DOORS ON THIS FLOOR TO BE: **8'-0"** U.N.O.

THIS STRUCTURE IS DESIGNED TO WITHSTAND 150 MPH WINDS PER THE 7th EDITION, 2020 OF THE FLORIDA BUILDING CODE RESIDENTIAL AND IS CERTIFIED AS SUCH

LOT SPECIFIC INFORMATION

© COPYRIGHT 2012
Park Square Homes hereby reserves its common law copyrights and other copyrights in these plans, ideas, and design. These plans, ideas and designs are not to be copied or changed in any manner or form whatsoever, nor are they to be assigned to any third party without first obtaining the express written permission from Park Square Homes.

SIGNATURE SERIES

REVISIONS	BY
05-29-20	RDC

Engineering By:
DBE and C
MICHAEL A. THOMPSON
PE 47509
PHONE 407-721-2292

A DIVISION OF PARK SQUARE ENTERPRISES, INC.
5200 Vineland Road, Suite 200
Orlando, Florida 32811
Phone: (407) 529 - 3000

Park Square HOMES

FLOOR PLAN W/ NOTES

5803T-SIDE LOAD

THE CARRARA II

DATE	09-01-14
SCALE	AS NOTED
DRAWN	RDC
JOB	N/A
SHEET	03D.1
OF	SHEETS

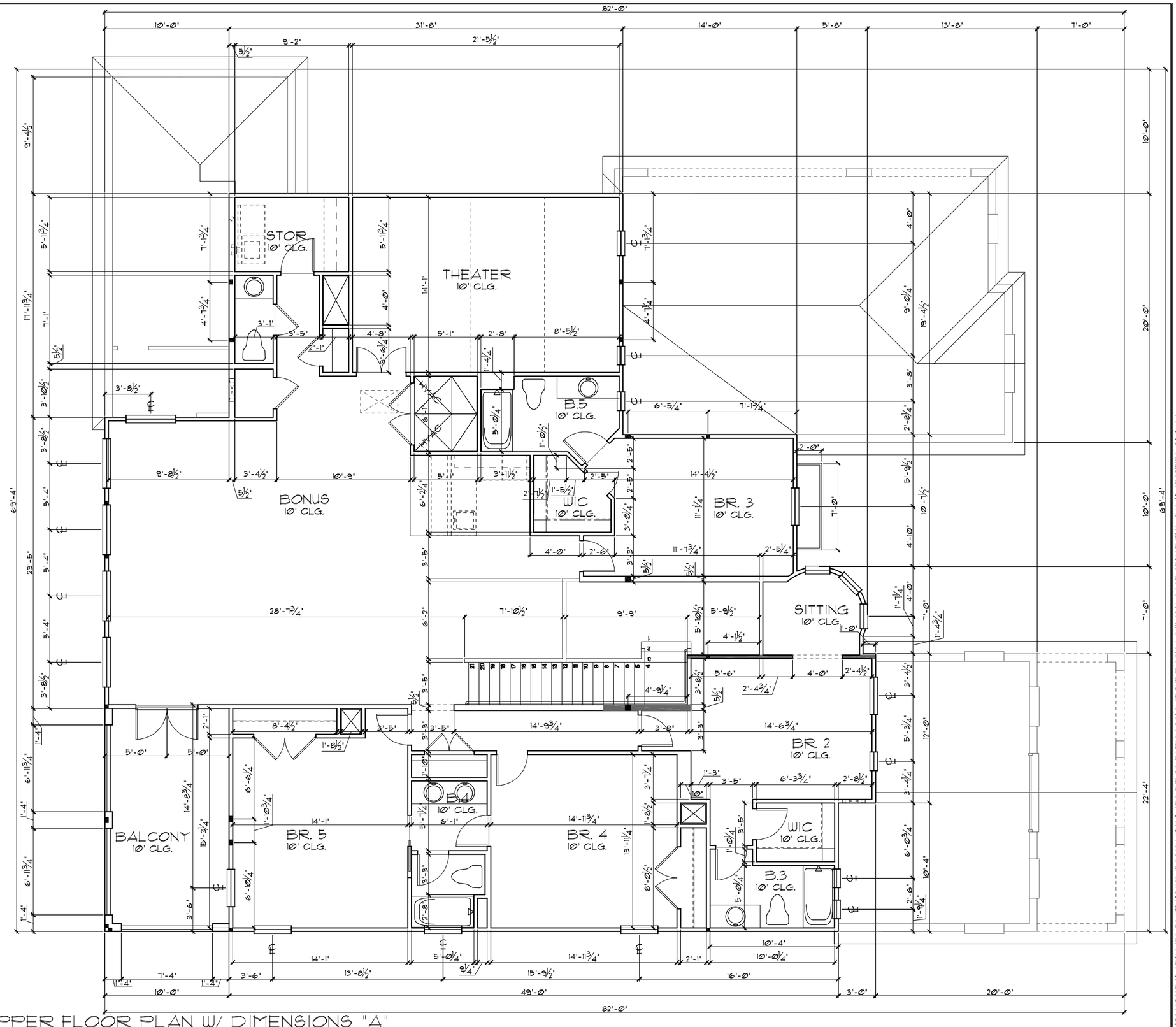

UPPER FLOOR PLAN W/ DIMENSIONS "A"

1/8"=1'-0" (11X17) 1/4"=1'-0" (22X34)

GENERAL NOTES

1. CONTRACTOR TO VERIFY ALL DIMENSIONS ON JOB SITE.
2. DO NOT SCALE PRINTS! CONSTRUCTION TO BE FROM CALCULATED DIMENSIONS ONLY. ANY DISCREPANCIES OR ERRORS TO BE REPORTED PROMPTLY TO SUPERVISOR FOR CLARIFICATION.
3. ALL INTERIOR FRAME WALL DIMENSIONS TO BE 3½" UNLESS NOTED OTHERWISE.
4. ALL EXTERIOR BLOCK WALL DIMENSIONS TO BE 7½" UNLESS NOTED OTHERWISE.
5. PULL ALL DIMENSIONS FROM THE REAR OF PLAN.

THIS STRUCTURE IS DESIGNED TO WITHSTAND 150 MPH WINDS PER THE 7th EDITION, 2020 OF THE FLORIDA BUILDING CODE RESIDENTIAL AND IS CERTIFIED AS SUCH

LOT SPECIFIC INFORMATION

SIGNATURE SERIES

© COPYRIGHT 2012
Park Square Homes hereby reserves its common law copyrights and other copyrights in these plans, ideas, and design. These plans, ideas and designs are not to be copied or changed in any manner or form whatsoever, nor are they to be assigned to any third party without first obtaining the express written permission from Park Square Homes.

REVISIONS	BY
05-29-20	RDC

Engineering By:
DBE and C
MICHAEL A. THOMPSON
PE 47509
PHONE 407-721-2292

A DIVISION OF PARK SQUARE ENTERPRISES, INC.
5200 Vineland Road, Suite 200
Orlando, Florida 32811
Phone: (407) 529 - 3000

Park Square HOMES

UPPER FLOOR PLAN W/ DIMENSIONS

5803T-SIDE LOAD

THE CARRARA II

DATE	09-01-14
SCALE	AS NOTED
DRAWN	RDC
JOB	N/A
SHEET	04A.1
OF	SHEETS

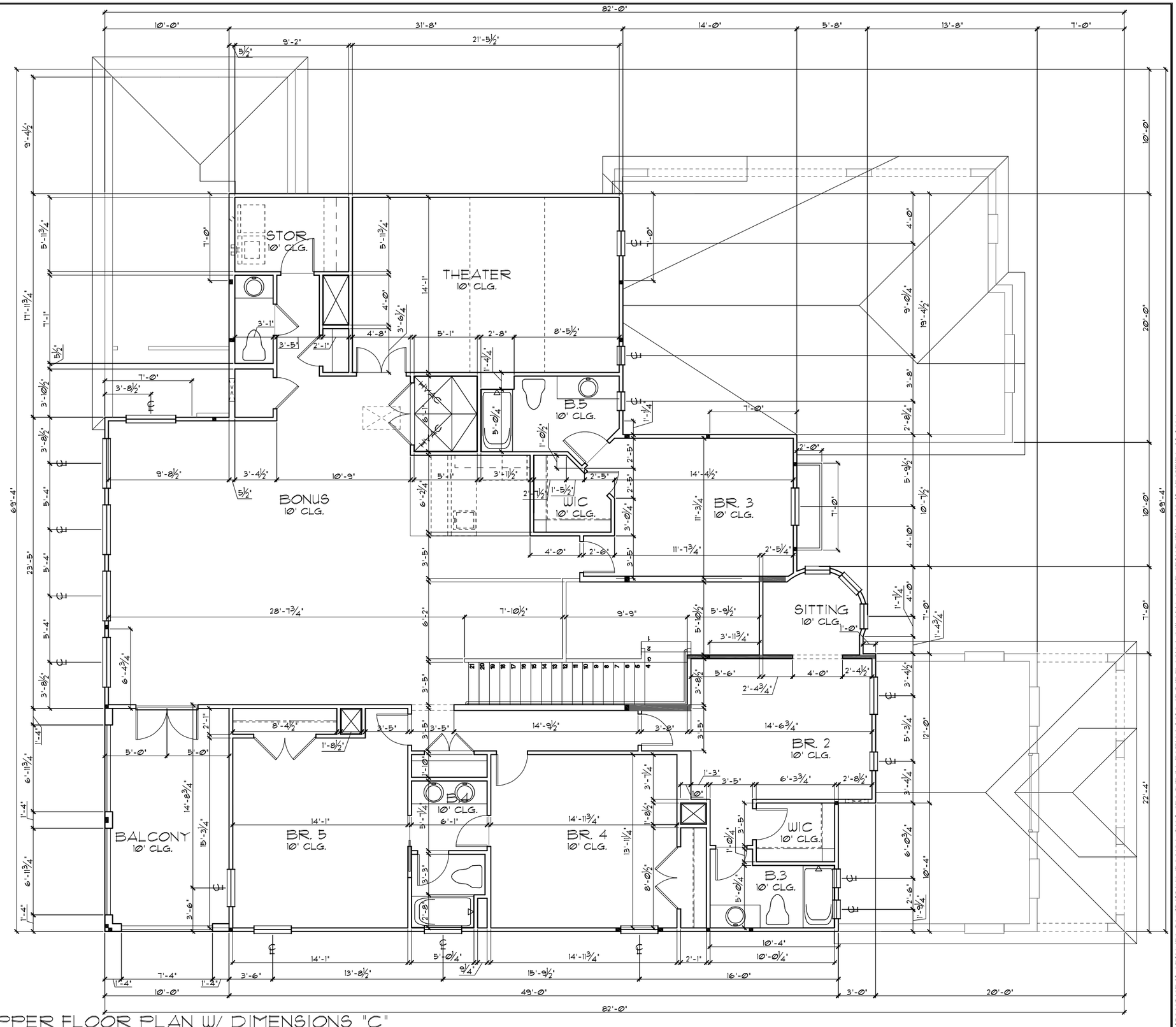

UPPER FLOOR PLAN W/ DIMENSIONS "C"

1/8"=1'-0" (11X17) 1/4"=1'-0" (22X34)

GENERAL NOTES

1. CONTRACTOR TO VERIFY ALL DIMENSIONS ON JOB SITE.
2. DO NOT SCALE PRINTS! CONSTRUCTION TO BE FROM CALCULATED DIMENSIONS ONLY. ANY DISCREPANCIES OR ERRORS TO BE REPORTED PROMPTLY TO SUPERVISOR FOR CLARIFICATION.
3. ALL INTERIOR FRAME WALL DIMENSIONS TO BE 3½" UNLESS NOTED OTHERWISE.
4. ALL EXTERIOR BLOCK WALL DIMENSIONS TO BE 7½" UNLESS NOTED OTHERWISE.
5. PULL ALL DIMENSIONS FROM THE REAR OF PLAN.

THIS STRUCTURE IS DESIGNED TO WITHSTAND 150 MPH WINDS PER THE 7th EDITION, 2020 OF THE FLORIDA BUILDING CODE RESIDENTIAL AND IS CERTIFIED AS SUCH

LOT SPECIFIC INFORMATION

SIGNATURE SERIES

© COPYRIGHT 2012
Park Square Homes hereby reserves its common law copyrights and other copyrights in these plans, ideas, and design. These plans, ideas and designs are not to be copied or changed in any manner or form whatsoever, nor are they to be assigned to any third party without first obtaining the express written permission from Park Square Homes.

REVISIONS	BY
05-29-20	RDC

Engineering By:
DBE and C
MICHAEL A. THOMPSON
PE 47509
PHONE 407-721-2292

A DIVISION OF PARK SQUARE ENTERPRISES, INC.
5200 Vineland Road, Suite 200
Orlando, Florida 32811
Phone: (407) 529 - 3000

Park Square HOMES

UPPER FLOOR PLAN W/ DIMENSIONS

5803T-SIDE LOAD

THE CARRARA II

DATE	09-01-14
SCALE	AS NOTED
DRAWN	RDC
JOB	N/A
SHEET	04C.1
OF	SHEETS

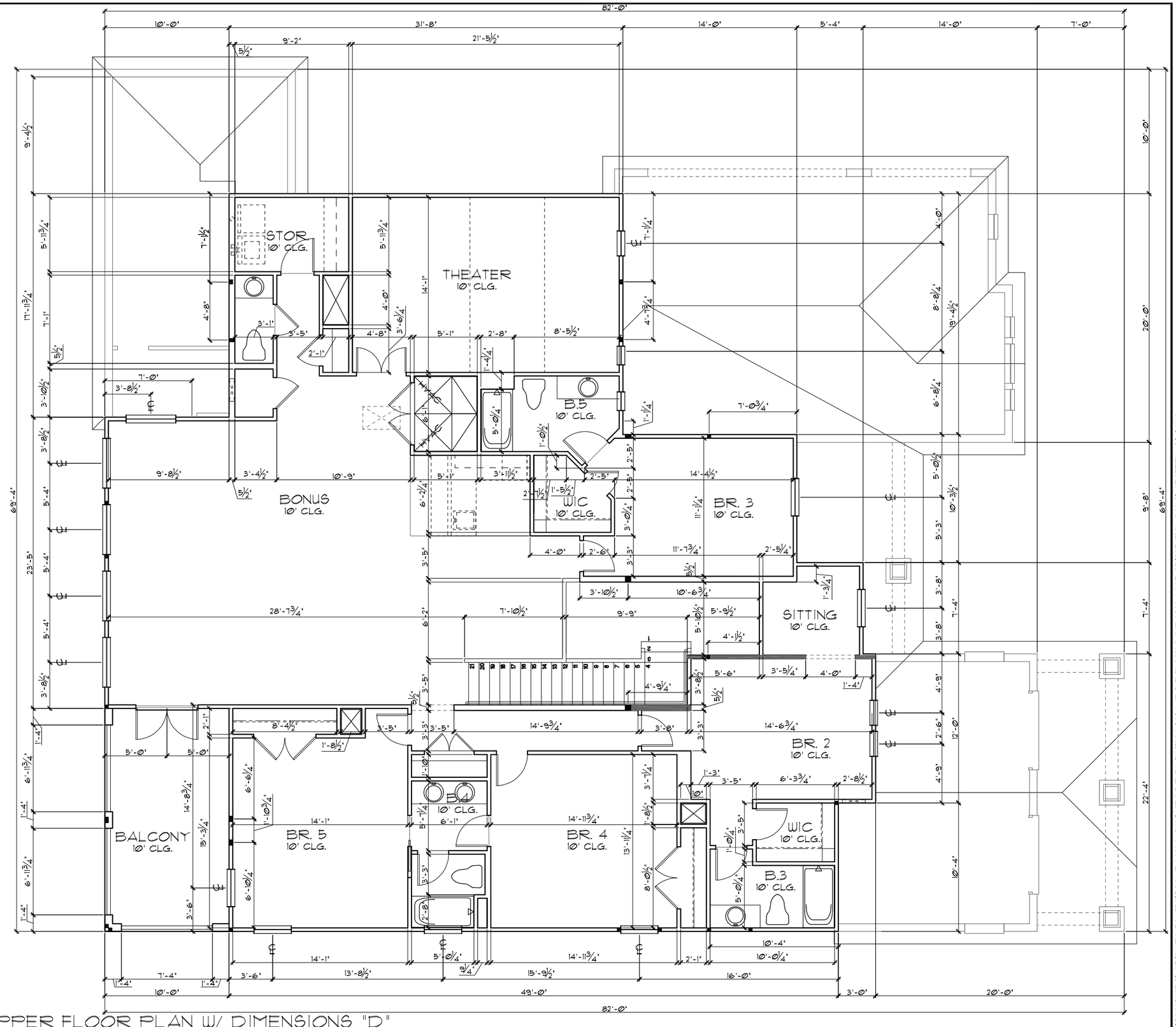

UPPER FLOOR PLAN W/ DIMENSIONS "D"

1/8"=1'-0" (11X17) 1/4"=1'-0" (22X34)

GENERAL NOTES

1. CONTRACTOR TO VERIFY ALL DIMENSIONS ON JOB SITE.
2. DO NOT SCALE PRINTS! CONSTRUCTION TO BE FROM CALCULATED DIMENSIONS ONLY. ANY DISCREPANCIES OR ERRORS TO BE REPORTED PROMPTLY TO SUPERVISOR FOR CLARIFICATION.
3. ALL INTERIOR FRAME WALL DIMENSIONS TO BE 3½" UNLESS NOTED OTHERWISE.
4. ALL EXTERIOR BLOCK WALL DIMENSIONS TO BE 7½" UNLESS NOTED OTHERWISE.
5. PULL ALL DIMENSIONS FROM THE REAR OF PLAN.

THIS STRUCTURE IS DESIGNED TO WITHSTAND 150 MPH WINDS PER THE 7th EDITION, 2020 OF THE FLORIDA BUILDING CODE RESIDENTIAL AND IS CERTIFIED AS SUCH

SIGNATURE SERIES

LOT SPECIFIC INFORMATION

© COPYRIGHT 2012
Park Square Homes hereby reserves its common law copyrights and other copyrights in these plans, ideas, and design. These plans, ideas and designs are not to be copied or changed in any manner or form whatsoever, nor are they to be assigned to any third party without first obtaining the express written permission from Park Square Homes.

REVISIONS	BY
05-29-20	RDC

Engineering By:
DBE and C
MICHAEL A. THOMPSON
PE 47509
PHONE 407-721-2292

A DIVISION OF PARK SQUARE ENTERPRISES, INC.
5200 Vineland Road, Suite 200
Orlando, Florida 32811
Phone: (407) 529 - 3000

Park Square HOMES

UPPER FLOOR PLAN W/ DIMENSIONS

5803T-SIDE LOAD

THE CARRARA II

DATE	09-01-14
SCALE	AS NOTED
DRAWN	RDC
JOB	N/A
SHEET	04D.1
OF	SHEETS

LOAD INFORMATION

PER 7TH EDITION, 2020 FLORIDA BUILDING RESIDENTAIL CODE

DEAD LOADS

FLOOR:	STRUCTURE	7 PSF
	CEILINGS	3 PSF
	MECH/ELEC	5 PSF
	PARTITIONS	5 PSF
	TOTAL	20 PSF
ROOF:	SHEATHING	5 PSF
	STRUCTURE	7 PSF
	CEILINGS	3 PSF
	MECH/ELEC	5 PSF
	TOTAL	20 PSF

FLOOR LIVE LOADS

RESIDENTIAL FLOOR:	40 PSF
UNINHABITABLE ATTIC WITHOUT STORAGE:	10 PSF
UNINHABITABLE ATTIC W/LIMITED STORAGE:	20 PSF
ROOMS OTHER THAN SLEEPING ROOM:	40 PSF
SLEEPING ROOM:	30 PSF
STAIR LIVE LOAD:	40 PSF

ROOF LIVE LOADS

MINIMUM ROOF LIVE LOAD (PSF)
TRIBUTARY LOADED AREA (SQ. FT.)
FOR ANY STRUCTURAL MEMBER

ROOF SLOPE	0-200	201-600	OVER 600
0:12 < 4:12	20	16	12
≥ 4:12 < 12:12	16	14	12
≥ 12:12	12	12	12

WIND INFORMATION

PER 7TH EDITION, 2020 FLORIDA BUILDING RESIDENTAIL CODE

1. BASIC WIND SPEED: 150 MPH
2. WIND IMPORTANCE FACTOR: N/A
3. BUILDING CATEGORY: C
4. INTERNAL PRESSURE COEFFICIENT: +/-.18, INCLUDED IN NOTE #5
5. COMPONENT / CLADDING DESIGN WIND PRESSURE: SEE PLAN
   - + XXX / - XXX DESIGN WIND PRESSURE IAW FLA RESIDENTIAL CODE, SECTION R301

NOTE: DESIGN PRESSURES BASED ON BASIC WIND SPEED AND NOT ULTIMATE WIND SPEED.

GENERAL NOTES

1. PROVIDE RECESS HOT & COLD WATER WITH DRAIN @ WASHER SPACE.
2. VENT DRYER THRU ROOF.
3. PROVIDE COLD WATER LINE FOR ICE MAKER LINE @ REF. SPACE.
4. DO NOT SCALE PRINTS! CONSTRUCTION TO BE FROM CALCULATED DIMENSIONS ONLY. ANY DISCREPANCIES OR ERRORS TO BE REPORTED PROMPTLY TO SUPERVISOR FOR CLARIFICATION.
5. MECHANICAL EQUIPMENT LOCATION TO BE DETERMINED BY COMMUNITY STANDARDS AND APPLICABLE COUNTY CODES.
6. DENOTES CONC. BLOCK WALL HGT. @ N/A
   DENOTES CONC. BLOCK WALL HGT. @ N/A
7. REFER TO TYPICAL DETAIL SHEET FOR EXTERIOR WALL FINISH SPECIFICATIONS
8. REFER TO DETAIL SHEETS FOR FLASHING REQUIREMENTS AT ALL WOOD TO MASONRY INTERFACES
9. ANCHOR THE CONDENSER UNIT TO SLAB PER CODE: M 307.3 + 1307.3.1
10. ALL INTER. FIRST FLOOR CEILINGS AT 12'-0" UNLESS NOTED OTHERWISE.
    ALL INTER. SECOND FLOOR CEILINGS AT 10'-0" UNLESS NOTED OTHERWISE.

NOTE: DOOR FROM HOUSE TO GARAGE MUST BE SOLID WOOD DOORS NO LESS 1 3/8" IAW R302.5.1

EGRESS WINDOW SCHEDULE

SH25	33 1/2" H. X 30" W.	MIN. NET CLEAR OPENING 5.7 SQFT

NOTE: FIREBLOCKING AND DRAFTSTOPPING SHALL BE PROVIDED IN COMPLIANCE WITH FBC-2020 -R302.11 & R302.12

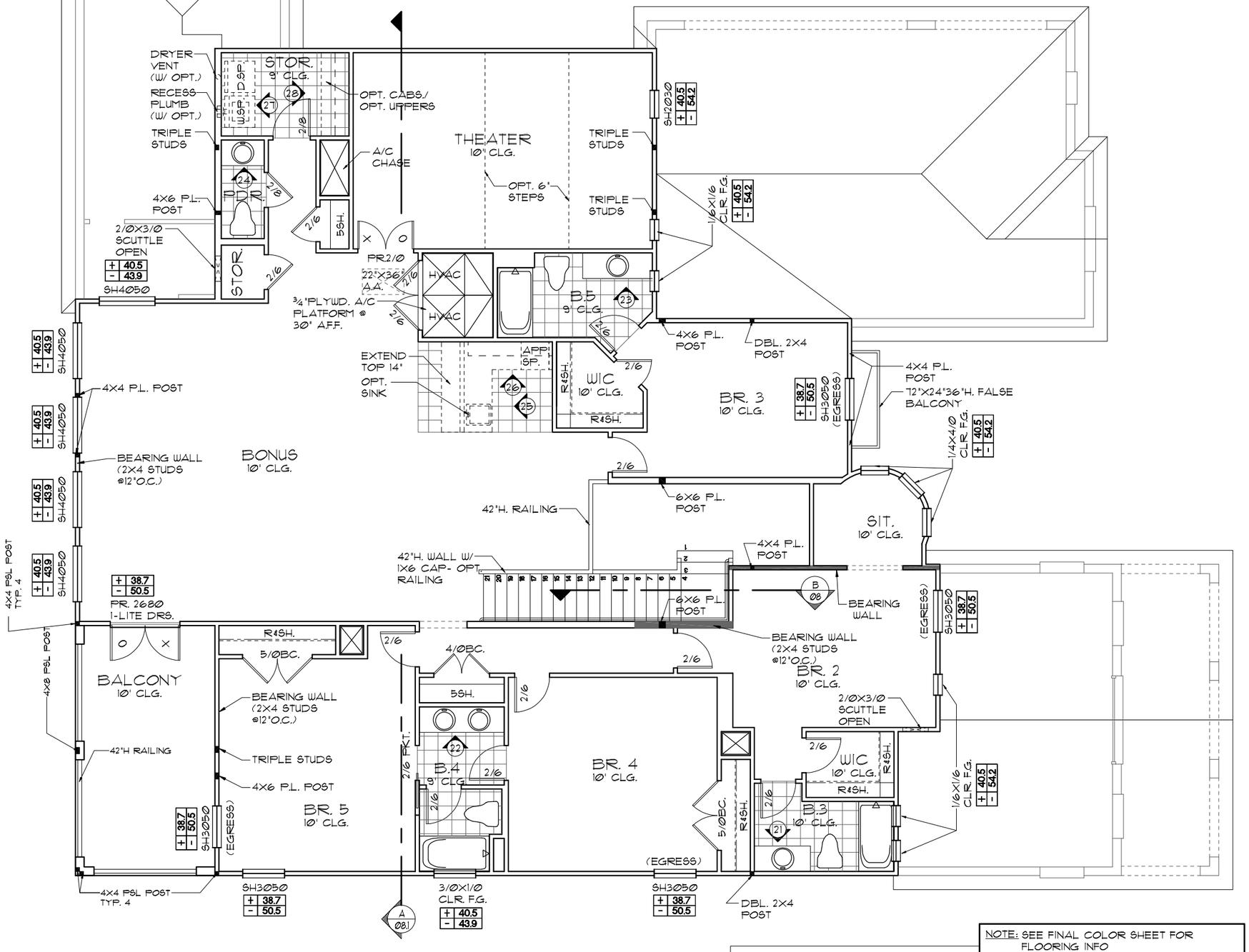

UPPER FLOOR PLAN W/ NOTES "A"

1/8"=1'-0" (11X17) 1/4"=1'-0" (22X34)

NOTE: ALL WINDOWS SILLS TO BE 24"MIN. A.F.F.

NOTE: SEE FINAL COLOR SHEET FOR FLOORING INFO

NOTE: ALL INTERIOR DOORS ON THIS FLOOR TO BE: 8'-0" U.N.O.

THIS STRUCTURE IS DESIGNED TO WITHSTAND 150 MPH WINDS PER THE 7th EDITION, 2020 OF THE FLORIDA BUILDING CODE RESIDENTIAL AND IS CERTIFIED AS SUCH

LOT SPECIFIC INFORMATION

© COPYRIGHT 2012
Park Square Homes hereby reserves its common law copyrights and other copyrights in these plans, ideas, and design. These plans, ideas and designs are not to be copied or changed in any manner or form whatsoever, nor are they to be assigned to any third party without first obtaining the express written permission from Park Square Homes.

SIGNATURE SERIES

REVISIONS	BY
05-29-20	RDC

Engineering By:
DBE and C
MICHAEL A. THOMPSON
PE 47509
PHONE 407-721-2292

A DIVISION OF PARK SQUARE ENTERPRISES, INC.
5200 Vineland Road, Suite 200
Orlando, Florida 32811
Phone: (407) 529 - 3000

Park Square HOMES

UPPER FLOOR PLAN W/ NOTES

5803T-SIDE LOAD

THE CARRARA II

DATE	09-01-14
SCALE	AS NOTED
DRAWN	RDC
JOB	N/A
SHEET	05A.1
OF	SHEETS

LOAD INFORMATION

PER 7TH EDITION, 2020 FLORIDA BUILDING RESIDENTAIL CODE

DEAD LOADS

FLOOR:	STRUCTURE	7 PSF
	CEILINGS	3 PSF
	MECH/ELEC	5 PSF
	PARTITIONS	5 PSF
	TOTAL	20 PSF
ROOF:	SHEATHING	5 PSF
	STRUCTURE	7 PSF
	CEILINGS	3 PSF
	MECH/ELEC	5 PSF
	TOTAL	20 PSF

FLOOR LIVE LOADS

RESIDENTIAL FLOOR:	40 PSF
UNINHABITABLE ATTIC WITHOUT STORAGE:	10 PSF
UNINHABITABLE ATTIC W/LIMITED STORAGE:	20 PSF
ROOMS OTHER THAN SLEEPING ROOM:	40 PSF
SLEEPING ROOM:	30 PSF
STAIR LIVE LOAD:	40 PSF

ROOF LIVE LOADS

MINIMUM ROOF LIVE LOAD (PSF)
TRIBUTARY LOADED AREA (SQ. FT.)
FOR ANY STRUCTURAL MEMBER

ROOF SLOPE	0-200	201-600	OVER 600
0:12 < 4:12	20	16	12
≥ 4:12 < 12:12	16	14	12
≥ 12:12	12	12	12

WIND INFORMATION

PER 7TH EDITION, 2020 FLORIDA BUILDING RESIDENTAIL CODE

1. BASIC WIND SPEED: 150 MPH
2. WIND IMPORTANCE FACTOR: N/A
3. BUILDING CATEGORY: C
4. INTERNAL PRESSURE COEFFICIENT: +/-.18, INCLUDED IN NOTE #5
5. COMPONENT / CLADDING DESIGN WIND PRESSURE: SEE PLAN
   - + XXX / - XXX DESIGN WIND PRESSURE IAW FLA RESIDENTIAL CODE, SECTION R301

NOTE: DESIGN PRESSURES BASED ON BASIC WIND SPEED AND NOT ULTIMATE WIND SPEED.

GENERAL NOTES

1. PROVIDE RECESS HOT & COLD WATER WITH DRAIN @ WASHER SPACE.
2. VENT DRYER THRU ROOF.
3. PROVIDE COLD WATER LINE FOR ICE MAKER LINE @ REF. SPACE.
4. DO NOT SCALE PRINTS! CONSTRUCTION TO BE FROM CALCULATED DIMENSIONS ONLY. ANY DISCREPANCIES OR ERRORS TO BE REPORTED PROMPTLY TO SUPERVISOR FOR CLARIFICATION.
5. MECHANICAL EQUIPMENT LOCATION TO BE DETERMINED BY COMMUNITY STANDARDS AND APPLICABLE COUNTY CODES.
6. DENOTES CONC. BLOCK WALL HGT. @ N/A
   DENOTES CONC. BLOCK WALL HGT. @ N/A
7. REFER TO TYPICAL DETAIL SHEET FOR EXTERIOR WALL FINISH SPECIFICATIONS
8. REFER TO DETAIL SHEETS FOR FLASHING REQUIREMENTS AT ALL WOOD TO MASONRY INTERFACES
9. ANCHOR THE CONDENSER UNIT TO SLAB PER CODE: M 307.3 + 1307.3.1
10. ALL INTER. FIRST FLOOR CEILINGS AT 12'-0" UNLESS NOTED OTHERWISE.
    ALL INTER. SECOND FLOOR CEILINGS AT 10'-0" UNLESS NOTED OTHERWISE.

NOTE: DOOR FROM HOUSE TO GARAGE MUST BE SOLID WOOD DOORS NO LESS 1 3/8" IAW R302.5.1

EGRESS WINDOW SCHEDULE

SH25	33 1/2" H. X 30" W.	MIN. NET CLEAR OPENING 5.7 SQFT

NOTE: FIREBLOCKING AND DRAFTSTOPPING SHALL BE PROVIDED IN COMPLIANCE WITH FBC-2020 -R302.11 & R302.12

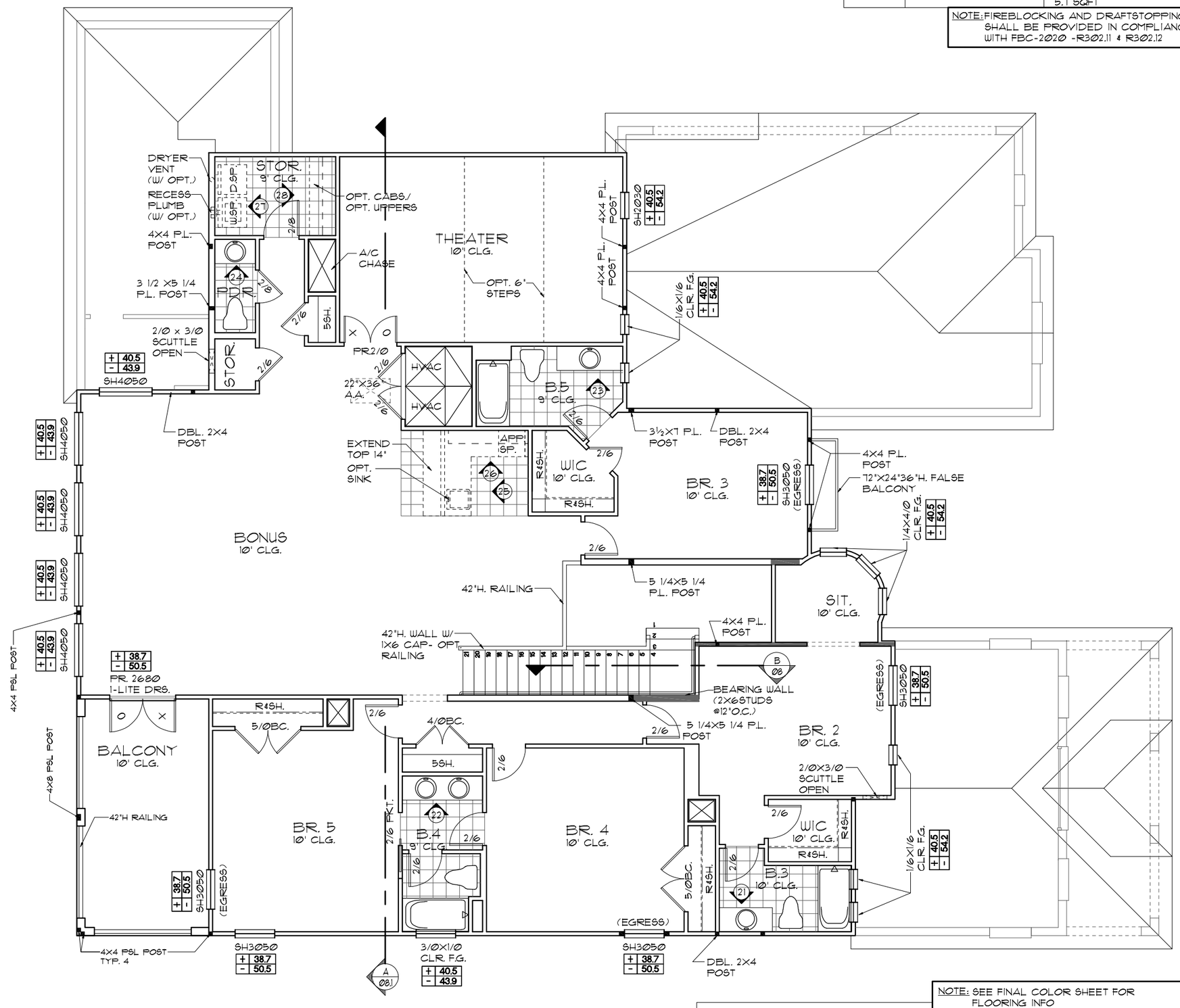

UPPER FLOOR PLAN W/ NOTES "C"

1/8"=1'-0" (11X17) 1/4"=1'-0" (22X34)

NOTE: ALL WINDOWS SILLS TO BE 24"MIN. A.F.F.

NOTE: SEE FINAL COLOR SHEET FOR FLOORING INFO

NOTE: ALL INTERIOR DOORS ON THIS FLOOR TO BE: 6'-8" U.N.O.

THIS STRUCTURE IS DESIGNED TO WITHSTAND 150 MPH WINDS PER THE 7th EDITION, 2020 OF THE FLORIDA BUILDING CODE RESIDENTIAL AND IS CERTIFIED AS SUCH

LOT SPECIFIC INFORMATION

© COPYRIGHT 2012
Park Square Homes hereby reserves its common law copyrights and other copyrights in these plans, ideas, and design. These plans, ideas and designs are not to be copied or changed in any manner or form whatsoever, nor are they to be assigned to any third party without first obtaining the express written permission from Park Square Homes.

SIGNATURE SERIES

REVISIONS	BY
05-29-20	RDC

Engineering By:
DBE and C
MICHAEL A. THOMPSON
PE 47509
PHONE 407-721-2292

A DIVISION OF PARK SQUARE ENTERPRISES, INC.
5200 Vineland Road, Suite 200
Orlando, Florida 32811
Phone: (407) 529 - 3000

Park Square HOMES

UPPER FLOOR PLAN W/ NOTES

5803T-SIDE LOAD

THE CARRARA II

DATE	09-01-14
SCALE	AS NOTED
DRAWN	RDC
JOB	N/A
SHEET	05C.1
OF	SHEETS

LOAD INFORMATION

PER 7TH EDITION, 2020 FLORIDA BUILDING RESIDENTAIL CODE

DEAD LOADS

FLOOR:	STRUCTURE	7 PSF
	CEILINGS	3 PSF
	MECH/ELEC	5 PSF
	PARTITIONS	5 PSF
	TOTAL	20 PSF
ROOF:	SHEATHING	5 PSF
	STRUCTURE	7 PSF
	CEILINGS	3 PSF
	MECH/ELEC	5 PSF
	TOTAL	20 PSF

FLOOR LIVE LOADS

RESIDENTIAL FLOOR:	40 PSF
UNINHABITABLE ATTIC WITHOUT STORAGE:	10 PSF
UNINHABITABLE ATTIC W/LIMITED STORAGE:	20 PSF
ROOMS OTHER THAN SLEEPING ROOM:	40 PSF
SLEEPING ROOM:	30 PSF
STAIR LIVE LOAD:	40 PSF

ROOF LIVE LOADS

MINIMUM ROOF LIVE LOAD (PSF)
TRIBUTARY LOADED AREA (SQ. FT.)
FOR ANY STRUCTURAL MEMBER

ROOF SLOPE	0-200	201-600	OVER 600
0:12 < 4:12	20	16	12
≥ 4:12 < 12:12	16	14	12
≥ 12:12	12	12	12

WIND INFORMATION

PER 7TH EDITION, 2020 FLORIDA BUILDING RESIDENTAIL CODE

1. BASIC WIND SPEED: 150 MPH
2. WIND IMPORTANCE FACTOR: N/A
3. BUILDING CATEGORY: C
4. INTERNAL PRESSURE COEFFICIENT: +/-.18, INCLUDED IN NOTE #5
5. COMPONENT / CLADDING DESIGN WIND PRESSURE: SEE PLAN

   + XXX / - XXX DESIGN WIND PRESSURE IAW FLA RESIDENTIAL CODE, SECTION R301

   NOTE: DESIGN PRESSURES BASED ON BASIC WIND SPEED AND NOT ULTIMATE WIND SPEED.

GENERAL NOTES

1. PROVIDE RECESS HOT & COLD WATER WITH DRAIN @ WASHER SPACE.
2. VENT DRYER THRU ROOF.
3. PROVIDE COLD WATER LINE FOR ICE MAKER LINE @ REF. SPACE.
4. DO NOT SCALE PRINTS! CONSTRUCTION TO BE FROM CALCULATED DIMENSIONS ONLY. ANY DISCREPANCIES OR ERRORS TO BE REPORTED PROMPTLY TO SUPERVISOR FOR CLARIFICATION.
5. MECHANICAL EQUIPMENT LOCATION TO BE DETERMINED BY COMMUNITY STANDARDS AND APPLICABLE COUNTY CODES.
6. DENOTES CONC. BLOCK WALL HGT. @ N/A

   DENOTES CONC. BLOCK WALL HGT. @ N/A
7. REFER TO TYPICAL DETAIL SHEET FOR EXTERIOR WALL FINISH SPECIFICATIONS
8. REFER TO DETAIL SHEETS FOR FLASHING REQUIREMENTS AT ALL WOOD TO MASONRY INTERFACES
9. ANCHOR THE CONDENSER UNIT TO SLAB PER CODE: M 307.3 + 1307.3.1
10. ALL INTER. FIRST FLOOR CEILINGS AT 12'-0" UNLESS NOTED OTHERWISE.

    ALL INTER. SECOND FLOOR CEILINGS AT 10'-0" UNLESS NOTED OTHERWISE.

NOTE: DOOR FROM HOUSE TO GARAGE MUST BE SOLID WOOD DOORS NO LESS 1 3/8" IAW R302.5.1

EGRESS WINDOW SCHEDULE

SH25	33 1/2" H. X 30" W.	MIN. NET CLEAR OPENING 5.7 SQFT

NOTE: FIREBLOCKING AND DRAFTSTOPPING SHALL BE PROVIDED IN COMPLIANCE WITH FBC-2020 -R302.11 & R302.12

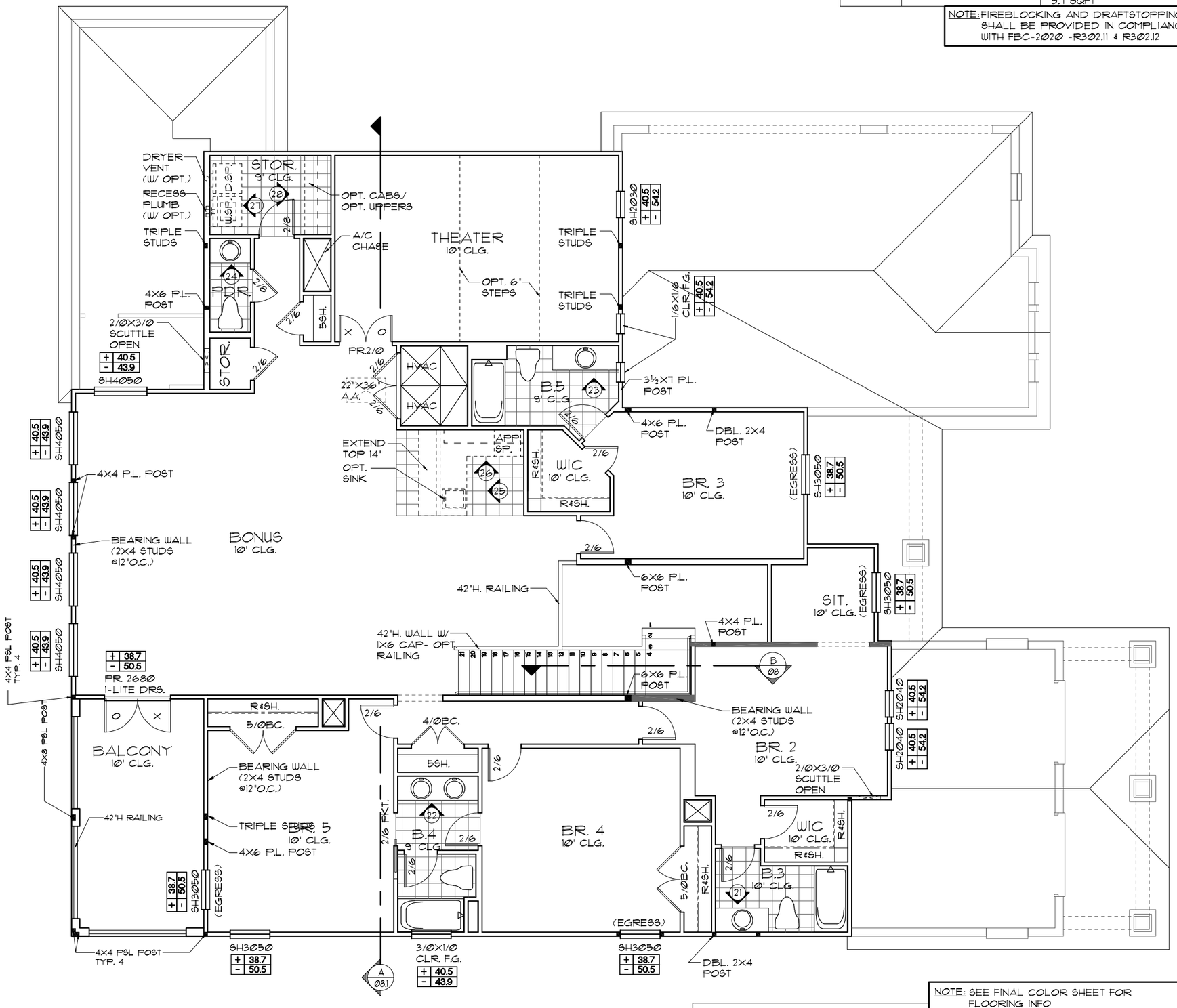

UPPER FLOOR PLAN W/ NOTES "D"

1/8"=1'-0" (11X17) 1/4"=1'-0" (22X34)

NOTE: ALL WINDOWS SILLS TO BE 24"MIN. A.F.F.

NOTE: SEE FINAL COLOR SHEET FOR FLOORING INFO

NOTE: ALL INTERIOR DOORS ON THIS FLOOR TO BE: 8'-0" U.N.O.

THIS STRUCTURE IS DESIGNED TO WITHSTAND 150 MPH WINDS PER THE 7th EDITION, 2020 OF THE FLORIDA BUILDING CODE RESIDENTIAL AND IS CERTIFIED AS SUCH

LOT SPECIFIC INFORMATION

© COPYRIGHT 2012 Park Square Homes hereby reserves its common law copyrights and other copyrights in these plans, ideas, and design. These plans, ideas and designs are not to be copied or changed in any manner or form whatsoever, nor are they to be assigned to any third party without first obtaining the express written permission from Park Square Homes.

SIGNATURE SERIES

REVISIONS	BY
05-29-20	RDC

Engineering By:
DBE and C
MICHAEL A. THOMPSON
PE 47509
PHONE 407-721-2292

A DIVISION OF PARK SQUARE ENTERPRISES, INC.
5200 Vineland Road, Suite 200
Orlando, Florida 32811
Phone: (407) 529 - 3000

Park Square HOMES

UPPER FLOOR PLAN W/ NOTES

5803T-SIDE LOAD

THE CARRARA II

DATE	09-01-14
SCALE	AS NOTED
DRAWN	RDC
JOB	N/A
SHEET	05D.1
OF	SHEETS

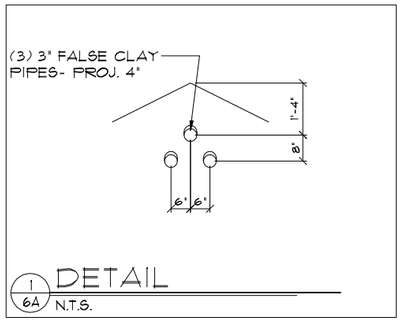

1/6A DETAIL
N.T.S.

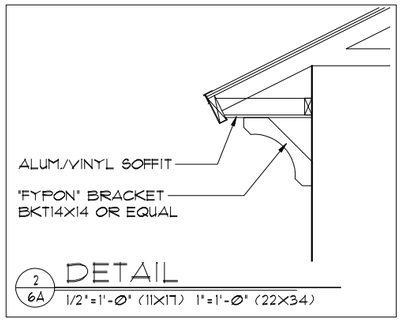

2/6A DETAIL
1/2"=1'-0" (11X17) 1"=1'-0" (22X34)

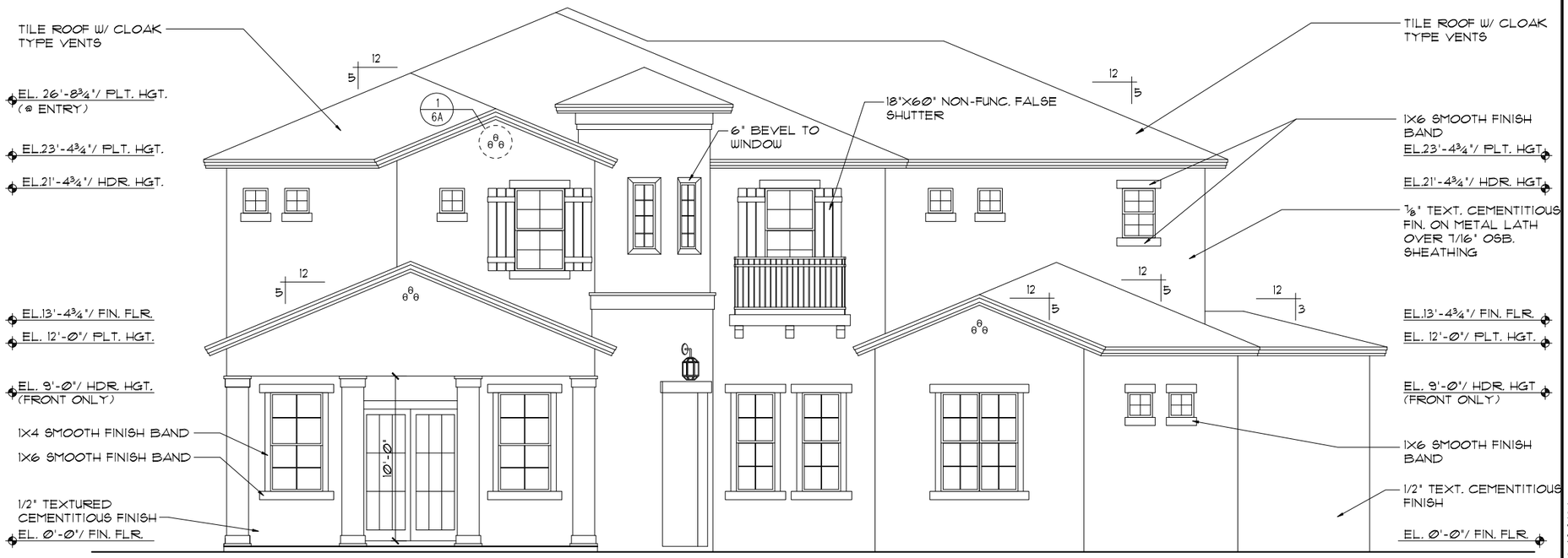

FRONT ELEVATION "A"
1/8"=1'-0" (11X17) 1/4"=1'-0" (22X34)

EXTERIOR FINISH NOTES

1. LATH TO BE ATTACHED IAW R703.7.1 OF THE 7TH EDITION, FBCR. 2020
2. PLASTERING TO BE WITH PORTLAND CEMENT, INSTALLED IAW R703.7.2 OF THE 7TH EDITION, FBCR. 2020
3. WEEP SCREED TO BE INSTALLED IAW R703.7.2.1 OF THE 7TH EDITION, FBCR. 2020
4. WATER RESISTANT BARRIER TO BE INSTALLED IAW R703.7.3 OF THE 7TH EDITION, FBCR. 2020
5. "ZIP SYSTEMS" WALL SHEATHING MAY BE USED AS AN ALTERNATIVE FOR WALL SHEATHING AND VAPOR BARRIER, ON EXTERIOR WALLS.

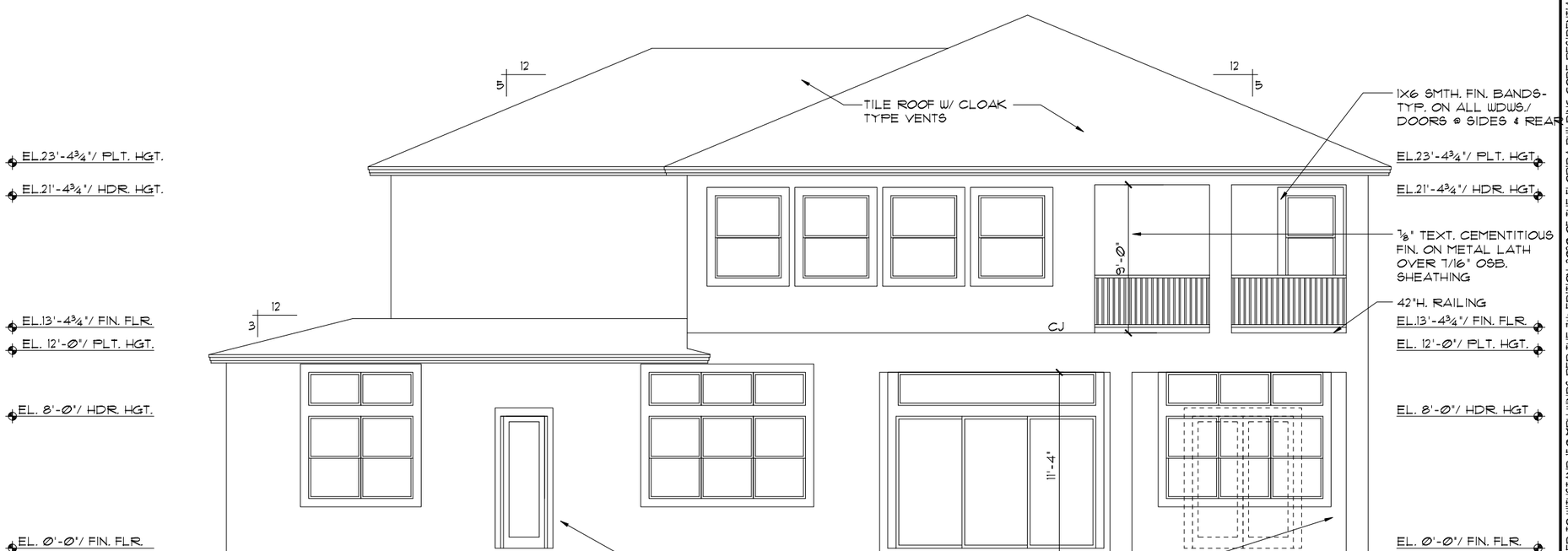

REAR ELEVATION "A"
1/8"=1'-0" (11X17) 1/4"=1'-0" (22X34)

THIS STRUCTURE IS DESIGNED TO WITHSTAND 150 MPH WINDS PER THE 7th EDITION, 2020 OF THE FLORIDA BUILDING CODE RESIDENTIAL AND IS CERTIFIED AS SUCH

SIGNATURE SERIES

LOT SPECIFIC INFORMATION

© COPYRIGHT 2012 Park Square Homes hereby reserves its common law copyrights and other copyrights in these plans, ideas, and design. These plans, ideas and designs are not to be copied or changed in any manner or form whatsoever, nor are they to be assigned to any third party without first obtaining the express written permission from Park Square Homes.

REVISIONS	BY
05-29-20	RDC

Engineering By:
DBE and C
MICHAEL A. THOMPSON
PE 47509
PHONE 407-721-2292

A DIVISION OF PARK SQUARE ENTERPRISES, INC.
5200 Vineland Road, Suite 200
Orlando, Florida 32811
Phone: (407) 529 - 3000

Park Square HOMES

EXTERIOR ELEVATION "A" FRONT AND REAR

5803T-SIDE LOAD

THE CARRARA II

DATE	09-01-14
SCALE	AS NOTED
DRAWN	RDC
JOB	N/A
SHEET	06A.1
OF	SHEETS

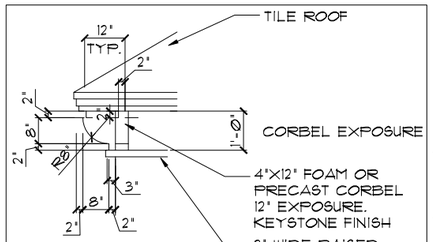

1/06C DETAIL
1/4"=1'-0" (11X17) 1/2"=1'-0" (22X34)

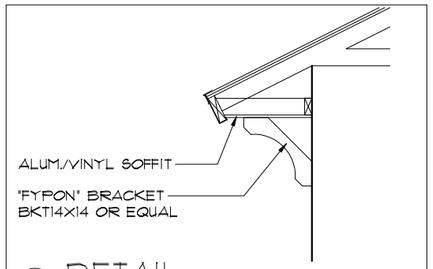

2/06C DETAIL
1/2"=1'-0" (11X17) 1"=1'-0" (22X34)

EXTERIOR FINISH NOTES

1. LATH TO BE ATTACHED IAW R703.7.1 OF THE 7TH EDITION, FBCR. 2020
2. PLASTERING TO BE WITH PORTLAND CEMENT, INSTALLED IAW R703.7.2 OF THE 7TH EDITION, FBCR. 2020
3. WEEP SCREED TO BE INSTALLED IAW R703.7.2.1 OF THE 7TH EDITION, FBCR. 2020
4. WATER RESISTANT BARRIER TO BE INSTALLED IAW R703.7.3 OF THE 7TH EDITION, FBCR. 2020
5. "ZIP SYSTEMS" WALL SHEATHING MAY BE USED AS AN ALTERNATIVE FOR WALL SHEATHING AND VAPOR BARRIER, ON EXTERIOR WALLS.

FRONT ELEVATION "C"

1/8"=1'-0" (11X17) 1/4"=1'-0" (22X34)

REAR ELEVATION "C"

1/8"=1'-0" (11X17) 1/4"=1'-0" (22X34)

THIS STRUCTURE IS DESIGNED TO WITHSTAND 150 MPH WINDS PER THE 7th EDITION, 2020 OF THE FLORIDA BUILDING CODE RESIDENTIAL AND IS CERTIFIED AS SUCH

LOT SPECIFIC INFORMATION

© COPYRIGHT 2012
Park Square Homes hereby reserves its common law copyrights and other copyrights in these plans, ideas, and design. These plans, ideas and designs are not to be copied or changed in any manner or form whatsoever, nor are they to be assigned to any third party without first obtaining the express written permission from Park Square Homes.

SIGNATURE SERIES

REVISIONS	BY
05-29-20	RDC

Engineering By:
DBE and C
MICHAEL A. THOMPSON
PE 47509
PHONE 407-721-2292

A DIVISION OF PARK SQUARE ENTERPRISES, INC.
5200 Vineland Road, Suite 200
Orlando, Florida 32811
Phone: (407) 529 - 3000

Park Square HOMES

EXTERIOR ELEVATION "C"
FRONT AND REAR

5803T-SIDE LOAD

THE CARRARA II

DATE	09-01-14
SCALE	AS NOTED
DRAWN	RDC
JOB	N/A
SHEET	06C.1
OF	SHEETS

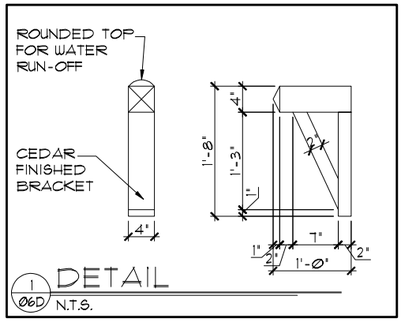

EXTERIOR FINISH NOTES

1. LATH TO BE ATTACHED IAW R703.7.1 OF THE 7TH EDITION, FBCR. 2020
2. PLASTERING TO BE WITH PORTLAND CEMENT, INSTALLED IAW R703.7.2 OF THE 7TH EDITION, FBCR. 2020
3. WEEP SCREED TO BE INSTALLED IAW R703.7.2.1 OF THE 7TH EDITION, FBCR. 2020
4. WATER RESISTANT BARRIER TO BE INSTALLED IAW R703.7.3 OF THE 7TH EDITION, FBCR. 2020
5. "ZIP SYSTEMS" WALL SHEATHING MAY BE USED AS AN ALTERNATIVE FOR WALL SHEATHING AND VAPOR BARRIER, ON EXTERIOR WALLS.

FRONT ELEVATION "D"

1/8"=1'-0" (11X17) 1/4"=1'-0" (22X34)

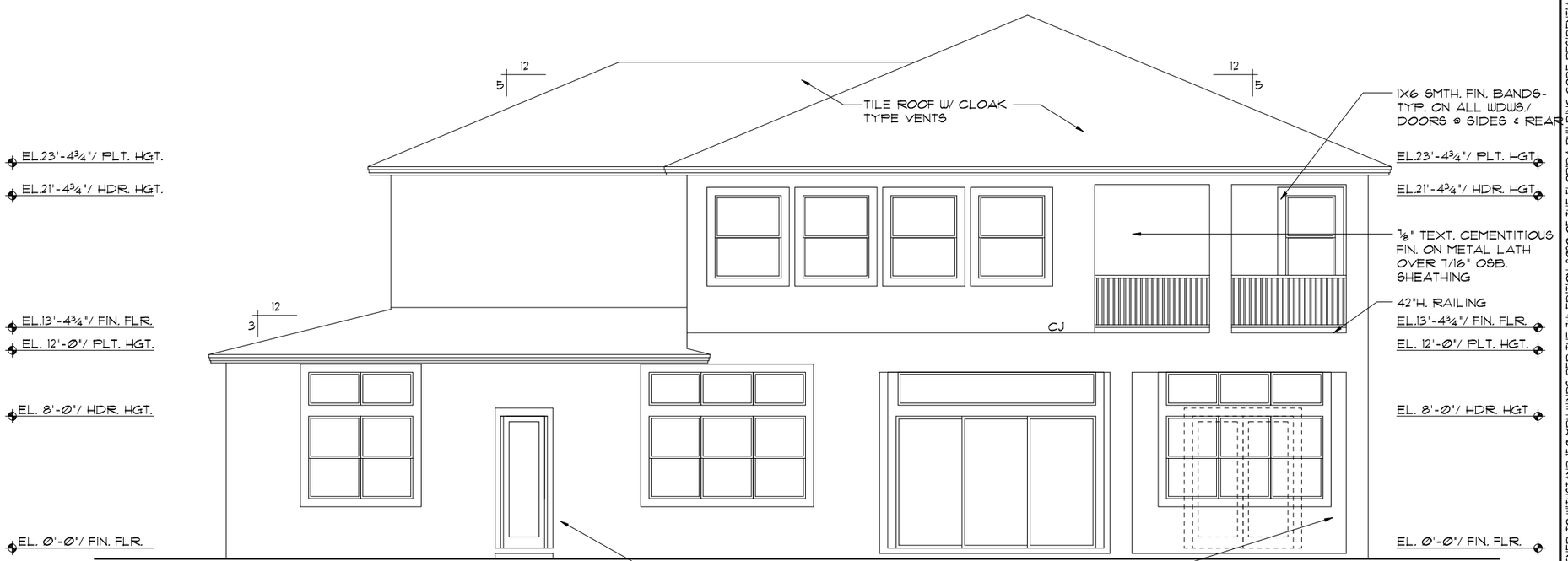

REAR ELEVATION "D"

1/8"=1'-0" (11X17) 1/4"=1'-0" (22X34)

THIS STRUCTURE IS DESIGNED TO WITHSTAND 150 MPH WINDS PER THE 7th EDITION, 2020 OF THE FLORIDA BUILDING CODE RESIDENTIAL AND IS CERTIFIED AS SUCH

LOT SPECIFIC INFORMATION

© COPYRIGHT 2012
Park Square Homes hereby reserves its common law copyrights and other copyrights in these plans, ideas, and design. These plans, ideas and designs are not to be copied or changed in any manner or form whatsoever, nor are they to be assigned to any third party without first obtaining the express written permission from Park Square Homes.

SIGNATURE SERIES

REVISIONS	BY
05-29-20	RDC

Engineering By:
DBE and C
MICHAEL A. THOMPSON
PE 47509
PHONE 407-721-2292

A DIVISION OF PARK SQUARE ENTERPRISES, INC.
5200 Vineland Road, Suite 200
Orlando, Florida 32811
Phone: (407) 529 - 3000

Park Square HOMES

EXTERIOR ELEVATION "D"
FRONT AND REAR

5803T-SIDE LOAD

THE CARRARA II

DATE	09-01-14
SCALE	AS NOTED
DRAWN	RDC
JOB	N/A
SHEET	06D.1
OF	SHEETS

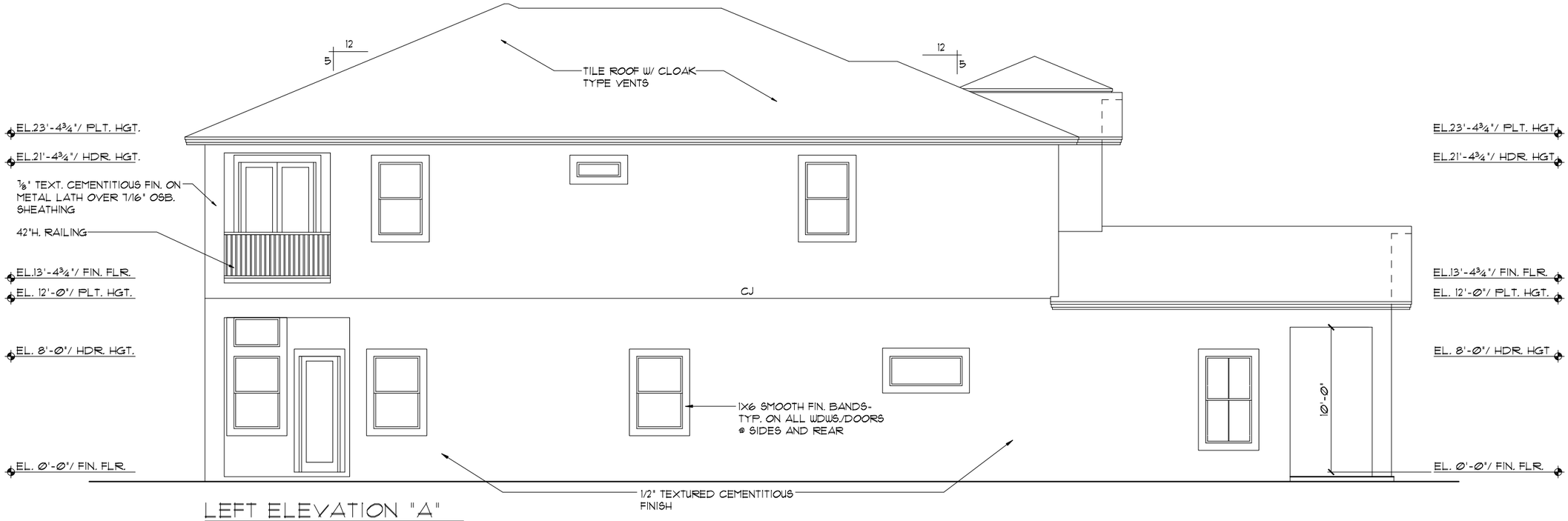

LEFT ELEVATION "A"

1/8"=1'-0" (11X17) 1/4"=1'-0" (22X34)

EXTERIOR FINISH NOTES

1. LATH TO BE ATTACHED IAW R703.7.1 OF THE 7TH EDITION, FBCR. 2020
2. PLASTERING TO BE WITH PORTLAND CEMENT, INSTALLED IAW R703.7.2 OF THE 7TH EDITION, FBCR. 2020
3. WEEP SCREED TO BE INSTALLED IAW R703.7.2.1 OF THE 7TH EDITION, FBCR. 2020
4. WATER RESISTANT BARRIER TO BE INSTALLED IAW R703.7.3 OF THE 7TH EDITION, FBCR. 2020
5. "ZIP SYSTEMS" WALL SHEATHING MAY BE USED AS AN ALTERNATIVE FOR WALL SHEATHING AND VAPOR BARRIER, ON EXTERIOR WALLS.

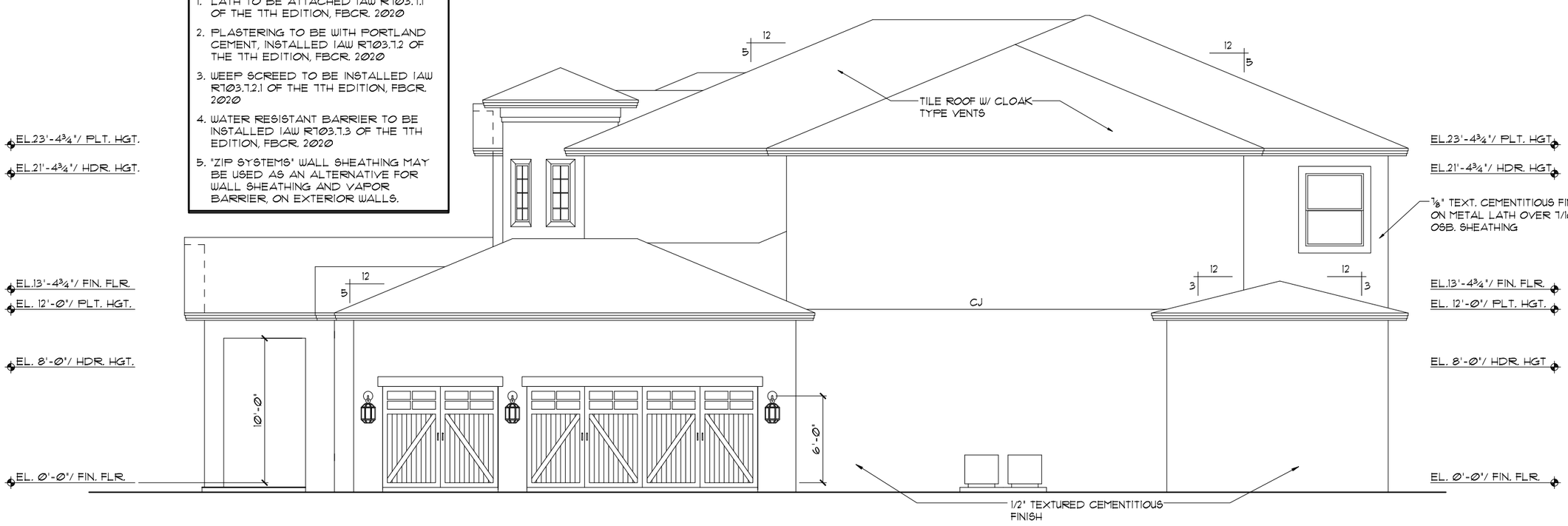

RIGHT ELEVATION "A"

1/8"=1'-0" (11X17) 1/4"=1'-0" (22X34)

THIS STRUCTURE IS DESIGNED TO WITHSTAND 150 MPH WINDS PER THE 7th EDITION, 2020 OF THE FLORIDA BUILDING CODE RESIDENTIAL AND IS CERTIFIED AS SUCH

LOT SPECIFIC INFORMATION

© COPYRIGHT 2012
Park Square Homes hereby reserves its common law copyrights and other copyrights in these plans, ideas, and design. These plans, ideas and designs are not to be copied or changed in any manner or form whatsoever, nor are they to be assigned to any third party without first obtaining the express written permission from Park Square Homes.

SIGNATURE SERIES

REVISIONS	BY
05-29-20	RDC

Engineering By:
DBE and C
MICHAEL A. THOMPSON
PE 47509
PHONE 407-721-2292

A DIVISION OF PARK SQUARE ENTERPRISES, INC.
5200 Vineland Road, Suite 200
Orlando, Florida 32811
Phone: (407) 529 - 3000

Park Square HOMES

EXTERIOR ELEVATION "A"
LEFT AND RIGHT

5803T-SIDE LOAD

THE CARRARA II

DATE	09-01-14
SCALE	AS NOTED
DRAWN	RDC
JOB	N/A
SHEET	07A.1
OF	SHEETS

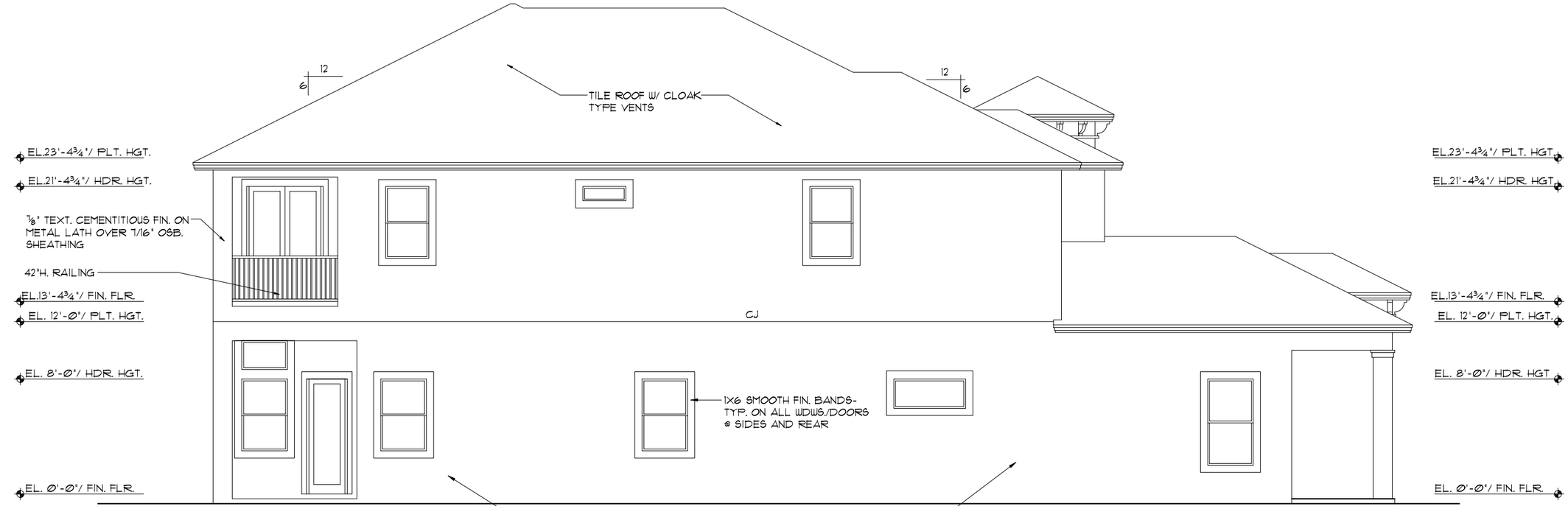

LEFT ELEVATION "C"

1/8"=1'-0" (11X17) 1/4"=1'-0" (22X34)

EXTERIOR FINISH NOTES

1. LATH TO BE ATTACHED IAW R703.7.1 OF THE 7TH EDITION, FBCR. 2020
2. PLASTERING TO BE WITH PORTLAND CEMENT, INSTALLED IAW R703.7.2 OF THE 7TH EDITION, FBCR. 2020
3. WEEP SCREED TO BE INSTALLED IAW R703.7.2.1 OF THE 7TH EDITION, FBCR. 2020
4. WATER RESISTANT BARRIER TO BE INSTALLED IAW R703.7.3 OF THE 7TH EDITION, FBCR. 2020
5. "ZIP SYSTEMS" WALL SHEATHING MAY BE USED AS AN ALTERNATIVE FOR WALL SHEATHING AND VAPOR BARRIER, ON EXTERIOR WALLS.

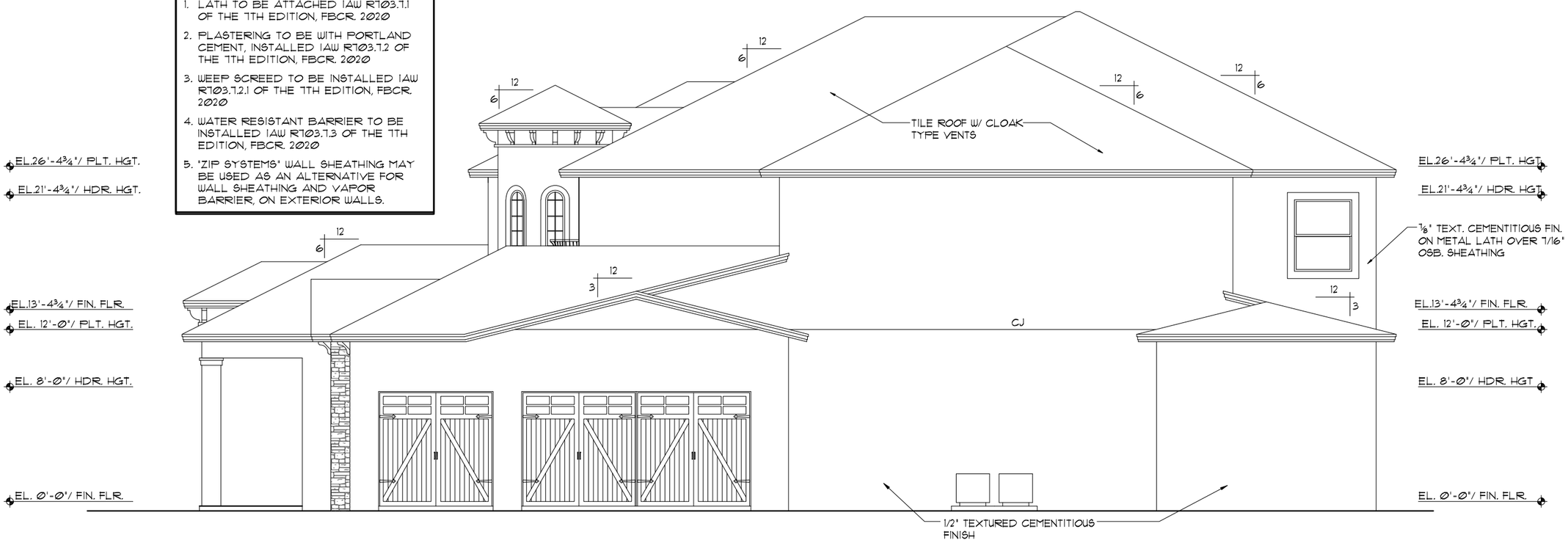

RIGHT ELEVATION "C"

1/8"=1'-0" (11X17) 1/4"=1'-0" (22X34)

THIS STRUCTURE IS DESIGNED TO WITHSTAND 150 MPH WINDS PER THE 7th EDITION, 2020 OF THE FLORIDA BUILDING CODE RESIDENTIAL AND IS CERTIFIED AS SUCH

LOT SPECIFIC INFORMATION

© COPYRIGHT 2012
Park Square Homes hereby reserves its common law copyrights and other copyrights in these plans, ideas, and design. These plans, ideas and designs are not to be copied or changed in any manner or form whatsoever, nor are they to be assigned to any third party without first obtaining the express written permission from Park Square Homes.

SIGNATURE SERIES

REVISIONS	BY
05-29-20	RDC

Engineering By:
DBE and C
MICHAEL A. THOMPSON
PE 47509
PHONE 407-721-2292

A DIVISION OF PARK SQUARE ENTERPRISES, INC.
5200 Vineland Road, Suite 200
Orlando, Florida 32811
Phone: (407) 529 - 3000

Park Square HOMES

EXTERIOR ELEVATION "C"
LEFT AND RIGHT

5803T-SIDE LOAD

THE CARRARA II

DATE	09-01-14
SCALE	AS NOTED
DRAWN	RDC
JOB	N/A
SHEET	07C.1
OF	SHEETS

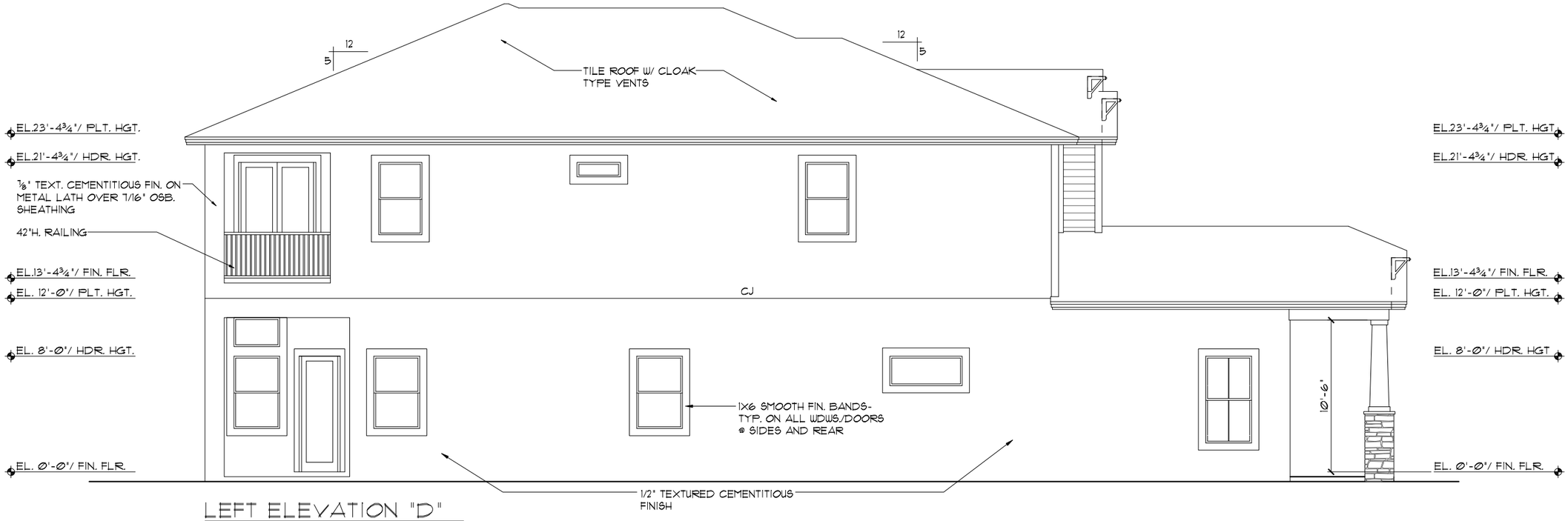

LEFT ELEVATION "D"

1/8"=1'-0" (11X17) 1/4"=1'-0" (22X34)

EXTERIOR FINISH NOTES

1. LATH TO BE ATTACHED IAW R703.7.1 OF THE 7TH EDITION, FBCR. 2020
2. PLASTERING TO BE WITH PORTLAND CEMENT, INSTALLED IAW R703.7.2 OF THE 7TH EDITION, FBCR. 2020
3. WEEP SCREED TO BE INSTALLED IAW R703.7.2.1 OF THE 7TH EDITION, FBCR. 2020
4. WATER RESISTANT BARRIER TO BE INSTALLED IAW R703.7.3 OF THE 7TH EDITION, FBCR. 2020
5. "ZIP SYSTEMS" WALL SHEATHING MAY BE USED AS AN ALTERNATIVE FOR WALL SHEATHING AND VAPOR BARRIER, ON EXTERIOR WALLS.

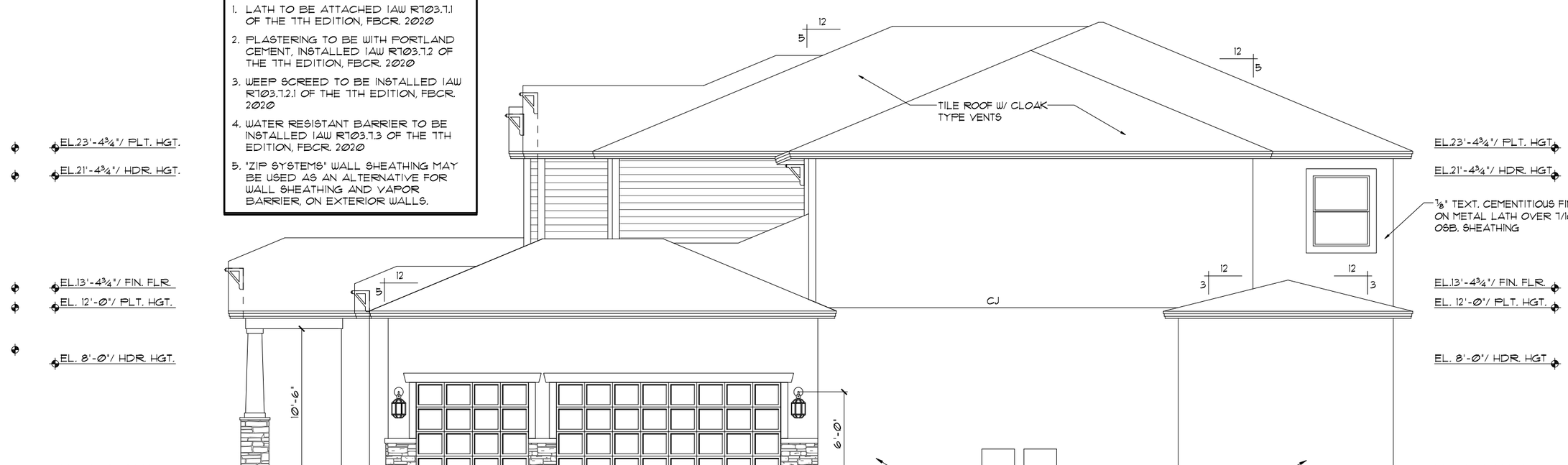

RIGHT ELEVATION "D"

1/8"=1'-0" (11X17) 1/4"=1'-0" (22X34)

THIS STRUCTURE IS DESIGNED TO WITHSTAND 150 MPH WINDS PER THE 7th EDITION, 2020 OF THE FLORIDA BUILDING CODE RESIDENTIAL AND IS CERTIFIED AS SUCH

LOT SPECIFIC INFORMATION

© COPYRIGHT 2012
Park Square Homes hereby reserves its common law copyrights and other copyrights in these plans, ideas, and design. These plans, ideas and designs are not to be copied or changed in any manner or form whatsoever, nor are they to be assigned to any third party without first obtaining the express written permission from Park Square Homes.

SIGNATURE SERIES

REVISIONS	BY
05-29-20	RDC

Engineering By:
DBE and C
MICHAEL A. THOMPSON
PE 47509
PHONE 407-721-2292

A DIVISION OF PARK SQUARE ENTERPRISES, INC.
5200 Vineland Road, Suite 200
Orlando, Florida 32811
Phone: (407) 529 - 3000

Park Square HOMES

EXTERIOR ELEVATION "D"
LEFT AND RIGHT

5803T-SIDE LOAD

THE CARRARA II

DATE	09-01-14
SCALE	AS NOTED
DRAWN	RDC
JOB	N/A
SHEET	07D.1
OF	SHEETS

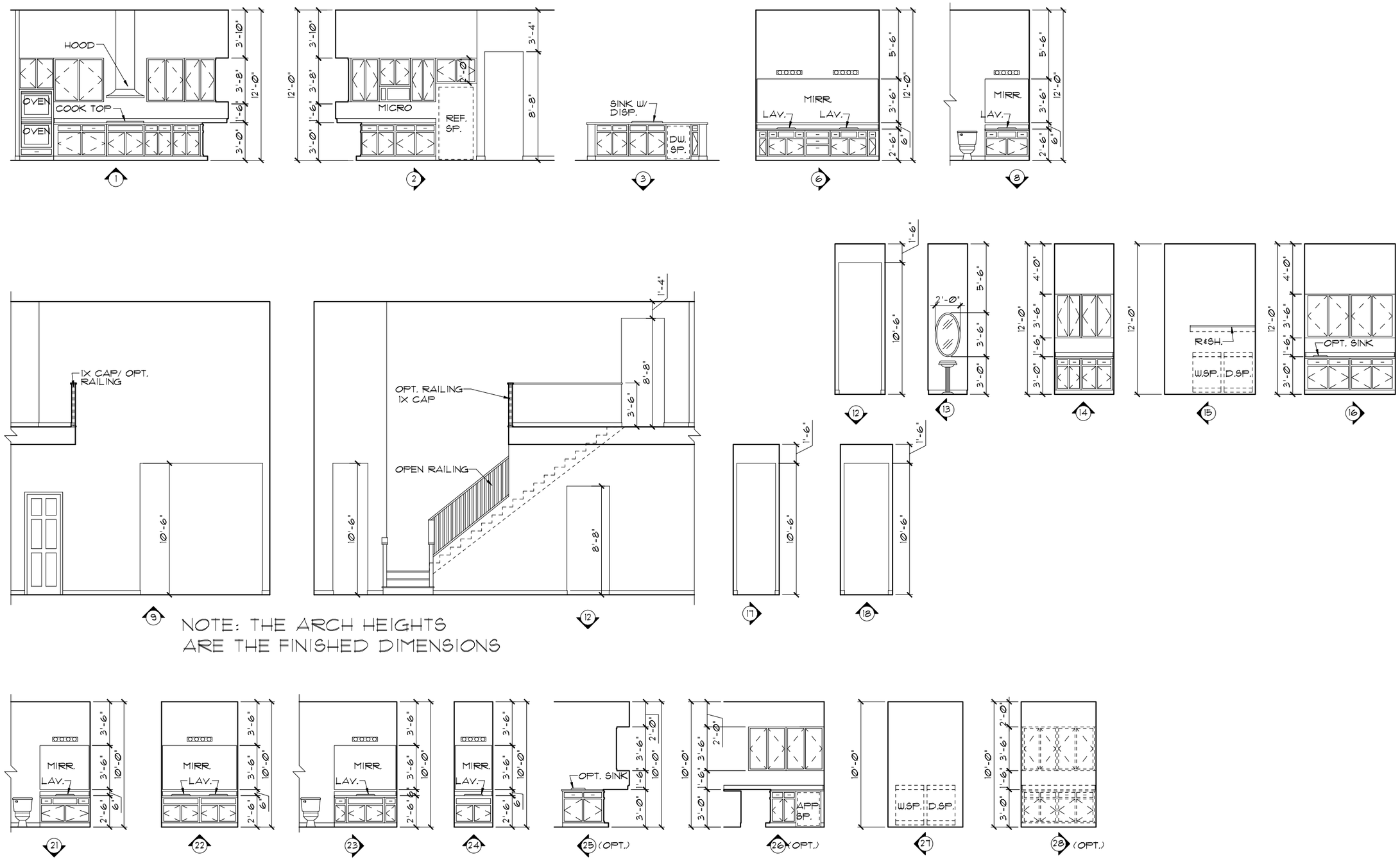

THIS STRUCTURE IS DESIGNED TO WITHSTAND 150 MPH WINDS PER THE 7th EDITION, 2020 OF THE FLORIDA BUILDING CODE RESIDENTIAL AND IS CERTIFIED AS SUCH

LOT SPECIFIC INFORMATION

© COPYRIGHT 2012 Park Square Homes hereby reserves its common law copyrights and other copyrights in these plans, ideas, and design. These plans, ideas, and designs are not to be copied or changed in any manner or form whatsoever, nor are they to be assigned to any third party without first obtaining the express written permission from Park Square Homes.

SIGNATURE SERIES

REVISIONS	BY
05-29-20	RDC

Engineering By:
DBE and C
MICHAEL A. THOMPSON
PE 47509
PHONE 407-721-2292

A DIVISION OF PARK SQUARE ENTERPRISES, INC.
5200 Vineland Road, Suite 200
Orlando, Florida 32811
Phone: (407) 529 - 3000

Park Square HOMES

INTERIOR ELEVATIONS

5803T-SIDE LOAD

THE CARRARA II

DATE	09-01-14
SCALE	AS NOTED
DRAWN	RDC
JOB	N/A
SHEET	08.0
OF	SHEETS

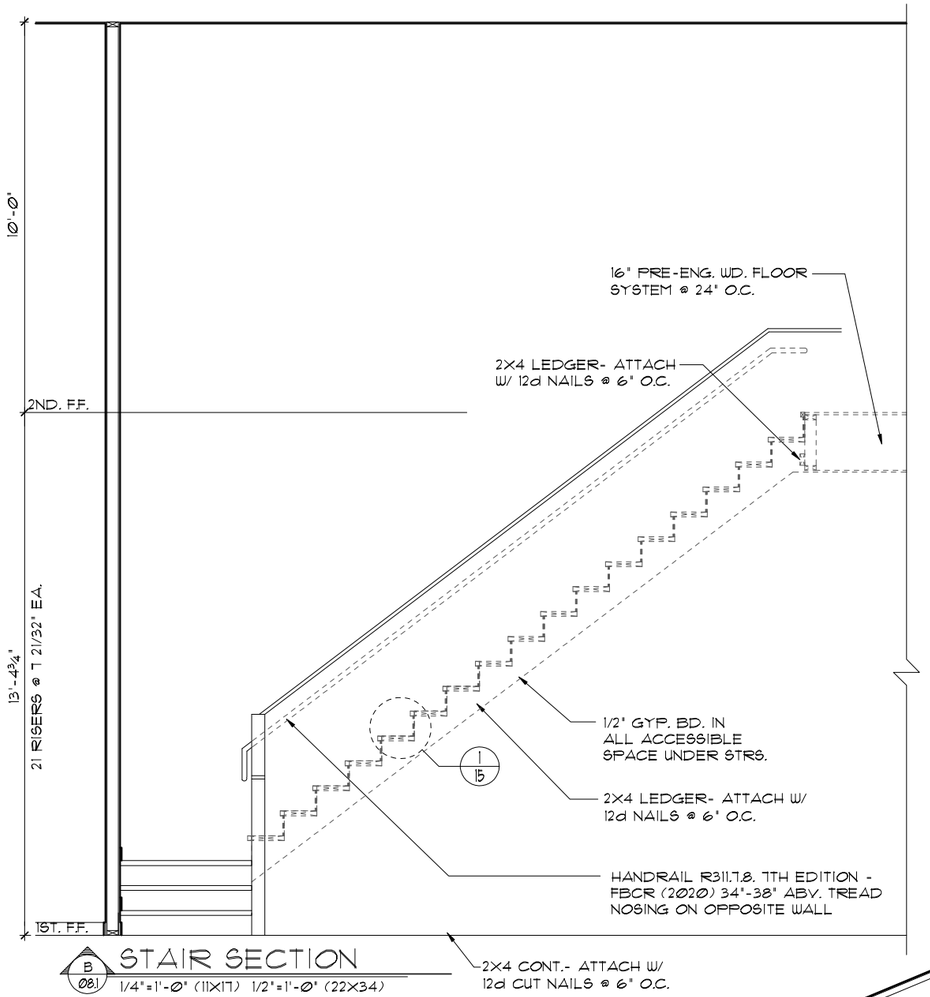

B 08.1 STAIR SECTION
1/4"=1'-0" (11X17) 1/2"=1'-0" (22X34)

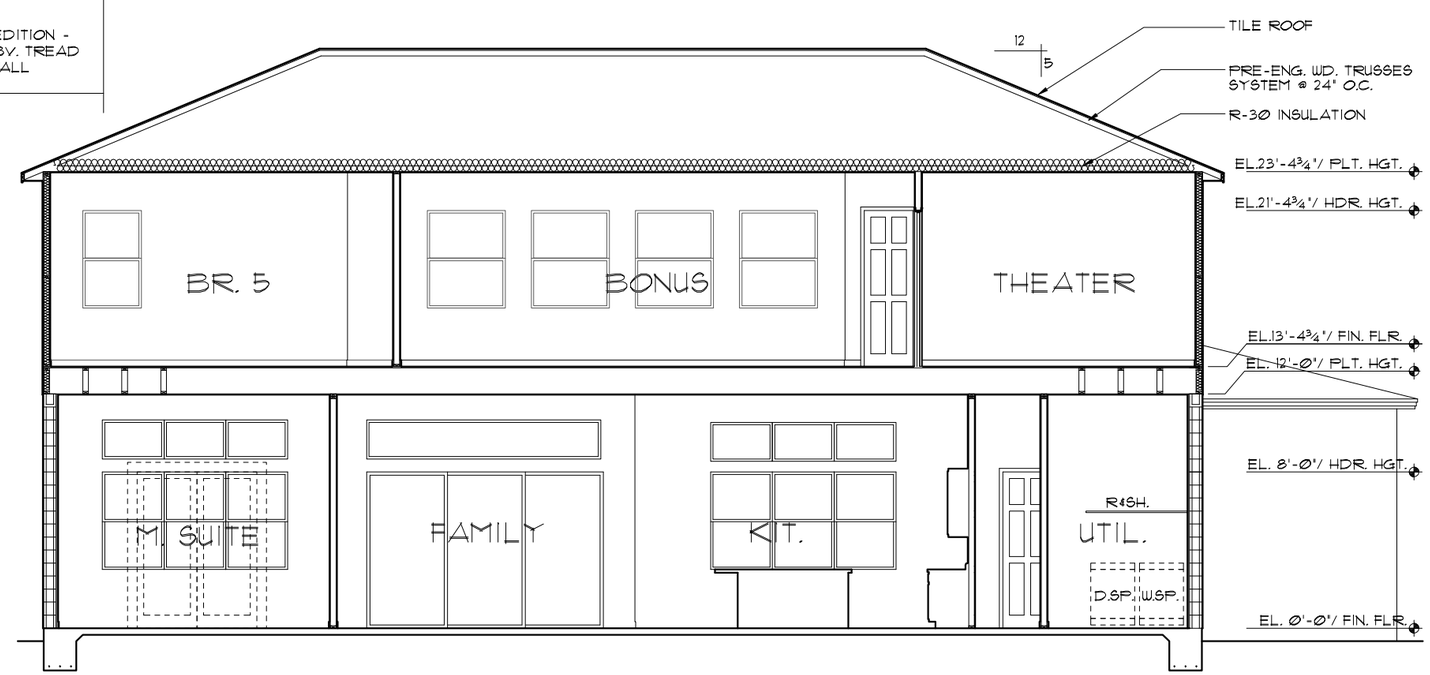

A 08.1 CROSS SECTION
1/8"=1'-0" (11X17) 1/4"=1'-0" (22X34)

SCALE: 1/4" = 1'-0"
0 4 8 12 16

THIS STRUCTURE IS DESIGNED TO WITHSTAND 150 MPH WINDS PER THE 7th EDITION, 2020 OF THE FLORIDA BUILDING CODE RESIDENTIAL AND IS CERTIFIED AS SUCH

LOT SPECIFIC INFORMATION

© COPYRIGHT 2012
Park Square Homes hereby reserves its common law copyrights and other copyrights in these plans, ideas, and design. These plans, ideas and designs are not to be copied or changed in any manner or form whatsoever, nor are they to be assigned to any third party without first obtaining the express written permission from Park Square Homes.

SIGNATURE SERIES

REVISIONS	BY
05-29-20	RDC

Engineering By:
DBE and C
MICHAEL A. THOMPSON
PE 47509
PHONE 407-721-2292

Park Square HOMES
A DIVISION OF PARK SQUARE ENTERPRISES, INC.
5200 Vineland Road, Suite 200
Orlando, Florida 32811
Phone: (407) 529 - 3000

STAIR SECTION/ CROSS SECTION

5803T-SIDE LOAD

THE CARRARA II

DATE	09-01-14
SCALE	AS NOTED
DRAWN	RDC
JOB	N/A
SHEET	08.1
OF	SHEETS

MECHANICAL/GENERAL NOTES

PER 7TH ED. 2020 FLA BLD. CODE-RESIDENTIAL

1.) COMPLETE DUCT DESIGN W/ SIZES & R-VALUE COMPLYING W/ THE FLORIDA ENERGY EFFICIENCY CODE FOR BUILDING CONSTRUCTION 610.1 ABC.1

2.) SUFFICIENT SPACE SHALL BE PROVIDED ADJACENT TO THE MECHANICAL COMPONENTS TO ASSURE ADEQUATE ACCESS FOR:
A) CONSTRUCTION AND SEALING, AND
B) SECTION M1601 PER THE FBCR 2020 7TH ED.

3.) AIR CONDITIONING SYSTEM SHALL BE COMPLETELY BALANCED. ALL ROOMS ISOLATED FROM THE RETURN AIR SHALL BE PROVIDED WITH MEANS TO COMPLY WITH SECTION M1602 OF THE FBCR CODE 2017 6TH EDITION.

4.) IAW NEC 2020- 210.12-ALL 15A OR 20A, 120V BRANCH CIRCUITS THAT SUPPLY OUTLETS IN DWELLING UNITS- FAMILY RMS, DINING RMS, LIVING RMS, PARLORS, LIBRARIES, BEDROOMS DENS, CLOSETS, SUNROOMS, RECREATION RMS, HALLWAYS OR SIMILAR AREAS SHALL BE PROTECTED BY A LISTED AFCI DEVICE OF THE COMBINATION TYPE.

5.) IAW NEC 2020- 406.11, ALL 15A AND 20A, 125V RECEPTACLES SHALL BE LISTED AS TAMPER RESISTANT.

6.) SMOKE ALARMS SHALL BE IN ALL SLEEPING AREAS, SHALL BE INTERCONNECTED, SHALL BE WITHIN 1' TO 3' OF PEAK & SHALL BE 3' FROM THE SUPPLY OR RETURN AIR- STREAM & EQUIPPED W/ A BATTERY BACKUP. ALARMS MAY NOT BE CONNECTED WHERE ALARMS ARE WIRELESS & ALL ALARMS SOUND UPON ACTIVATION IAW FBCR R314.3 & R314.4. MODEL# TO BE USED ON THIS JOB TO BE:
BRK: SMOKE-9120B, C/O- SC9120B
KIDDE: SMOKE-21007581, C/O 21006377-N

7.) ALL WATER HEATERS HAVING AN IGNITION SOURCE TO BE ELEVATED SUCH THAT THE SOURCE OF IGNITION IS MINIMUM 18" ABOVE GARAGE FLOOR UNLESS WATER HEATER IS LISTED AS FLAMMABLE VAPOR IGNITION RESISTANT. IAW FBCR 2020, 7TH ED. P2801.7

8.) ALL EQUIPMENT & APPLIANCES, INCLUDING WATER HEATERS HAVING AN IGNITION SOURCE TO BE ELEVATED SUCH THAT THE SOURCE OF IGNITION IS MINIMUM 18" ABOVE GARAGE FLOOR UNLESS IT IS LISTED AS FLAMMABLE VAPOR IGNITION RESISTANT. IAW FBCR 2020, 7TH ED.

9.) THE TOTAL LENGTH OF VENTING FOR DRYER TO BE: **5'-0" MAXIMUM**-THE EXHAUST DUCT SHALL TERMINATE NOT LESS THAN 3 FEET (914MM) IN ANY DIRECTION FROM OPENINGS INTO BUILDINGS. PER FBCR 2020, 7TH ED. M1502.3

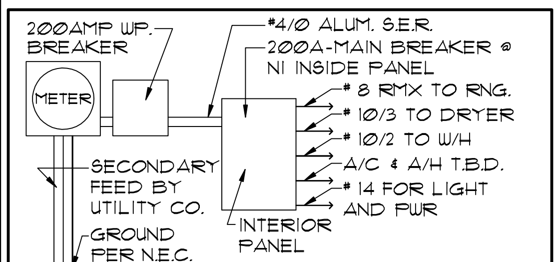

ELECTRICAL RISER DIAGRAM
N.T.S.

NOTE:
ELECTRICAL MATERIALS AND INSTALLATIONS SHALL COMPLY W/ APPLICABLE PROVISIONS OF THE NATIONAL ELEC. CODE 250.52(A)(1) TO (6), LOCAL CODES & LOCAL POWER COMPANY

ELECTRICAL LEGEND

SINGLE POLE SWITCH	OUTLET, TV/CABLE
THREE WAY SWITCH	OUTLET, PHONE
OUTLET 110-115	INTERCOM
OUT. 110-115, SPLIT WIRED	CHIMES
OUT. 110-115, W/ USB	SMOKE DETECTOR
OUT. 110-115, CLG. MOUNT.	CARBON MONOXIDE
OUT. 110-115, FLR. MOUNT.	PUSH BUTTON
SPCL. PURPOSE 220-240	EXHAUST FAN
LIGHT FIXT., CLG. MTD.	EX. FAN/LIGHT COMBO
LIGHT FIXT., WALL MTD.	DISPOSAL
LIGHT FIXT., RECESSED	ELECTRICAL PANEL
LIGHT FIXT., REC. ADJUST.	CEILING FAN, PREWIRE
LIGHT FIXT., PULL CHAIN	CEILING FAN, INSTALL
LIGHT FIXT.,FLUORESCENT	ELECT. JUNCTION BOX
LIGHT FIXT., EXT. FLOODS	THERMOSTAT
LIGHT FIXT., EMERG. EXIT	DISCONNECT SWITCH
LIGHT FIXT., EXIT/BACKUP	ELEC. POWER METER

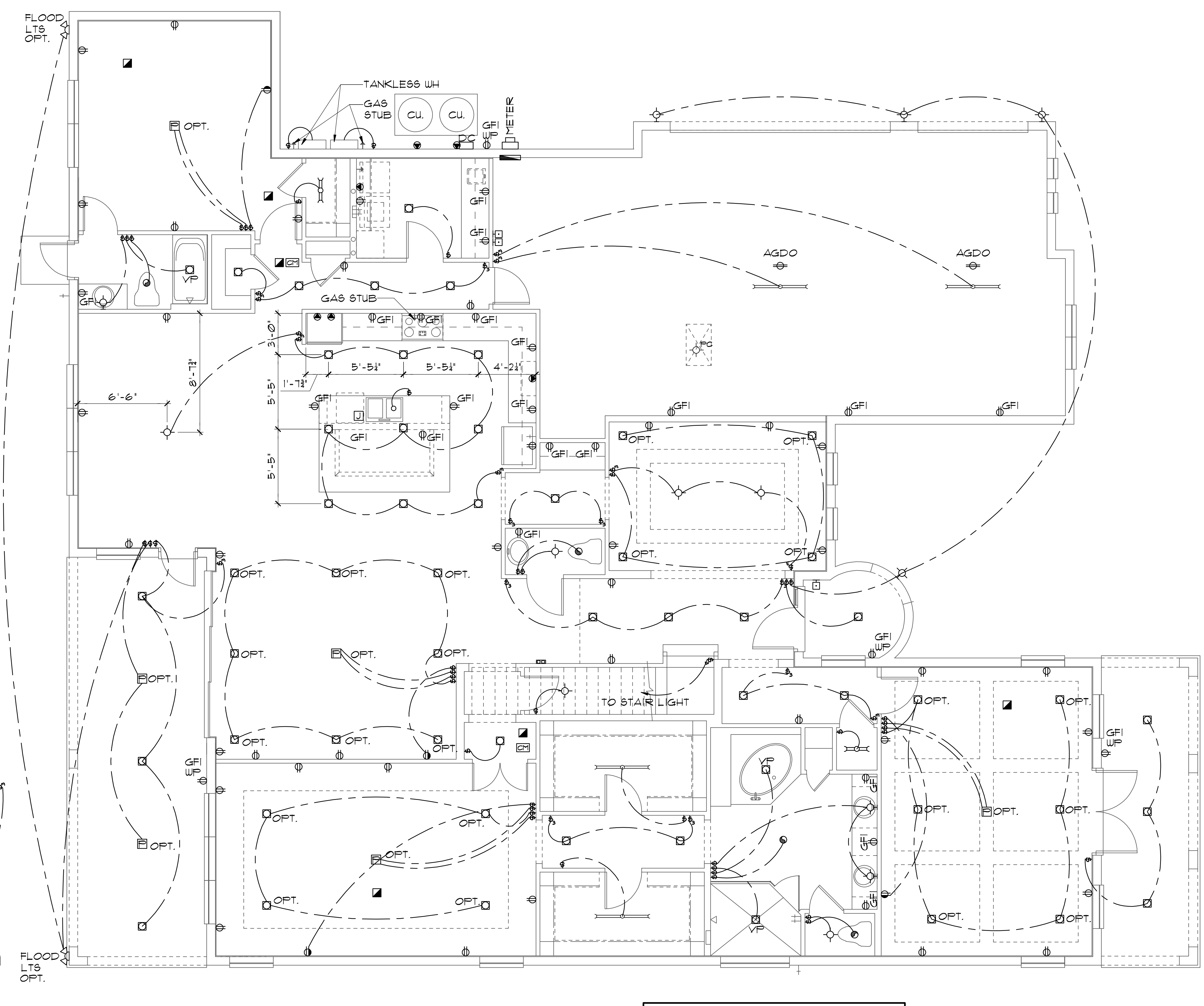

ELECTRICAL PLAN

1/8"=1'-0" (11X17) 1/4"=1'-0" (22X34)

NOTE: SEE FINAL COLOR SHEET FOR TV, FANS & PHONE LOCATIONS

SCALE: 1/4" = 1'-0"
0 4 8 12 16

THIS STRUCTURE IS DESIGNED TO WITHSTAND 150 MPH WINDS PER THE 7th EDITION 2020 OF THE FLORIDA BUILDING CODE RESIDENTIAL AND IS CERTIFIED AS SUCH

LOT SPECIFIC INFORMATION

SIGNATURE SERIES

© COPYRIGHT 2012 Park Square Homes hereby reserves its common law copyrights and other copyrights in these plans, ideas, and design. These plans, ideas and designs are not to be copied or changed in any manner or form whatsoever nor are they to be assigned to any third party without first obtaining the express written permission from Park Square Homes.

5803T-SIDE LOAD

THE CARRARA II

FIRST FLOOR ELECTRICAL PLAN

Park Square HOMES

A DIVISION OF PARK SQUARE ENTERPRISES, INC.
5200 Vineland Road, Suite 200
Orlando, Florida 32811
Phone: (407) 529 - 3000

Engineering By:
DBE and C
MICHAEL A. THOMPSON
PE 47509
PHONE 407-721-2292

REVISIONS	BY
05-29-20	RDC

DATE	09-01-14
SCALE	AS NOTED
DRAWN	RDC
JOB	N/A
SHEET	09A.1
OF	SHEETS

MECHANICAL/GENERAL NOTES

PER 7TH ED. 2020 FLA BLD. CODE-RESIDENTIAL

1.) COMPLETE DUCT DESIGN W/ SIZES & R-VALUE COMPLYING W/ THE FLORIDA ENERGY EFFICIENCY CODE FOR BUILDING CONSTRUCTION 610.1 ABC.1

2.) SUFFICIENT SPACE SHALL BE PROVIDED ADJACENT TO THE MECHANICAL COMPONENTS TO ASSURE ADEQUATE ACCESS FOR:
A.) CONSTRUCTION AND SEALING, AND
B.) SECTION M1601 PER THE FBCR 2020 7TH ED.

3.) AIR CONDITIONING SYSTEM SHALL BE COMPLETELY BALANCED. ALL ROOMS ISOLATED FROM THE RETURN AIR SHALL BE PROVIDED WITH MEANS TO COMPLY WITH SECTION M1602 OF THE FBCR CODE 2017 6TH EDITION.

4.) IAW NEC 2020- 210.12-ALL 15A OR 20A, 120V BRANCH CIRCUITS THAT SUPPLY OUTLETS IN DWELLING UNITS- FAMILY RMS, DINING RMS, LIVING RMS, PARLORS, LIBRARIES, BEDROOMS DENS, CLOSETS, SUNROOMS, RECREATION RMS, HALLWAYS OR SIMILAR AREAS SHALL BE PROTECTED BY A LISTED AFCI DEVICE OF THE COMBINATION TYPE.

5.) IAW NEC 2020- 406.11, ALL 15A AND 20A, 125V RECEPTACLES SHALL BE LISTED AS TAMPER RESISTANT.

6.) SMOKE ALARMS SHALL BE IN ALL SLEEPING AREAS, SHALL BE INTERCONNECTED, SHALL BE WITHIN 1' TO 3' OF PEAK & SHALL BE 3' FROM THE SUPPLY OR RETURN AIR- STREAM & EQUIPPED W/ A BATTERY BACKUP. ALARMS MAY NOT BE CONNECTED WHERE ALARMS ARE WIRELESS & ALL ALARMS SOUND UPON ACTIVATION IAW FBCR R314.3 & R314.4. MODEL# TO BE USED ON THIS JOB TO BE:
BRK: SMOKE-9120B, C/O- SC9120B
KIDDE: SMOKE-21007581, C/O 21006377-N

7.) ALL WATER HEATERS HAVING AN IGNITION SOURCE TO BE ELEVATED SUCH THAT THE SOURCE OF IGNITION IS MINIMUM 18" ABOVE GARAGE FLOOR UNLESS WATER HEATER IS LISTED AS FLAMMABLE VAPOR IGNITION RESISTANT. IAW FBCR 2020, 7TH ED. P2801.7

8.) ALL EQUIPMENT & APPLIANCES, INCLUDING WATER HEATERS HAVING AN IGNITION SOURCE TO BE ELEVATED SUCH THAT THE SOURCE OF IGNITION IS MINIMUM 18" ABOVE GARAGE FLOOR UNLESS IT IS LISTED AS FLAMMABLE VAPOR IGNITION RESISTANT. IAW FBCR 2020, 7TH ED.

9.) THE TOTAL LENGTH OF VENTING FOR DRYER TO BE: **5'-0" MAXIMUM**-THE EXHAUST DUCT SHALL TERMINATE NOT LESS THAN 3 FEET (914MM) IN ANY DIRECTION FROM OPENINGS INTO BUILDINGS. PER FBCR 2020, 7TH ED. M1502.3

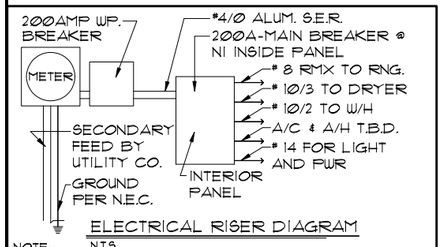

ELECTRICAL RISER DIAGRAM
N.T.S.

NOTE:
ELECTRICAL MATERIALS AND INSTALLATIONS SHALL COMPLY W/ APPLICABLE PROVISIONS OF THE NATIONAL ELEC. CODE 250.52(A)(1) TO (6), LOCAL CODES & LOCAL POWER COMPANY

ELECTRICAL LEGEND

	SINGLE POLE SWITCH		OUTLET, TV/CABLE
	THREE WAY SWITCH		OUTLET, PHONE
	OUTLET 110-115		INTERCOM
	OUT. 110-115, SPLIT WIRED		CHIMES
	OUT. 110-115, W/ USB		SMOKE DETECTOR
	OUT. 110-115, CLG. MOUNT.	CM	CARBON MONOXIDE
	OUT. 110-115, FLR. MOUNT.		PUSH BUTTON
	SPCL. PURPOSE 220-240		EXHAUST FAN
	LIGHT FIXT., CLG. MTD.		EX. FAN/LIGHT COMBO
	LIGHT FIXT., WALL MTD.		DISPOSAL
	LIGHT FIXT., RECESSED		ELECTRICAL PANEL
E	LIGHT FIXT., REC. ADJUST.	F	CEILING FAN, PREWIRE
PC	LIGHT FIXT., PULL CHAIN	F	CEILING FAN, INSTALL
	LIGHT FIXT.,FLUORESCENT	J	ELECT. JUNCTION BOX
	LIGHT FIXT., EXT. FLOODS	T	THERMOSTAT
EXIT	LIGHT FIXT., EMERG. EXIT	DC	DISCONNECT SWITCH
	LIGHT FIXT., EXIT/BACKUP		ELEC. POWER METER

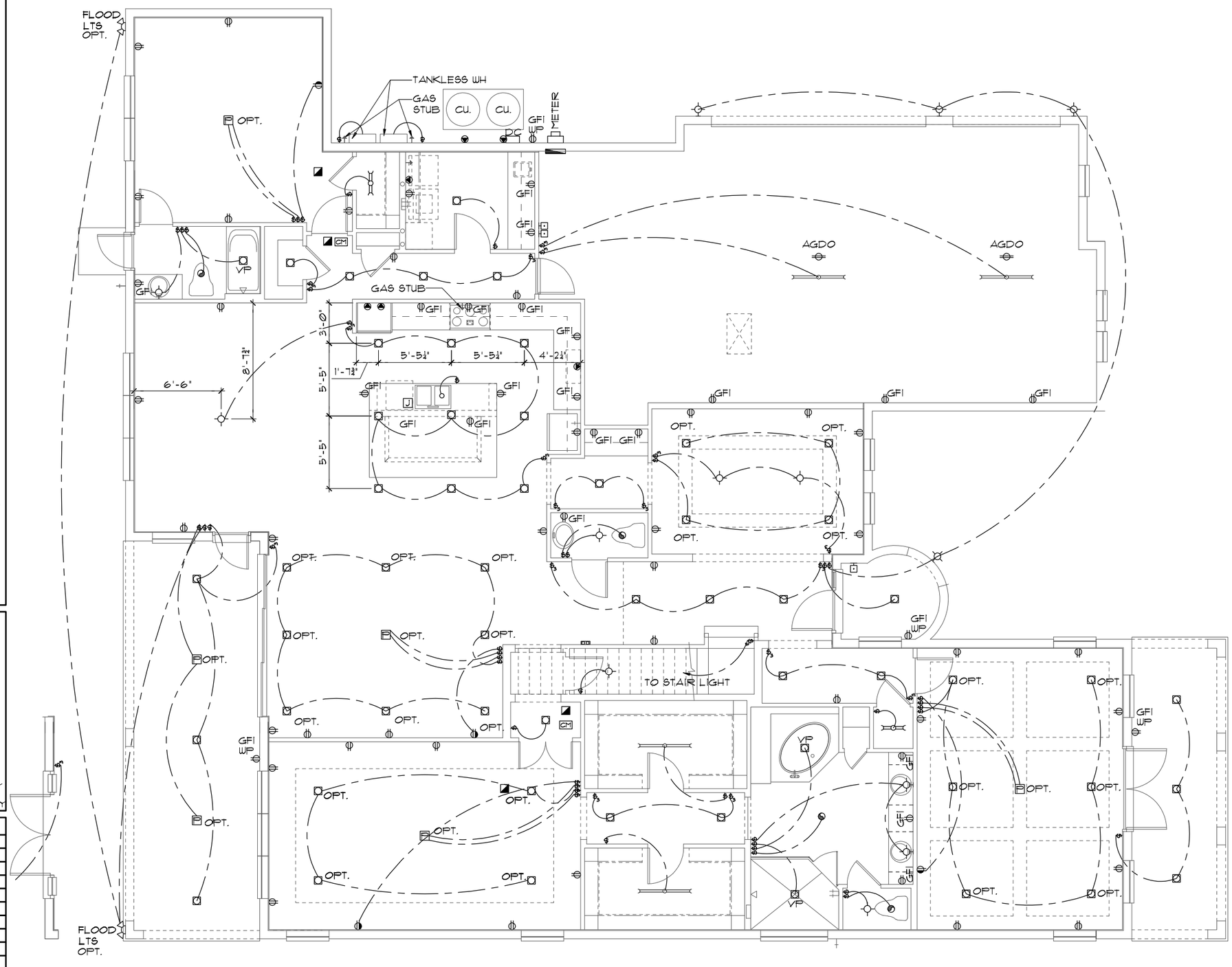

ELECTRICAL PLAN

1/8"=1'-0" (11X17) 1/4"=1'-0" (22X34)

NOTE: SEE FINAL COLOR SHEET FOR TV, FANS & PHONE LOCATIONS

SCALE: 1/4" = 1'-0"
0 4 8 12 16

THIS STRUCTURE IS DESIGNED TO WITHSTAND 150 MPH WINDS PER THE 7th EDITION, 2020 OF THE FLORIDA BUILDING CODE RESIDENTIAL AND IS CERTIFIED AS SUCH

LOT SPECIFIC INFORMATION

SIGNATURE SERIES

© COPYRIGHT 2012
Park Square Homes hereby reserves its common law copyrights and other copyrights in these plans, ideas, and design. These plans, ideas and designs are not to be copied or changed in any manner or form whatsoever, nor are they to be assigned to any third party without first obtaining the express written permission from Park Square Homes.

REVISIONS	BY
05-29-20	RDC

Engineering By:
DBE and C
MICHAEL A. THOMPSON
PE 47509
PHONE 407-721-2292

A DIVISION OF PARK SQUARE ENTERPRISES, INC.
5200 Vineland Road, Suite 200
Orlando, Florida 32811
Phone: (407) 529 - 3000

Park Square HOMES

FIRST FLOOR ELECTRICAL PLAN

5803T-SIDE LOAD

THE CARRARA II

DATE	09-01-14
SCALE	AS NOTED
DRAWN	RDC
JOB	N/A
SHEET	09C.1
OF	SHEETS

MECHANICAL/GENERAL NOTES

PER 7TH ED. 2020 FLA BLD. CODE-RESIDENTIAL

1.) COMPLETE DUCT DESIGN W/ SIZES & R-VALUE COMPLYING W/ THE FLORIDA ENERGY EFFICIENCY CODE FOR BUILDING CONSTRUCTION 610.1 ABC.1

2.) SUFFICIENT SPACE SHALL BE PROVIDED ADJACENT TO THE MECHANICAL COMPONENTS TO ASSURE ADEQUATE ACCESS FOR:
A.) CONSTRUCTION AND SEALING, AND
B.) SECTION M1601 PER THE FBCR 2020 7TH ED.

3.) AIR CONDITIONING SYSTEM SHALL BE COMPLETELY BALANCED. ALL ROOMS ISOLATED FROM THE RETURN AIR SHALL BE PROVIDED WITH MEANS TO COMPLY WITH SECTION M1602 OF THE FBCR CODE 2017 6TH EDITION.

4.) IAW NEC 2020- 210.12-ALL 15A OR 20A, 120V BRANCH CIRCUITS THAT SUPPLY OUTLETS IN DWELLING UNITS- FAMILY RMS, DINING RMS, LIVING RMS, PARLORS, LIBRARIES, BEDROOMS DENS, CLOSETS, SUNROOMS, RECREATION RMS, HALLWAYS OR SIMILAR AREAS SHALL BE PROTECTED BY A LISTED AFCI DEVICE OF THE COMBINATION TYPE.

5.) IAW NEC 2020- 406.11, ALL 15A AND 20A, 125V RECEPTACLES SHALL BE LISTED AS TAMPER RESISTANT.

6.) SMOKE ALARMS SHALL BE IN ALL SLEEPING AREAS, SHALL BE INTERCONNECTED, SHALL BE WITHIN 1' TO 3' OF PEAK & SHALL BE 3' FROM THE SUPPLY OR RETURN AIR- STREAM & EQUIPPED W/ A BATTERY BACKUP. ALARMS MAY NOT BE CONNECTED WHERE ALARMS ARE WIRELESS & ALL ALARMS SOUND UPON ACTIVATION IAW FBCR R314.3 & R314.4. MODEL# TO BE USED ON THIS JOB TO BE:
BRK: SMOKE-9120B, C/O- SC9120B
KIDDE: SMOKE-21007581, C/O 21006377-N

7.) ALL WATER HEATERS HAVING AN IGNITION SOURCE TO BE ELEVATED SUCH THAT THE SOURCE OF IGNITION IS MINIMUM 18" ABOVE GARAGE FLOOR UNLESS WATER HEATER IS LISTED AS FLAMMABLE VAPOR IGNITION RESISTANT. IAW FBCR 2020, 7TH ED. P2801.7

8.) ALL EQUIPMENT & APPLIANCES, INCLUDING WATER HEATERS HAVING AN IGNITION SOURCE TO BE ELEVATED SUCH THAT THE SOURCE OF IGNITION IS MINIMUM 18" ABOVE GARAGE FLOOR UNLESS IT IS LISTED AS FLAMMABLE VAPOR IGNITION RESISTANT. IAW FBCR 2020, 7TH ED.

9.) THE TOTAL LENGTH OF VENTING FOR DRYER TO BE: **5'-0" MAXIMUM**-THE EXHAUST DUCT SHALL TERMINATE NOT LESS THAN 3 FEET (914MM) IN ANY DIRECTION FROM OPENINGS INTO BUILDINGS. PER FBCR 2020, 7TH ED. M1502.3

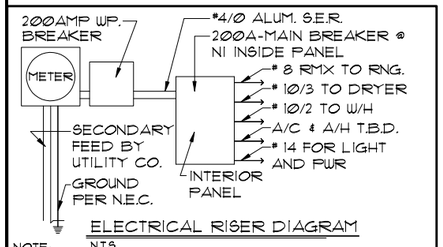

ELECTRICAL RISER DIAGRAM
N.T.S.

NOTE:
ELECTRICAL MATERIALS AND INSTALLATIONS SHALL COMPLY W/ APPLICABLE PROVISIONS OF THE NATIONAL ELEC. CODE 250.52(A)(1) TO (6), LOCAL CODES & LOCAL POWER COMPANY

ELECTRICAL LEGEND

	SINGLE POLE SWITCH		OUTLET, TV/CABLE
	THREE WAY SWITCH		OUTLET, PHONE
	OUTLET 110-115		INTERCOM
	OUT. 110-115, SPLIT WIRED		CHIMES
	OUT. 110-115, W/ USB		SMOKE DETECTOR
	OUT. 110-115, CLG. MOUNT.	CM	CARBON MONOXIDE
	OUT. 110-115, FLR. MOUNT.		PUSH BUTTON
	SPCL. PURPOSE 220-240		EXHAUST FAN
	LIGHT FIXT., CLG. MTD.		EX. FAN/LIGHT COMBO
	LIGHT FIXT., WALL MTD.		DISPOSAL
	LIGHT FIXT., RECESSED		ELECTRICAL PANEL
E	LIGHT FIXT., REC. ADJUST.	F	CEILING FAN, PREWIRE
PC	LIGHT FIXT., PULL CHAIN	F	CEILING FAN, INSTALL
	LIGHT FIXT.,FLUORESCENT	J	ELECT. JUNCTION BOX
	LIGHT FIXT., EXT. FLOODS	T	THERMOSTAT
EXIT	LIGHT FIXT., EMERG. EXIT	DC	DISCONNECT SWITCH
	LIGHT FIXT., EXIT/BACKUP		ELEC. POWER METER

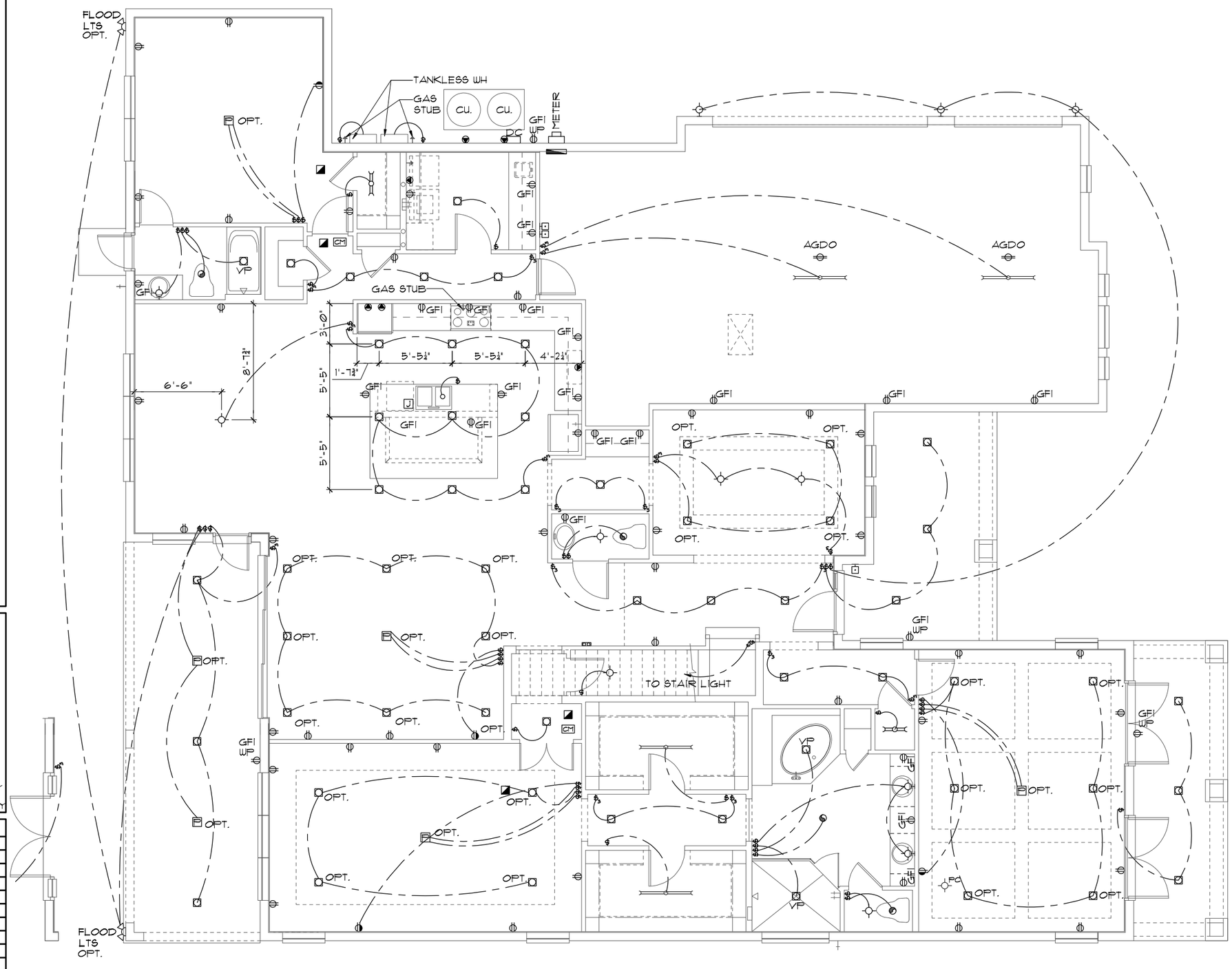

ELECTRICAL PLAN

1/8"=1'-0" (11X17) 1/4"=1'-0" (22X34)

NOTE: SEE FINAL COLOR SHEET FOR TV, FANS & PHONE LOCATIONS

SCALE: 1/4" = 1'-0"
0 4 8 12 16

THIS STRUCTURE IS DESIGNED TO WITHSTAND 150 MPH WINDS PER THE 7th EDITION, 2020 OF THE FLORIDA BUILDING CODE RESIDENTIAL AND IS CERTIFIED AS SUCH

LOT SPECIFIC INFORMATION

© COPYRIGHT 2012
Park Square Homes hereby reserves its common law copyrights and other copyrights in these plans, ideas, and design. These plans, ideas and designs are not to be copied or changed in any manner or form whatsoever, nor are they to be assigned to any third party without first obtaining the express written permission from Park Square Homes.

SIGNATURE SERIES

REVISIONS	BY
05-29-20	RDC

Engineering By:
DBE and C
MICHAEL A. THOMPSON
PE 47509
PHONE 407-721-2292

A DIVISION OF PARK SQUARE ENTERPRISES, INC.
5200 Vineland Road, Suite 200
Orlando, Florida 32811
Phone: (407) 529 - 3000

Park Square HOMES

FIRST FLOOR ELECTRICAL PLAN

5803T-SIDE LOAD
THE CARRARA II

DATE	09-01-14
SCALE	AS NOTED
DRAWN	RDC
JOB	N/A
SHEET	09D.1
OF	SHEETS

MECHANICAL/GENERAL NOTES

PER 7TH ED. 2020 FLA BLD. CODE-RESIDENTIAL

1.) COMPLETE DUCT DESIGN W/ SIZES & R-VALUE COMPLYING W/ THE FLORIDA ENERGY EFFICIENCY CODE FOR BUILDING CONSTRUCTION 610.1 ABC.1

2.) SUFFICIENT SPACE SHALL BE PROVIDED ADJACENT TO THE MECHANICAL COMPONENTS TO ASSURE ADEQUATE ACCESS FOR:
A.) CONSTRUCTION AND SEALING, AND
B.) SECTION M1601 PER THE FBCR 2020 7TH ED.

3.) AIR CONDITIONING SYSTEM SHALL BE COMPLETELY BALANCED. ALL ROOMS ISOLATED FROM THE RETURN AIR SHALL BE PROVIDED WITH MEANS TO COMPLY WITH SECTION M1602 OF THE FBCR CODE 2017 6TH EDITION.

4.) IAW NEC 2020- 210.12-ALL 15A OR 20A, 120V BRANCH CIRCUITS THAT SUPPLY OUTLETS IN DWELLING UNITS- FAMILY RMS, DINING RMS, LIVING RMS, PARLORS, LIBRARIES, BEDROOMS DENS, CLOSETS, SUNROOMS, RECREATION RMS, HALLWAYS OR SIMILAR AREAS SHALL BE PROTECTED BY A LISTED AFCI DEVICE OF THE COMBINATION TYPE.

5.) IAW NEC 2020- 406.11, ALL 15A AND 20A, 125V RECEPTACLES SHALL BE LISTED AS TAMPER RESISTANT.

6.) SMOKE ALARMS SHALL BE IN ALL SLEEPING AREAS, SHALL BE INTERCONNECTED, SHALL BE WITHIN 1' TO 3' OF PEAK & SHALL BE 3' FROM THE SUPPLY OR RETURN AIR- STREAM & EQUIPPED W/ A BATTERY BACKUP. ALARMS MAY NOT BE CONNECTED WHERE ALARMS ARE WIRELESS & ALL ALARMS SOUND UPON ACTIVATION IAW FBCR R314.3 & R314.4. MODEL# TO BE USED ON THIS JOB TO BE:
BRK: SMOKE-9120B, C/O- SC9120B
KIDDE: SMOKE-21007581, C/O 21006377-N

7.) ALL WATER HEATERS HAVING AN IGNITION SOURCE TO BE ELEVATED SUCH THAT THE SOURCE OF IGNITION IS MINIMUM 18" ABOVE GARAGE FLOOR UNLESS WATER HEATER IS LISTED AS FLAMMABLE VAPOR IGNITION RESISTANT. IAW FBCR 2020, 7TH ED. P2801.7

8.) ALL EQUIPMENT & APPLIANCES, INCLUDING WATER HEATERS HAVING AN IGNITION SOURCE TO BE ELEVATED SUCH THAT THE SOURCE OF IGNITION IS MINIMUM 18" ABOVE GARAGE FLOOR UNLESS IT IS LISTED AS FLAMMABLE VAPOR IGNITION RESISTANT. IAW FBCR 2020, 7TH ED.

9.) THE TOTAL LENGTH OF VENTING FOR DRYER TO BE: **5'-0" MAXIMUM**-THE EXHAUST DUCT SHALL TERMINATE NOT LESS THAN 3 FEET (914MM) IN ANY DIRECTION FROM OPENINGS INTO BUILDINGS. PER FBCR 2020, 7TH ED. M1502.3

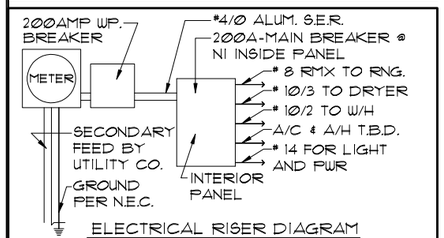

ELECTRICAL RISER DIAGRAM

N.T.S.

NOTE: ELECTRICAL MATERIALS AND INSTALLATIONS SHALL COMPLY W/ APPLICABLE PROVISIONS OF THE NATIONAL ELEC. CODE 250.52(A)(1) TO (6), LOCAL CODES & LOCAL POWER COMPANY

ELECTRICAL LEGEND

	SINGLE POLE SWITCH		OUTLET, TV/CABLE
	THREE WAY SWITCH		OUTLET, PHONE
	OUTLET 110-115		INTERCOM
	OUT. 110-115, SPLIT WIRED		CHIMES
	OUT. 110-115, W/ USB		SMOKE DETECTOR
	OUT. 110-115, CLG. MOUNT.	CM	CARBON MONOXIDE
	OUT. 110-115, FLR. MOUNT.		PUSH BUTTON
	SPCL. PURPOSE 220-240		EXHAUST FAN
	LIGHT FIXT., CLG. MTD.		EX. FAN/LIGHT COMBO
	LIGHT FIXT., WALL MTD.		DISPOSAL
	LIGHT FIXT., RECESSED		ELECTRICAL PANEL
E	LIGHT FIXT., REC. ADJUST.		CEILING FAN, PREWIRE
PC	LIGHT FIXT., PULL CHAIN	F	CEILING FAN, INSTALL
	LIGHT FIXT.,FLUORESCENT	J	ELECT. JUNCTION BOX
	LIGHT FIXT., EXT. FLOODS	DT	THERMOSTAT
EXIT	LIGHT FIXT., EMERG. EXIT	DC	DISCONNECT SWITCH
	LIGHT FIXT., EXIT/BACKUP		ELEC. POWER METER

NOTE: SEE FINAL COLOR SHEET FOR TV, FANS & PHONE LOCATIONS

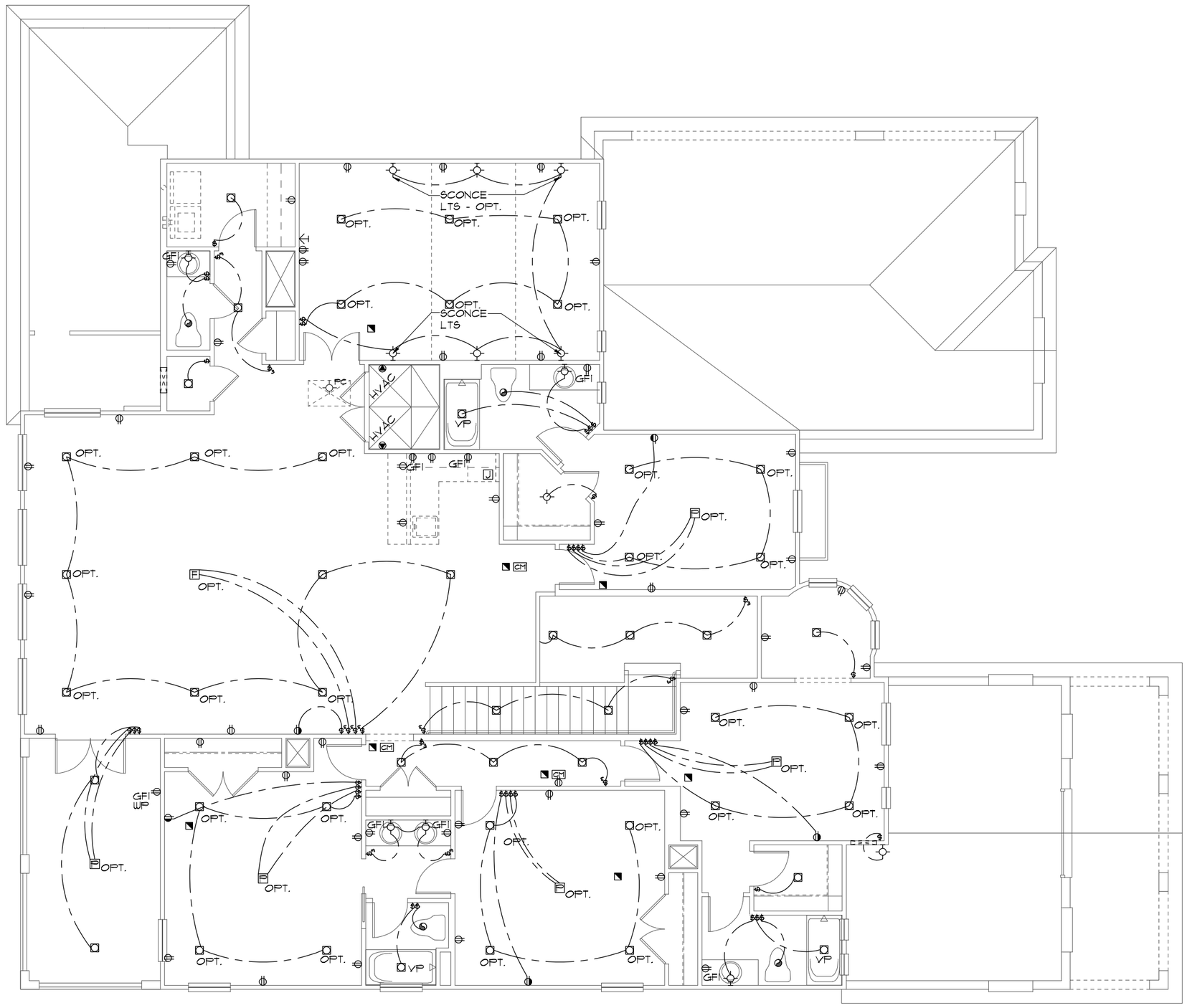

UPPER ELECTRICAL PLAN

1/8"=1'-0" (11X17) 1/4"=1'-0" (22X34)

SCALE: 1/4" = 1'-0"

0 4 8 12 16

THIS STRUCTURE IS DESIGNED TO WITHSTAND 150 MPH WINDS PER THE 7th EDITION, 2020 OF THE FLORIDA BUILDING CODE RESIDENTIAL AND IS CERTIFIED AS SUCH

LOT SPECIFIC INFORMATION

© COPYRIGHT 2012
Park Square Homes hereby reserves its common law copyrights and other copyrights in these plans, ideas, and design. These plans, ideas and designs are not to be copied or changed in any manner or form whatsoever, nor are they to be assigned to any third party without first obtaining the express written permission from Park Square Homes.

SIGNATURE SERIES

REVISIONS	BY
05-29-20	RDC

Engineering By:
DBE and C
MICHAEL A. THOMPSON
PE 47509
PHONE 407-721-2292

A DIVISION OF PARK SQUARE ENTERPRISES, INC.
5200 Vineland Road, Suite 200
Orlando, Florida 32811
Phone: (407) 529 - 3000

Park Square HOMES

UPPER FLOOR ELECTRICAL PLAN

5803T-SIDE LOAD

THE CARRARA II

DATE	09-01-14
SCALE	AS NOTED
DRAWN	RDC
JOB	N/A
SHEET	10A.1
OF	SHEETS

MECHANICAL/GENERAL NOTES

PER 7TH ED. 2020 FLA BLD. CODE-RESIDENTIAL

1.) COMPLETE DUCT DESIGN W/ SIZES & R-VALUE COMPLYING W/ THE FLORIDA ENERGY EFFICIENCY CODE FOR BUILDING CONSTRUCTION 610.1 ABC.1

2.) SUFFICIENT SPACE SHALL BE PROVIDED ADJACENT TO THE MECHANICAL COMPONENTS TO ASSURE ADEQUATE ACCESS FOR:
A.) CONSTRUCTION AND SEALING, AND
B.) SECTION M1601 PER THE FBCR 2020 7TH ED.

3.) AIR CONDITIONING SYSTEM SHALL BE COMPLETELY BALANCED. ALL ROOMS ISOLATED FROM THE RETURN AIR SHALL BE PROVIDED WITH MEANS TO COMPLY WITH SECTION M1602 OF THE FBCR CODE 2017 6TH EDITION.

4.) IAW NEC 2020- 210.12-ALL 15A OR 20A, 120V BRANCH CIRCUITS THAT SUPPLY OUTLETS IN DWELLING UNITS- FAMILY RMS, DINING RMS, LIVING RMS, PARLORS, LIBRARIES, BEDROOMS DENS, CLOSETS, SUNROOMS, RECREATION RMS, HALLWAYS OR SIMILAR AREAS SHALL BE PROTECTED BY A LISTED AFCI DEVICE OF THE COMBINATION TYPE.

5.) IAW NEC 2020- 406.11, ALL 15A AND 20A, 125V RECEPTACLES SHALL BE LISTED AS TAMPER RESISTANT.

6.) SMOKE ALARMS SHALL BE IN ALL SLEEPING AREAS, SHALL BE INTERCONNECTED, SHALL BE WITHIN 1' TO 3' OF PEAK & SHALL BE 3' FROM THE SUPPLY OR RETURN AIR- STREAM & EQUIPPED W/ A BATTERY BACKUP. ALARMS MAY NOT BE CONNECTED WHERE ALARMS ARE WIRELESS & ALL ALARMS SOUND UPON ACTIVATION IAW FBCR R314.3 & R314.4. MODEL# TO BE USED ON THIS JOB TO BE:
BRK: SMOKE-9120B, C/O- SC9120B
KIDDE: SMOKE-21007581, C/O 21006377-N

7.) ALL WATER HEATERS HAVING AN IGNITION SOURCE TO BE ELEVATED SUCH THAT THE SOURCE OF IGNITION IS MINIMUM 18" ABOVE GARAGE FLOOR UNLESS WATER HEATER IS LISTED AS FLAMMABLE VAPOR IGNITION RESISTANT. IAW FBCR 2020, 7TH ED. P2801.7

8.) ALL EQUIPMENT & APPLIANCES, INCLUDING WATER HEATERS HAVING AN IGNITION SOURCE TO BE ELEVATED SUCH THAT THE SOURCE OF IGNITION IS MINIMUM 18" ABOVE GARAGE FLOOR UNLESS IT IS LISTED AS FLAMMABLE VAPOR IGNITION RESISTANT. IAW FBCR 2020, 7TH ED.

9.) THE TOTAL LENGTH OF VENTING FOR DRYER TO BE: **5'-0" MAXIMUM**-THE EXHAUST DUCT SHALL TERMINATE NOT LESS THAN 3 FEET (914MM) IN ANY DIRECTION FROM OPENINGS INTO BUILDINGS. PER FBCR 2020, 7TH ED. M1502.3

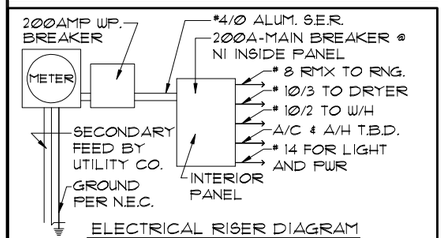

ELECTRICAL RISER DIAGRAM

NOTE: N.T.S.
ELECTRICAL MATERIALS AND INSTALLATIONS SHALL COMPLY W/ APPLICABLE PROVISIONS OF THE NATIONAL ELEC. CODE 250.52(A)(1) TO (6), LOCAL CODES & LOCAL POWER COMPANY

ELECTRICAL LEGEND

	SINGLE POLE SWITCH		OUTLET, TV/CABLE
	THREE WAY SWITCH		OUTLET, PHONE
	OUTLET 110-115		INTERCOM
	OUT. 110-115, SPLIT WIRED		CHIMES
	OUT. 110-115, W/ USB		SMOKE DETECTOR
	OUT. 110-115, CLG. MOUNT.	CM	CARBON MONOXIDE
	OUT. 110-115, FLR. MOUNT.		PUSH BUTTON
	SPCL. PURPOSE 220-240		EXHAUST FAN
	LIGHT FIXT., CLG. MTD.		EX. FAN/LIGHT COMBO
	LIGHT FIXT., WALL MTD.		DISPOSAL
	LIGHT FIXT., RECESSED		ELECTRICAL PANEL
E	LIGHT FIXT., REC. ADJUST.		CEILING FAN, PREWIRE
PC	LIGHT FIXT., PULL CHAIN	F	CEILING FAN, INSTALL
	LIGHT FIXT.,FLUORESCENT	J	ELECT. JUNCTION BOX
	LIGHT FIXT., EXT. FLOODS	DT	THERMOSTAT
EXIT	LIGHT FIXT., EMERG. EXIT	DC	DISCONNECT SWITCH
	LIGHT FIXT., EXIT/BACKUP		ELEC. POWER METER

NOTE: SEE FINAL COLOR SHEET FOR TV, FANS & PHONE LOCATIONS

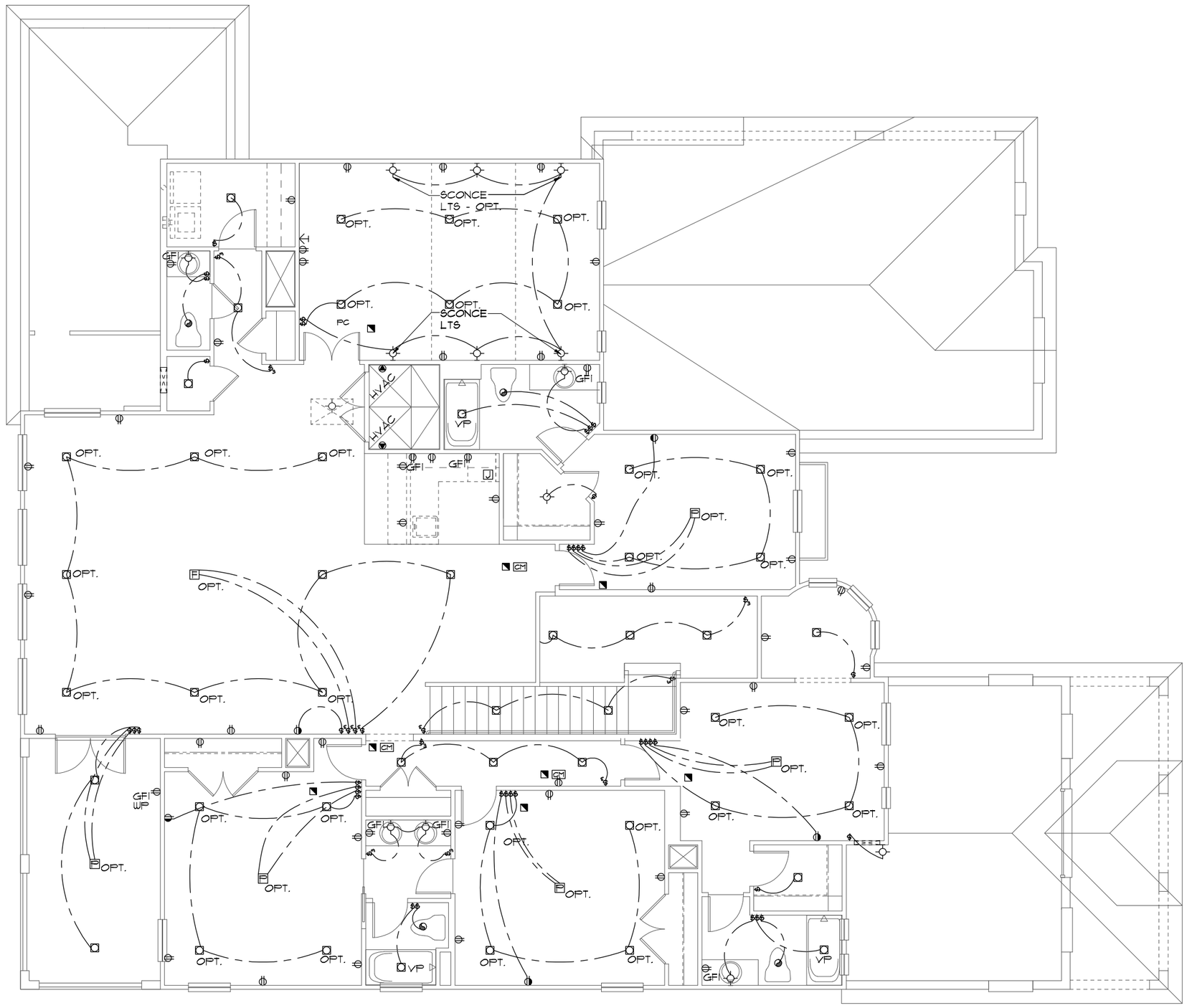

UPPER ELECTRICAL PLAN

1/8"=1'-0" (11X17) 1/4"=1'-0" (22X34)

SCALE: 1/4" = 1'-0"
0 4 8 12 16

THIS STRUCTURE IS DESIGNED TO WITHSTAND 150 MPH WINDS PER THE 7th EDITION, 2020 OF THE FLORIDA BUILDING CODE RESIDENTIAL AND IS CERTIFIED AS SUCH

LOT SPECIFIC INFORMATION

© COPYRIGHT 2012
Park Square Homes hereby reserves its common law copyrights and other copyrights in these plans, ideas, and design. These plans, ideas and designs are not to be copied or changed in any manner or form whatsoever, nor are they to be assigned to any third party without first obtaining the express written permission from Park Square Homes.

SIGNATURE SERIES

REVISIONS	BY
05-29-20	RDC

Engineering By:
DBE and C
MICHAEL A. THOMPSON
PE 47509
PHONE 407-721-2292

A DIVISION OF PARK SQUARE ENTERPRISES, INC.
5200 Vineland Road, Suite 200
Orlando, Florida 32811
Phone: (407) 529 - 3000

Park Square HOMES

UPPER FLOOR ELECTRICAL PLAN

5803T-SIDE LOAD

THE CARRARA II

DATE	09-01-14
SCALE	AS NOTED
DRAWN	RDC
JOB	N/A
SHEET	10C.1
OF	SHEETS

MECHANICAL/GENERAL NOTES

PER 7TH ED. 2020 FLA BLD. CODE-RESIDENTIAL

1.) COMPLETE DUCT DESIGN W/ SIZES & R-VALUE COMPLYING W/ THE FLORIDA ENERGY EFFICIENCY CODE FOR BUILDING CONSTRUCTION 610.1 ABC.1

2.) SUFFICIENT SPACE SHALL BE PROVIDED ADJACENT TO THE MECHANICAL COMPONENTS TO ASSURE ADEQUATE ACCESS FOR:
A.) CONSTRUCTION AND SEALING, AND
B.) SECTION M1601 PER THE FBCR 2020 7TH ED.

3.) AIR CONDITIONING SYSTEM SHALL BE COMPLETELY BALANCED. ALL ROOMS ISOLATED FROM THE RETURN AIR SHALL BE PROVIDED WITH MEANS TO COMPLY WITH SECTION M1602 OF THE FBCR CODE 2017 6TH EDITION.

4.) IAW NEC 2020- 210.12-ALL 15A OR 20A, 120V BRANCH CIRCUITS THAT SUPPLY OUTLETS IN DWELLING UNITS- FAMILY RMS, DINING RMS, LIVING RMS, PARLORS, LIBRARIES, BEDROOMS DENS, CLOSETS, SUNROOMS, RECREATION RMS, HALLWAYS OR SIMILAR AREAS SHALL BE PROTECTED BY A LISTED AFCI DEVICE OF THE COMBINATION TYPE.

5.) IAW NEC 2020- 406.11, ALL 15A AND 20A, 125V RECEPTACLES SHALL BE LISTED AS TAMPER RESISTANT.

6.) SMOKE ALARMS SHALL BE IN ALL SLEEPING AREAS, SHALL BE INTERCONNECTED, SHALL BE WITHIN 1' TO 3' OF PEAK & SHALL BE 3' FROM THE SUPPLY OR RETURN AIR- STREAM & EQUIPPED W/ A BATTERY BACKUP. ALARMS MAY NOT BE CONNECTED WHERE ALARMS ARE WIRELESS & ALL ALARMS SOUND UPON ACTIVATION IAW FBCR R314.3 & R314.4. MODEL# TO BE USED ON THIS JOB TO BE:
BRK: SMOKE-9120B, C/O- SC9120B
KIDDE: SMOKE-21007581, C/O 21006377-N

7.) ALL WATER HEATERS HAVING AN IGNITION SOURCE TO BE ELEVATED SUCH THAT THE SOURCE OF IGNITION IS MINIMUM 18" ABOVE GARAGE FLOOR UNLESS WATER HEATER IS LISTED AS FLAMMABLE VAPOR IGNITION RESISTANT. IAW FBCR 2020, 7TH ED. P2801.7

8.) ALL EQUIPMENT & APPLIANCES, INCLUDING WATER HEATERS HAVING AN IGNITION SOURCE TO BE ELEVATED SUCH THAT THE SOURCE OF IGNITION IS MINIMUM 18" ABOVE GARAGE FLOOR UNLESS IT IS LISTED AS FLAMMABLE VAPOR IGNITION RESISTANT. IAW FBCR 2020, 7TH ED.

9.) THE TOTAL LENGTH OF VENTING FOR DRYER TO BE: **5'-0" MAXIMUM**-THE EXHAUST DUCT SHALL TERMINATE NOT LESS THAN 3 FEET (914MM) IN ANY DIRECTION FROM OPENINGS INTO BUILDINGS. PER FBCR 2020, 7TH ED. M1502.3

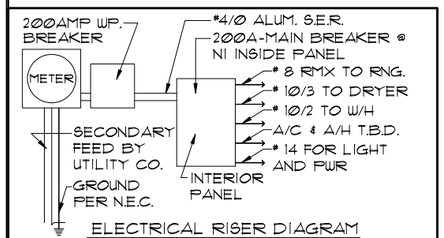

ELECTRICAL RISER DIAGRAM
N.T.S.

NOTE: ELECTRICAL MATERIALS AND INSTALLATIONS SHALL COMPLY W/ APPLICABLE PROVISIONS OF THE NATIONAL ELEC. CODE 250.52(A)(1) TO (6), LOCAL CODES & LOCAL POWER COMPANY

ELECTRICAL LEGEND

	SINGLE POLE SWITCH		OUTLET, TV/CABLE
	THREE WAY SWITCH		OUTLET, PHONE
	OUTLET 110-115		INTERCOM
	OUT. 110-115, SPLIT WIRED		CHIMES
	OUT. 110-115, W/ USB		SMOKE DETECTOR
	OUT. 110-115, CLG. MOUNT.	CM	CARBON MONOXIDE
	OUT. 110-115, FLR. MOUNT.		PUSH BUTTON
	SPCL. PURPOSE 220-240		EXHAUST FAN
	LIGHT FIXT., CLG. MTD.		EX. FAN/LIGHT COMBO
	LIGHT FIXT., WALL MTD.		DISPOSAL
	LIGHT FIXT., RECESSED		ELECTRICAL PANEL
E	LIGHT FIXT., REC. ADJUST.	F	CEILING FAN, PREWIRE
PC	LIGHT FIXT., PULL CHAIN	F	CEILING FAN, INSTALL
	LIGHT FIXT.,FLUORESCENT	J	ELECT. JUNCTION BOX
	LIGHT FIXT., EXT. FLOODS	DT	THERMOSTAT
EXIT	LIGHT FIXT., EMERG. EXIT	DC	DISCONNECT SWITCH
	LIGHT FIXT., EXIT/BACKUP		ELEC. POWER METER

NOTE: SEE FINAL COLOR SHEET FOR TV, FANS & PHONE LOCATIONS

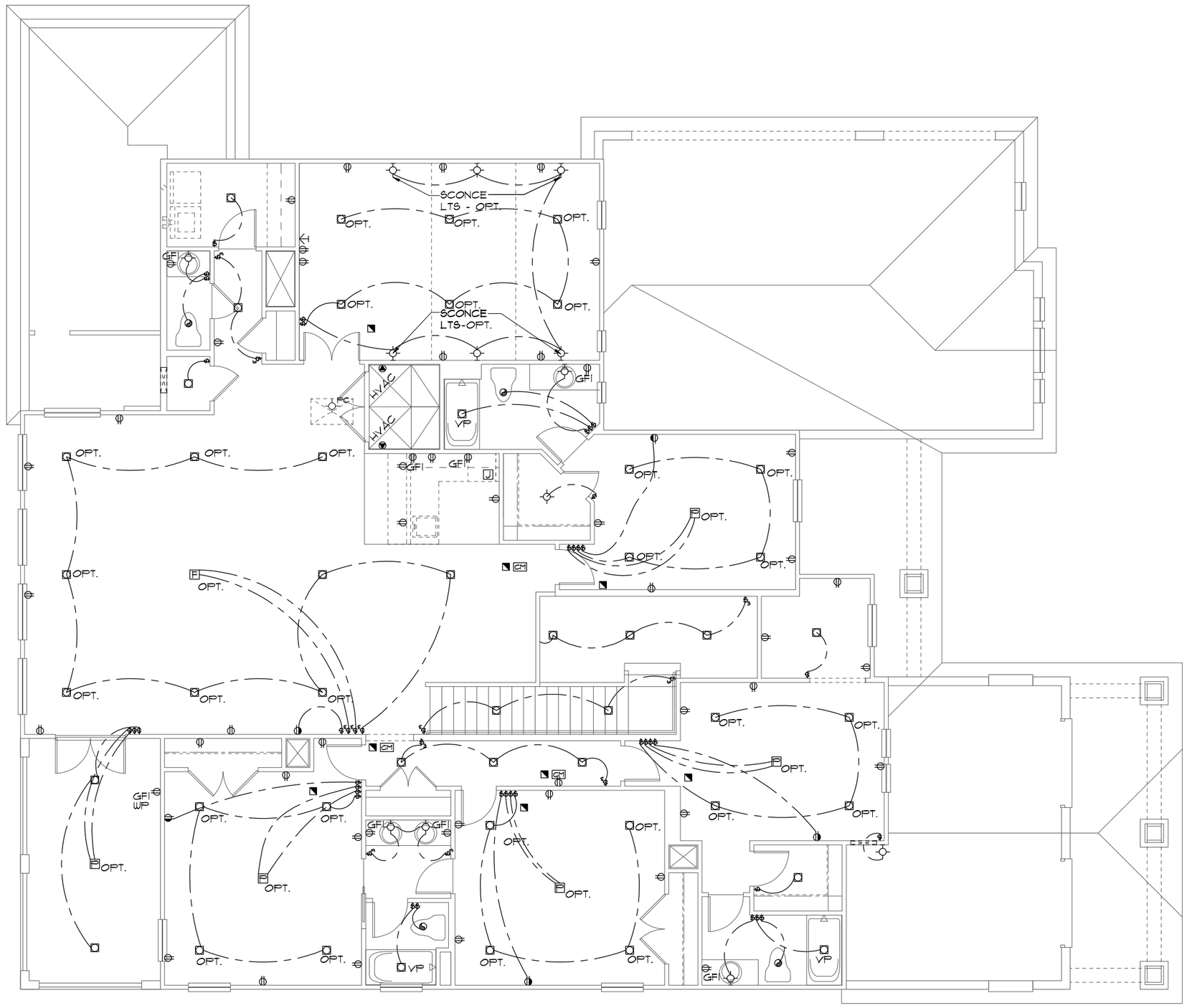

UPPER ELECTRICAL PLAN

1/8"=1'-0" (11X17) 1/4"=1'-0" (22X34)

SCALE: 1/4" = 1'-0"
0 4 8 12 16

THIS STRUCTURE IS DESIGNED TO WITHSTAND 150 MPH WINDS PER THE 7th EDITION, 2020 OF THE FLORIDA BUILDING CODE RESIDENTIAL AND IS CERTIFIED AS SUCH

LOT SPECIFIC INFORMATION

© COPYRIGHT 2012
Park Square Homes hereby reserves its common law copyrights and other copyrights in these plans, ideas, and design. These plans, ideas and designs are not to be copied or changed in any manner or form whatsoever, nor are they to be assigned to any third party without first obtaining the express written permission from Park Square Homes.

SIGNATURE SERIES

REVISIONS	BY
05-29-20	RDC

Engineering By:
DBE and C
MICHAEL A. THOMPSON
PE 47509
PHONE 407-721-2292

A DIVISION OF PARK SQUARE ENTERPRISES, INC.
5200 Vineland Road, Suite 200
Orlando, Florida 32811
Phone: (407) 529 - 3000

Park Square HOMES

UPPER FLOOR ELECTRICAL PLAN

5803T-SIDE LOAD
THE CARRARA II

DATE	09-01-14
SCALE	AS NOTED
DRAWN	RDC
JOB	N/A
SHEET	10D.1
OF	SHEETS

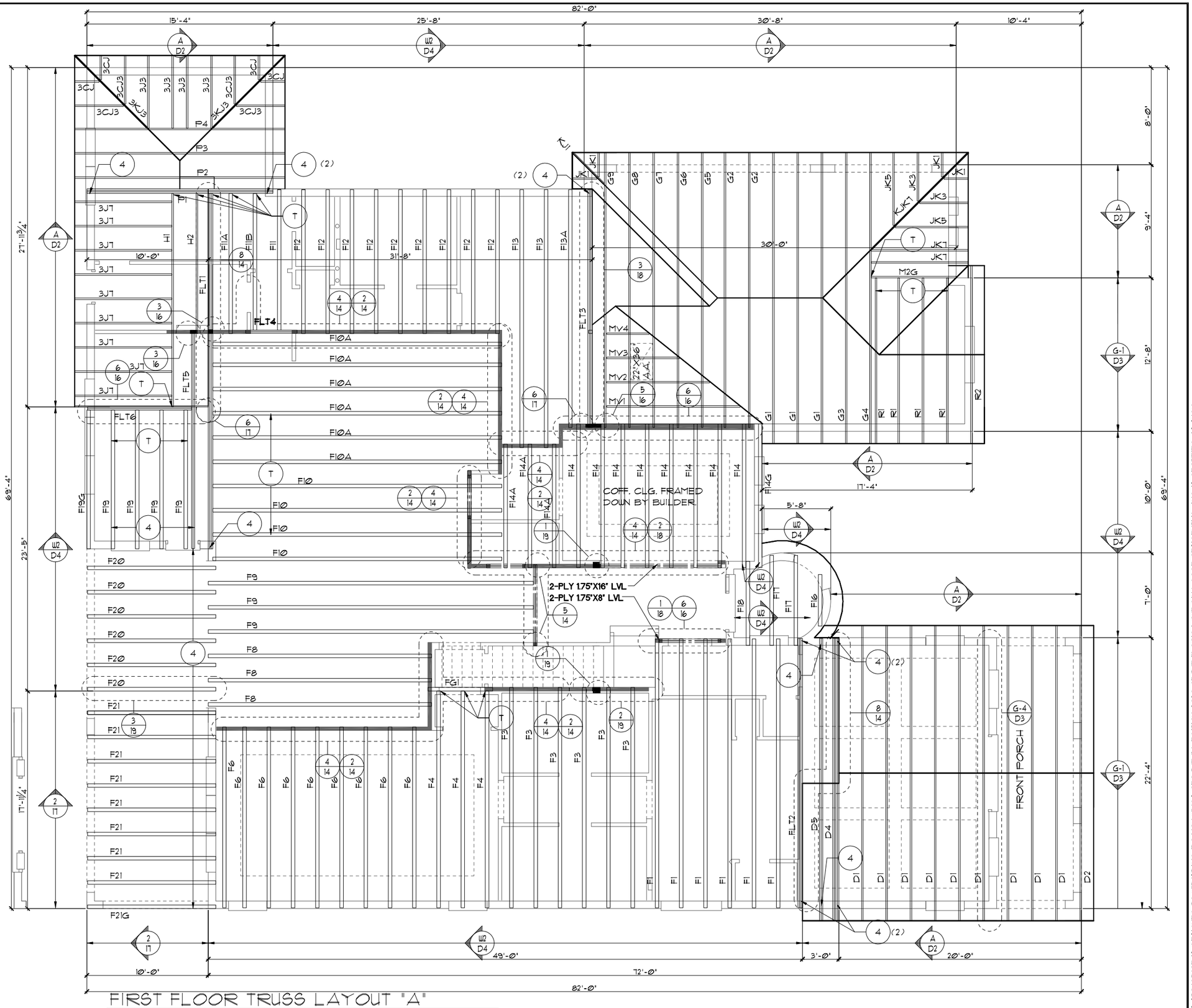

NOTES

1. TYPICAL ROOF GABLE OVERHANG TO BE **12"** UNLESS OTHERWISE NOTED.
2. TYPICAL ROOF EAVES OVERHANG TO BE **12"** UNLESS OTHERWISE NOTED.
3. PROVIDE AND INSTALL FLASHING AND ROOFING AS PER NATIONAL ROOFING AND SHEET METAL ASSOC. STANDARDS AND/ OR ACCEPTABLE INDUSTRY PRACTICE AND IN ACCORDANCE WITH THE 7TH EDITION (2020) FLORIDA RESIDENTIAL CODE.
4. ALL ROOF TRUSSES, GIRDERS, BEAMS, HEADERS, ETC. TO BE SIZED BY TRUSS MANUFACTURER OR FL. REG. ENG.
5. TRUSSES SHALL BE BRACED TO PREVENT ROTATION & PROVIDE LATERAL STABILITY IN ACCORDANCE WITH THE REQUIREMENTS SPECIFIED IN THE CONSTRUCTION DOCUMENTS FOR BUILDING & ON THE INDIVIDUAL TRUSS DESIGN DRAWINGS. IN THE ABSENCE OF SPECIFIC BRACING REQUIREMENTS, TRUSSES SHALL BE BRACED IN ACCORDANCE WITH TPI/WTCA BCSI 1.
6. REFER TO TRUSS MANUFACTURER'S DRAWINGS FOR TRUSS PLACEMENT & TRUSS TO TRUSS CONNECTIONS.
7. TILE ROOF: UNDERLAYMENT TO BE INSTALLED IAW FBCR 2020, 7TH EDITION R905.3.3. Underlayment materials required to comply with ASTM D226, D1970, D4869 and D6757 shall bear a label indicating compliance to the standard designation and, if applicable, type classification indicated in Table R905.1.1. Underlayment shall be applied and attached in accordance with Table R905.1.1.
8. OFF RIDGE VENTS MAXIMUN OPENING SIZES :
   - O-HAGIN - 7" X 19" HOLE

FIRST FLOOR TRUSS LAYOUT "A"

1/8"=1'-0" (11X17) 1/4"=1'-0" (22X34)

THIS STRUCTURE IS DESIGNED TO WITHSTAND 150 MPH WINDS PER THE 7th EDITION, 2020 OF THE FLORIDA BUILDING CODE RESIDENTIAL AND IS CERTIFIED AS SUCH

LOT SPECIFIC INFORMATION

© COPYRIGHT 2012 Park Square Homes hereby reserves its common law copyrights and other copyrights in these plans, ideas, and design. These plans, ideas and designs are not to be copied or changed in any manner or form whatsoever, nor are they to be assigned to any third party without first obtaining the express written permission from Park Square Homes.

SIGNATURE SERIES

REVISIONS	BY
05-29-20	RDC

Engineering By:
DBE and C
MICHAEL A. THOMPSON
PE 47509
PHONE 407-721-2292

A DIVISION OF PARK SQUARE ENTERPRISES, INC.
5200 Vineland Road, Suite 200
Orlando, Florida 32811
Phone: (407) 529 - 3000

Park Square HOMES

LAYOUT

FIRST FLOOR TRUSS LAYOUT

5803T-SIDE LOAD

THE CARRARA II

DATE	09-01-14
SCALE	AS NOTED
DRAWN	RDC
JOB	N/A
SHEET	11A.1
OF	SHEETS

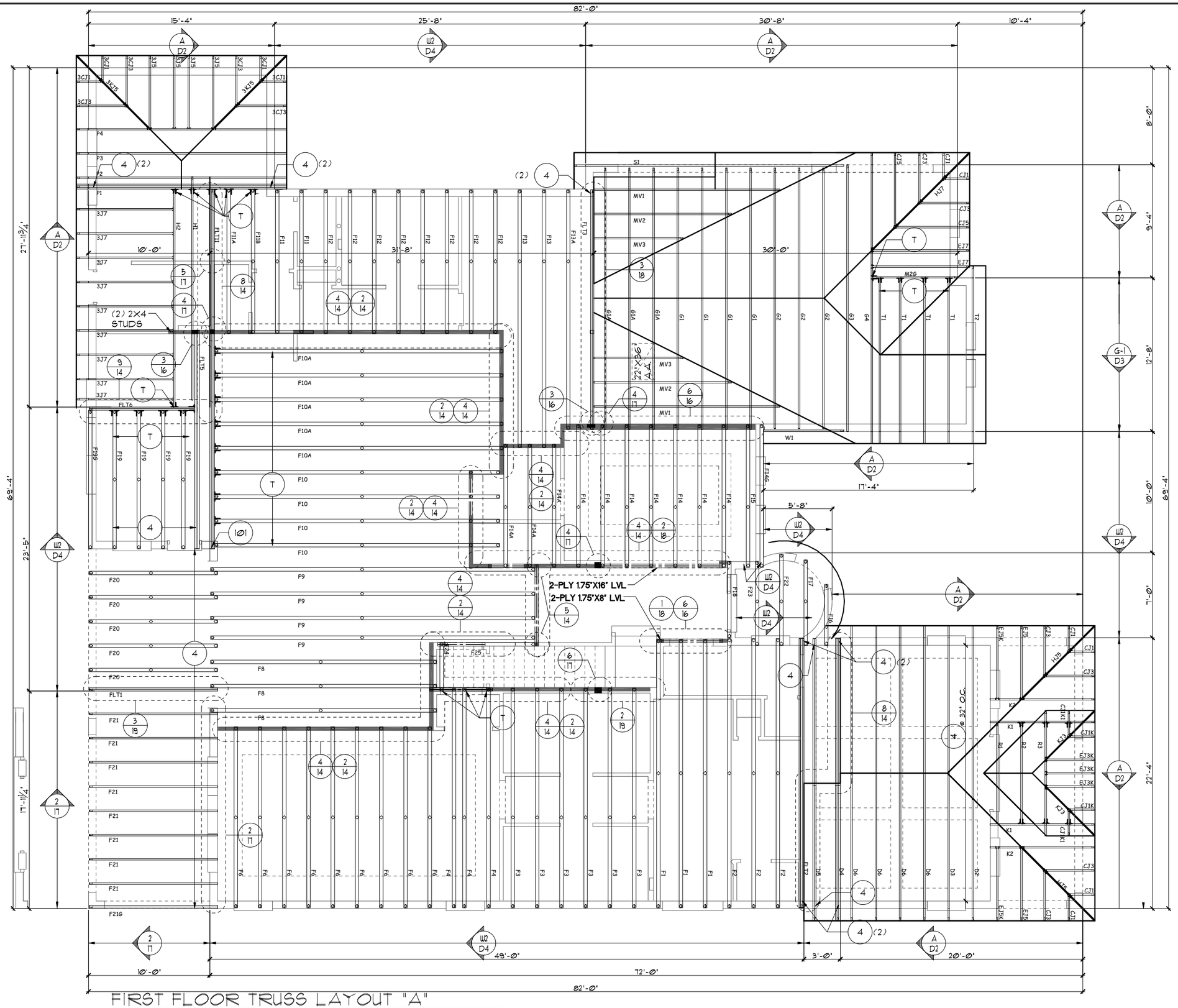

FIRST FLOOR TRUSS LAYOUT "A"

1/8"=1'-0" (11X17) 1/4"=1'-0" (22X34)

NOTES

1. TYPICAL ROOF GABLE OVERHANG TO BE **12"** UNLESS OTHERWISE NOTED.
2. TYPICAL ROOF EAVES OVERHANG TO BE **12"** UNLESS OTHERWISE NOTED.
3. PROVIDE AND INSTALL FLASHING AND ROOFING AS PER NATIONAL ROOFING AND SHEET METAL ASSOC. STANDARDS AND/ OR ACCEPTABLE INDUSTRY PRACTICE AND IN ACCORDANCE WITH THE 7TH EDITION (2020) FLORIDA RESIDENTIAL CODE.
4. ALL ROOF TRUSSES, GIRDERS, BEAMS, HEADERS, ETC. TO BE SIZED BY TRUSS MANUFACTURER OR FL. REG. ENG.
5. TRUSSES SHALL BE BRACED TO PREVENT ROTATION & PROVIDE LATERAL STABILITY IN ACCORDANCE WITH THE REQUIREMENTS SPECIFIED IN THE CONSTRUCTION DOCUMENTS FOR BUILDING & ON THE INDIVIDUAL TRUSS DESIGN DRAWINGS. IN THE ABSENCE OF SPECIFIC BRACING REQUIREMENTS, TRUSSES SHALL BE BRACED IN ACCORDANCE WITH TPI/WTCA BCSI 1.
6. REFER TO TRUSS MANUFACTURER'S DRAWINGS FOR TRUSS PLACEMENT & TRUSS TO TRUSS CONNECTIONS.
7. TILE ROOF: UNDERLAYMENT TO BE INSTALLED IAW FBCR 2020, 7TH EDITION R905.3.3. Underlayment materials required to comply with ASTM D226, D1970, D4869 and D6757 shall bear a label indicating compliance to the standard designation and, if applicable, type classification indicated in Table R905.1.1. Underlayment shall be applied and attached in accordance with Table R905.1.1.
8. OFF RIDGE VENTS MAXIMUN OPENING SIZES :
   - O-HAGIN - 7" X 19" HOLE

THIS STRUCTURE IS DESIGNED TO WITHSTAND 150 MPH WINDS PER THE 7th EDITION, 2020 OF THE FLORIDA BUILDING CODE RESIDENTIAL AND IS CERTIFIED AS SUCH

SIGNATURE SERIES

LOT SPECIFIC INFORMATION

© COPYRIGHT 2012
Park Square Homes hereby reserves its common law copyrights and other copyrights in these plans, ideas, and design. These plans, ideas and designs are not to be copied or changed in any manner or form whatsoever, nor are they to be assigned to any third party without first obtaining the express written permission from Park Square Homes.

REVISIONS	BY
05-29-20	RDC

Engineering By:
DBE and C
MICHAEL A. THOMPSON
PE 47509
PHONE 407-721-2292

A DIVISION OF PARK SQUARE ENTERPRISES, INC.
5200 Vineland Road, Suite 200
Orlando, Florida 32811
Phone: (407) 529 - 3000

Park Square HOMES

FIRST FLOOR TRUSS LAYOUT

5803T-SIDE LOAD

THE CARRARA II

DATE	09-01-14
SCALE	AS NOTED
DRAWN	RDC
JOB	N/A
SHEET	11C.1
OF	SHEETS

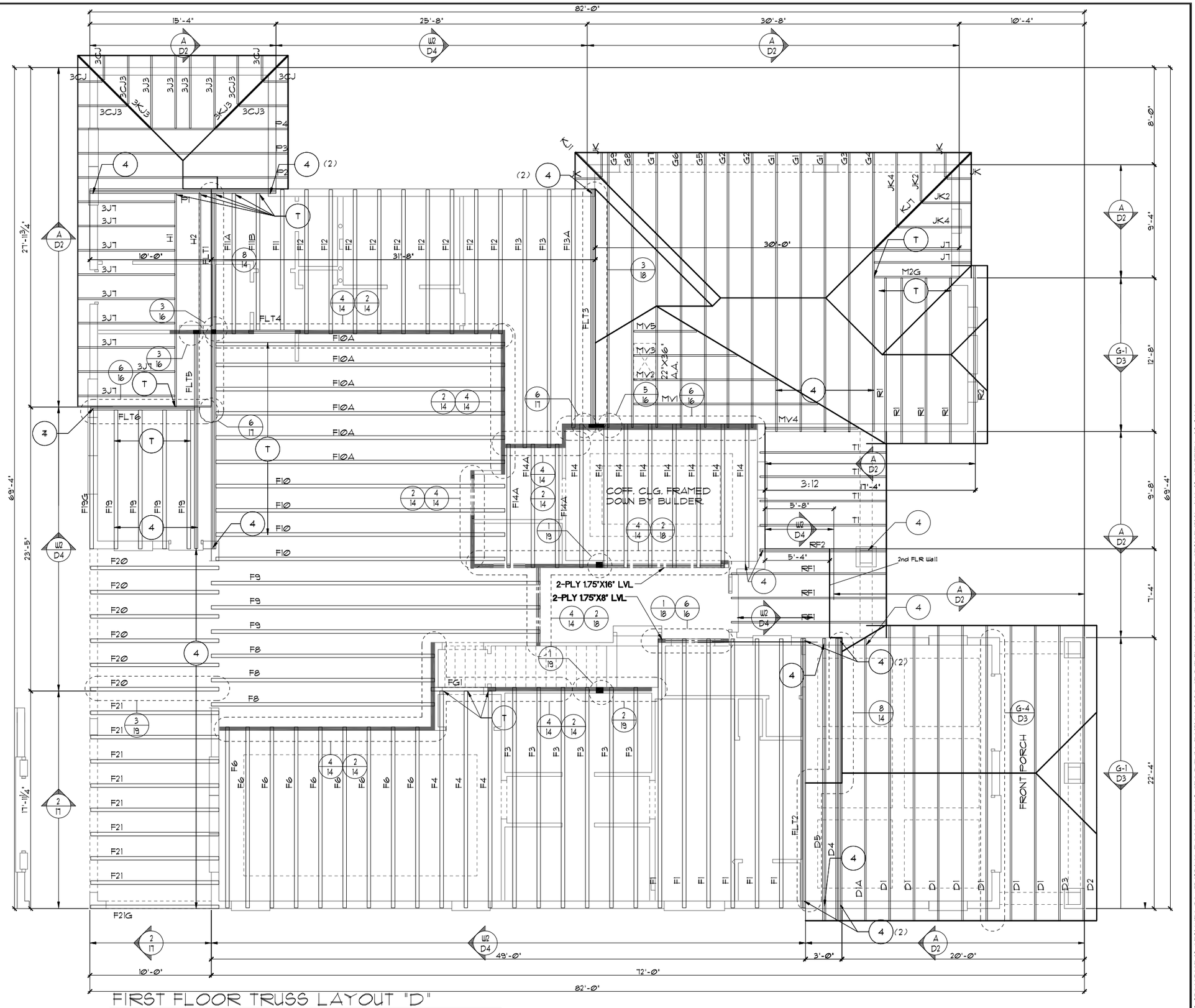

NOTES

1. TYPICAL ROOF GABLE OVERHANG TO BE **12"** UNLESS OTHERWISE NOTED.
2. TYPICAL ROOF EAVES OVERHANG TO BE **12"** UNLESS OTHERWISE NOTED.
3. PROVIDE AND INSTALL FLASHING AND ROOFING AS PER NATIONAL ROOFING AND SHEET METAL ASSOC. STANDARDS AND/ OR ACCEPTABLE INDUSTRY PRACTICE AND IN ACCORDANCE WITH THE 7TH EDITION (2020) FLORIDA RESIDENTIAL CODE.
4. ALL ROOF TRUSSES, GIRDERS, BEAMS, HEADERS, ETC. TO BE SIZED BY TRUSS MANUFACTURER OR FL. REG. ENG.
5. TRUSSES SHALL BE BRACED TO PREVENT ROTATION & PROVIDE LATERAL STABILITY IN ACCORDANCE WITH THE REQUIREMENTS SPECIFIED IN THE CONSTRUCTION DOCUMENTS FOR BUILDING & ON THE INDIVIDUAL TRUSS DESIGN DRAWINGS. IN THE ABSENCE OF SPECIFIC BRACING REQUIREMENTS, TRUSSES SHALL BE BRACED IN ACCORDANCE WITH TPI/WTCA BCSI 1.
6. REFER TO TRUSS MANUFACTURER'S DRAWINGS FOR TRUSS PLACEMENT & TRUSS TO TRUSS CONNECTIONS.
7. TILE ROOF: UNDERLAYMENT TO BE INSTALLED IAW FBCR 2020, 7TH EDITION R905.3.3. Underlayment materials required to comply with ASTM D226, D1970, D4869 and D6757 shall bear a label indicating compliance to the standard designation and, if applicable, type classification indicated in Table R905.1.1. Underlayment shall be applied and attached in accordance with Table R905.1.1.
8. OFF RIDGE VENTS MAXIMUN OPENING SIZES :
   - O-HAGIN - 7" X 19" HOLE

FIRST FLOOR TRUSS LAYOUT "D"

1/8"=1'-0" (11X17) 1/4"=1'-0" (22X34)

THIS STRUCTURE IS DESIGNED TO WITHSTAND 150 MPH WINDS PER THE 7th EDITION, 2020 OF THE FLORIDA BUILDING CODE RESIDENTIAL AND IS CERTIFIED AS SUCH

SIGNATURE SERIES

LOT SPECIFIC INFORMATION

© COPYRIGHT 2012 Park Square Homes hereby reserves its common law copyrights and other copyrights in these plans, ideas, and design. These plans, ideas and designs are not to be copied or changed in any manner or form whatsoever, nor are they to be assigned to any third party without first obtaining the express written permission from Park Square Homes.

REVISIONS	BY
05-29-20	RDC

Engineering By:
DBE and C
MICHAEL A. THOMPSON
PE 47509
PHONE 407-721-2292

A DIVISION OF PARK SQUARE ENTERPRISES, INC.
5200 Vineland Road, Suite 200
Orlando, Florida 32811
Phone: (407) 529 - 3000

Park Square HOMES

FIRST FLOOR TRUSS LAYOUT

5803T-SIDE LOAD

THE CARRARA II

DATE	09-01-14
SCALE	AS NOTED
DRAWN	RDC
JOB	N/A
SHEET	11D.1
OF	SHEETS

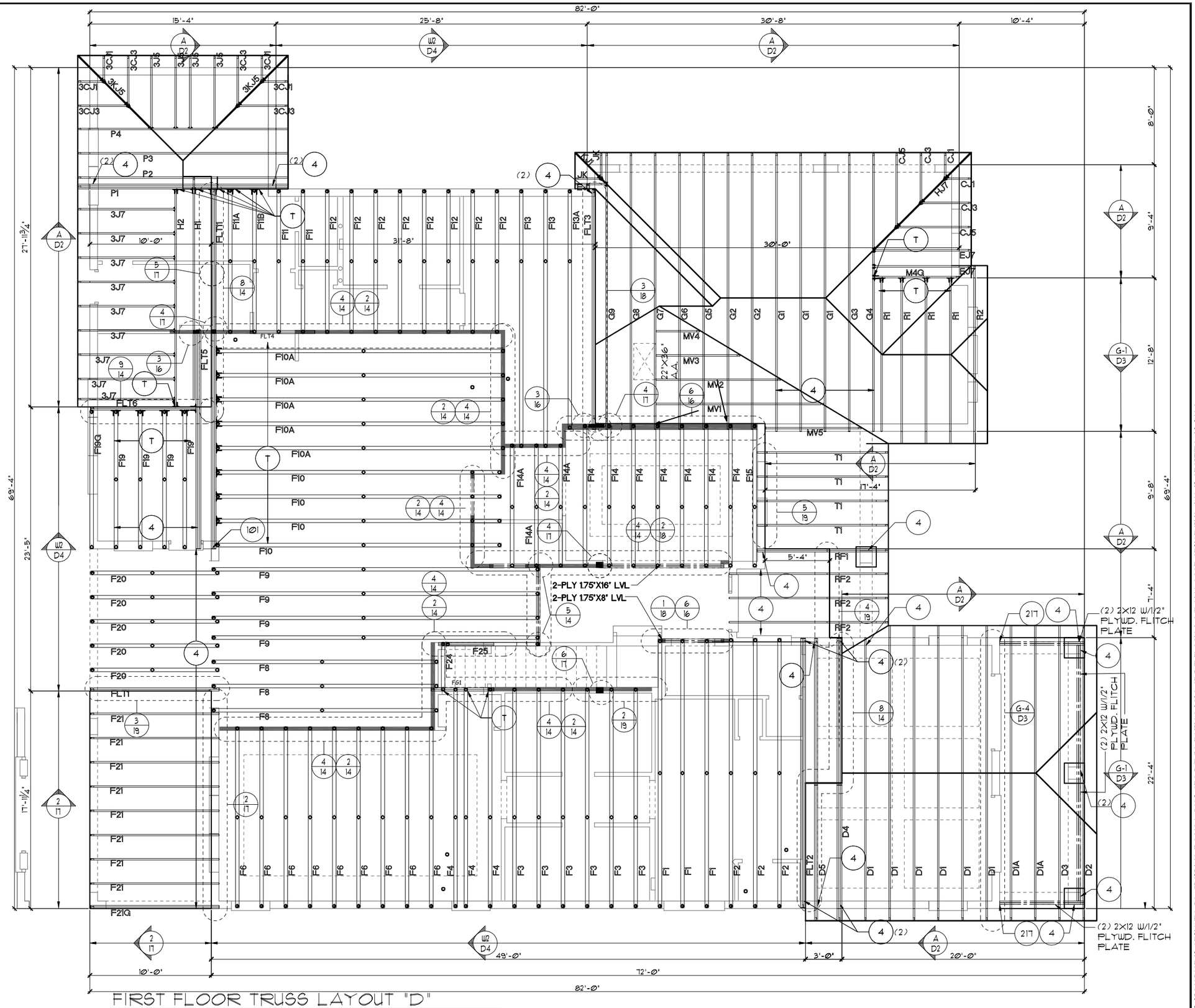

NOTES

1. TYPICAL ROOF GABLE OVERHANG TO BE **12"** UNLESS OTHERWISE NOTED.
2. TYPICAL ROOF EAVES OVERHANG TO BE **12"** UNLESS OTHERWISE NOTED.
3. PROVIDE AND INSTALL FLASHING AND ROOFING AS PER NATIONAL ROOFING AND SHEET METAL ASSOC. STANDARDS AND/ OR ACCEPTABLE INDUSTRY PRACTICE AND IN ACCORDANCE WITH THE 7TH EDITION (2020) FLORIDA RESIDENTIAL CODE.
4. ALL ROOF TRUSSES, GIRDERS, BEAMS, HEADERS, ETC. TO BE SIZED BY TRUSS MANUFACTURER OR FL. REG. ENG.
5. TRUSSES SHALL BE BRACED TO PREVENT ROTATION & PROVIDE LATERAL STABILITY IN ACCORDANCE WITH THE REQUIREMENTS SPECIFIED IN THE CONSTRUCTION DOCUMENTS FOR BUILDING & ON THE INDIVIDUAL TRUSS DESIGN DRAWINGS. IN THE ABSENCE OF SPECIFIC BRACING REQUIREMENTS, TRUSSES SHALL BE BRACED IN ACCORDANCE WITH TPI/WTCA BCSI 1.
6. REFER TO TRUSS MANUFACTURER'S DRAWINGS FOR TRUSS PLACEMENT & TRUSS TO TRUSS CONNECTIONS.
7. TILE ROOF: UNDERLAYMENT TO BE INSTALLED IAW FBCR 2020, 7TH EDITION R905.3.3. Underlayment materials required to comply with ASTM D226, D1970, D4869 and D6757 shall bear a label indicating compliance to the standard designation and, if applicable, type classification indicated in Table R905.1.1. Underlayment shall be applied and attached in accordance with Table R905.1.1.
8. OFF RIDGE VENTS MAXIMUN OPENING SIZES :
   - O-HAGIN - 7" X 19" HOLE

FIRST FLOOR TRUSS LAYOUT "D"

1/8"=1'-0" (11X17) 1/4"=1'-0" (22X34)

THIS STRUCTURE IS DESIGNED TO WITHSTAND 150 MPH WINDS PER THE 7th EDITION, 2020 OF THE FLORIDA BUILDING CODE RESIDENTIAL AND IS CERTIFIED AS SUCH

SIGNATURE SERIES

LOT SPECIFIC INFORMATION

© COPYRIGHT 2012 Park Square Homes hereby reserves its common law copyrights and other copyrights in these plans, ideas, and design. These plans, ideas and designs are not to be copied or changed in any manner or form whatsoever, nor are they to be assigned to any third party without first obtaining the express written permission from Park Square Homes.

REVISIONS	BY
05-29-20	RDC

Engineering By:
DBE and C
MICHAEL A. THOMPSON
PE 47509
PHONE 407-721-2292

A DIVISION OF PARK SQUARE ENTERPRISES, INC.
5200 Vineland Road, Suite 200
Orlando, Florida 32811
Phone: (407) 529 - 3000

Park Square HOMES

FIRST FLOOR TRUSS LAYOUT

5803T-SIDE LOAD

THE CARRARA II

DATE	09-01-14
SCALE	AS NOTED
DRAWN	RDC
JOB	N/A
SHEET	11D.1
OF	SHEETS

ATTIC VENTILATION CALCULATIONS

PER FBC2020 7TH EDITION R806: MIN. 40% - MAX. 50% OF REQUIRED VENTILATION TO BE IN UPPER PORTION OF ATTIC SPACE AND THE BALANCE TO BE IN LOWER PORTION (EAVES).

THE MINIMUM NET VENTILATION AREA SHALL BE 1/150 OF VENTED SPACE:

TOTAL VENTED SPACE: 3,829 S.F. / 300 = 12.76 S.F. NET FREE VENT. REQUIRED

UPPER PORTION VENTILATION TOTAL:------- 5.82 S.F.
PROVIDED W/OFF RIDGE VENTS: 6 VENTS @ .975 S.F. /VENT.
(VENT TYPE: O'HAGIN MODEL 'S')

LOWER PORTION VENTILATION TOTAL:------- 10.32 S.F.
PROVIDED W/ VENTILATED SOFFITS @ EAVE:
(118.66 S.F. @ .087 S.F. VENTING PER L.F.)

UPPER PORTION PERCENTAGE: 45%
LOWER PORTION PERCENTAGE: 62%

NOTES

1. TYPICAL ROOF GABLE OVERHANG TO BE 12" UNLESS OTHERWISE NOTED.
2. TYPICAL ROOF EAVES OVERHANG TO BE 12" UNLESS OTHERWISE NOTED.
3. PROVIDE AND INSTALL FLASHING AND ROOFING AS PER NATIONAL ROOFING AND SHEET METAL ASSOC. STANDARDS AND/ OR ACCEPTABLE INDUSTRY PRACTICE AND IN ACCORDANCE WITH THE 7TH EDITION (2020) FLORIDA RESIDENTIAL CODE.
4. ALL ROOF TRUSSES, GIRDERS, BEAMS, HEADERS, ETC. TO BE SIZED BY TRUSS MANUFACTURER OR FL. REG. ENG.
5. TRUSSES SHALL BE BRACED TO PREVENT ROTATION & PROVIDE LATERAL STABILITY IN ACCORDANCE WITH THE REQUIREMENTS SPECIFIED IN THE CONSTRUCTION DOCUMENTS FOR BUILDING & ON THE INDIVIDUAL TRUSS DESIGN DRAWINGS. IN THE ABSENCE OF SPECIFIC BRACING REQUIREMENTS, TRUSSES SHALL BE BRACED IN ACCORDANCE WITH TPI/WTCA BCSI 1.
6. REFER TO TRUSS MANUFACTURER'S DRAWINGS FOR TRUSS PLACEMENT & TRUSS TO TRUSS CONNECTIONS.
7. TILE ROOF: UNDERLAYMENT TO BE INSTALLED IAW FBCR 2020, 7TH EDITION R905.3.3. Underlayment materials required to comply with ASTM D226, D1970, D4869 and D6757 shall bear a label indicating compliance to the standard designation and, if applicable, type classification indicated in Table R905.1.1. Underlayment shall be applied and attached in accordance with Table R905.1.1.
8. OFF RIDGE VENTS MAXIMUN OPENING SIZES :
   - O-HAGIN - 7' X 19" HOLE

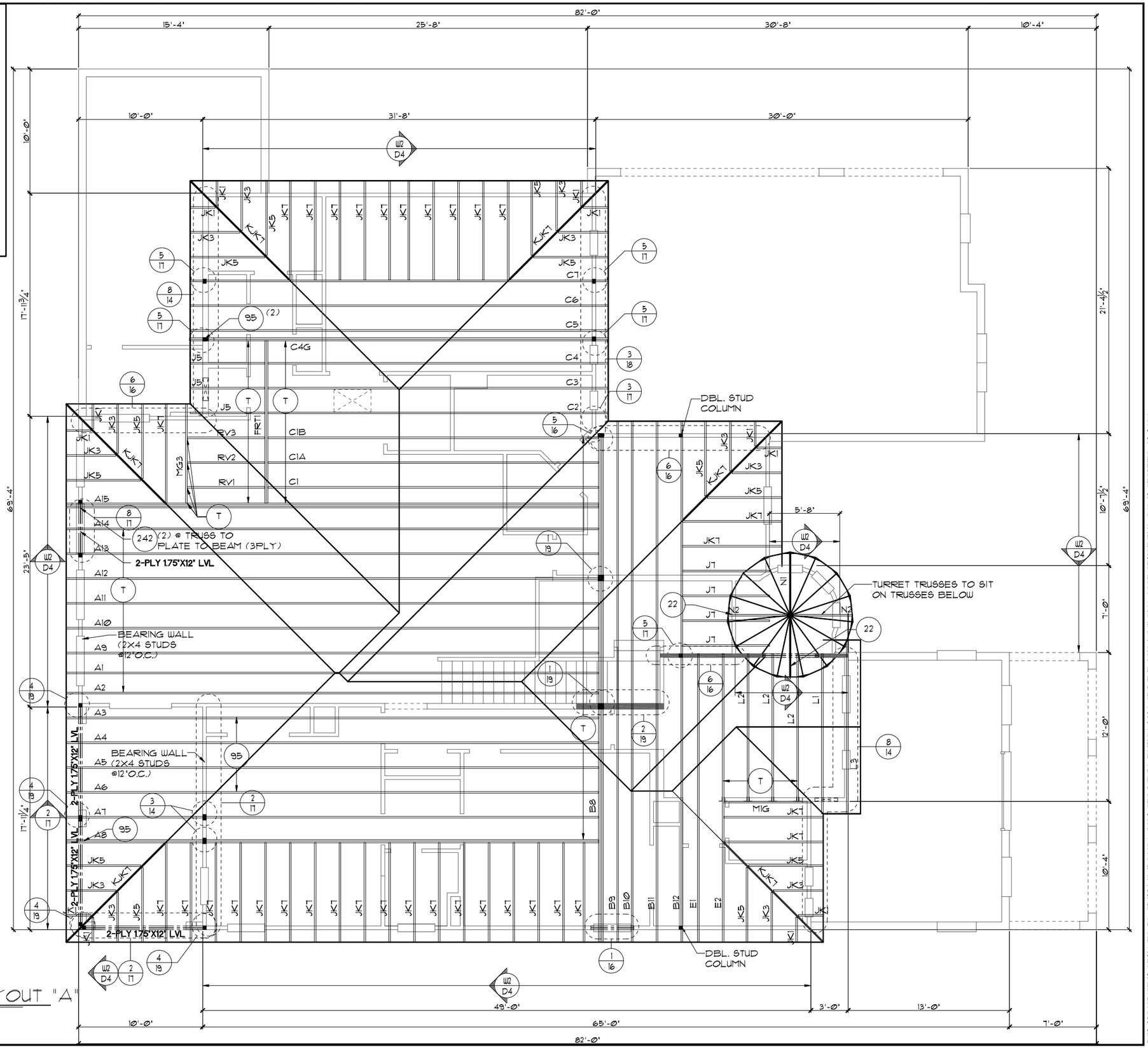

UPPER FLOOR TRUSS LAYOUT "A"

1/8"=1'-0" (11X17) 1/4"=1'-0" (22X34)

THIS STRUCTURE IS DESIGNED TO WITHSTAND 150 MPH WINDS PER THE 7th EDITION, 2020 OF THE FLORIDA BUILDING CODE RESIDENTIAL AND IS CERTIFIED AS SUCH

LOT SPECIFIC INFORMATION

© COPYRIGHT 2012
Park Square Homes hereby reserves its common law copyrights and other copyrights in these plans, ideas, and design. These plans, ideas and designs are not to be copied or changed in any manner or form whatsoever, nor are they to be assigned to any third party without first obtaining the express written permission from Park Square Homes.

SIGNATURE SERIES

REVISIONS	BY
05-29-20	RDC

Engineering By:
DBE and C
MICHAEL A. THOMPSON
PE 47509
PHONE 407-721-2292

A DIVISION OF PARK SQUARE ENTERPRISES, INC.
5200 Vineland Road, Suite 200
Orlando, Florida 32811
Phone: (407) 529 - 3000

Park Square HOMES

LAYOUT

UPPER FLOOR TRUSS LAYOUT

5803T-SIDE LOAD

THE CARRARA II

DATE	09-01-14
SCALE	AS NOTED
DRAWN	RDC
JOB	N/A
SHEET	12A.1
OF	SHEETS

ATTIC VENTILATION CALCULATIONS

PER FBC2020 7TH EDITION R806: MIN. 40% - MAX. 50% OF REQUIRED VENTILATION TO BE IN UPPER PORTION OF ATTIC SPACE AND THE BALANCE TO BE IN LOWER PORTION (EAVES).

THE MINIMUM NET VENTILATION AREA SHALL BE 1/150 OF VENTED SPACE:

TOTAL VENTED SPACE: 3,829 S.F. / 300 = 12.76 S.F. NET FREE VENT. REQUIRED

UPPER PORTION VENTILATION TOTAL:------- 5.82 S.F.
PROVIDED W/OFF RIDGE VENTS: 6 VENTS @.975 S.F. /VENT.
(VENT TYPE: O'HAGIN MODEL 'S')

LOWER PORTION VENTILATION TOTAL:------- 10.32 S.F.
PROVIDED W/ VENTILATED SOFFITS @ EAVE:
(118.66 S.F.@ .087 S.F. VENTING PER L.F.)

UPPER PORTION PERCENTAGE: 45%
LOWER PORTION PERCENTAGE: 62%

NOTES

1. TYPICAL ROOF GABLE OVERHANG TO BE 12" UNLESS OTHERWISE NOTED.
2. TYPICAL ROOF EAVES OVERHANG TO BE 12" UNLESS OTHERWISE NOTED.
3. PROVIDE AND INSTALL FLASHING AND ROOFING AS PER NATIONAL ROOFING AND SHEET METAL ASSOC. STANDARDS AND/ OR ACCEPTABLE INDUSTRY PRACTICE AND IN ACCORDANCE WITH THE 7TH EDITION (2020) FLORIDA RESIDENTIAL CODE.
4. ALL ROOF TRUSSES, GIRDERS, BEAMS, HEADERS, ETC. TO BE SIZED BY TRUSS MANUFACTURER OR FL. REG. ENG.
5. TRUSSES SHALL BE BRACED TO PREVENT ROTATION & PROVIDE LATERAL STABILITY IN ACCORDANCE WITH THE REQUIREMENTS SPECIFIED IN THE CONSTRUCTION DOCUMENTS FOR BUILDING & ON THE INDIVIDUAL TRUSS DESIGN DRAWINGS. IN THE ABSENCE OF SPECIFIC BRACING REQUIREMENTS, TRUSSES SHALL BE BRACED IN ACCORDANCE WITH TPI/WTCA BCSI 1.
6. REFER TO TRUSS MANUFACTURER'S DRAWINGS FOR TRUSS PLACEMENT & TRUSS TO TRUSS CONNECTIONS.
7. TILE ROOF: UNDERLAYMENT TO BE INSTALLED IAW FBCR 2020, 7TH EDITION R905.3.3. Underlayment materials required to comply with ASTM D226, D1970, D4869 and D6757 shall bear a label indicating compliance to the standard designation and, if applicable, type classification indicated in Table R905.1.1. Underlayment shall be applied and attached in accordance with Table R905.1.1.
8. OFF RIDGE VENTS MAXIMUN OPENING SIZES :
   - O-HAGIN - 7" X 19" HOLE

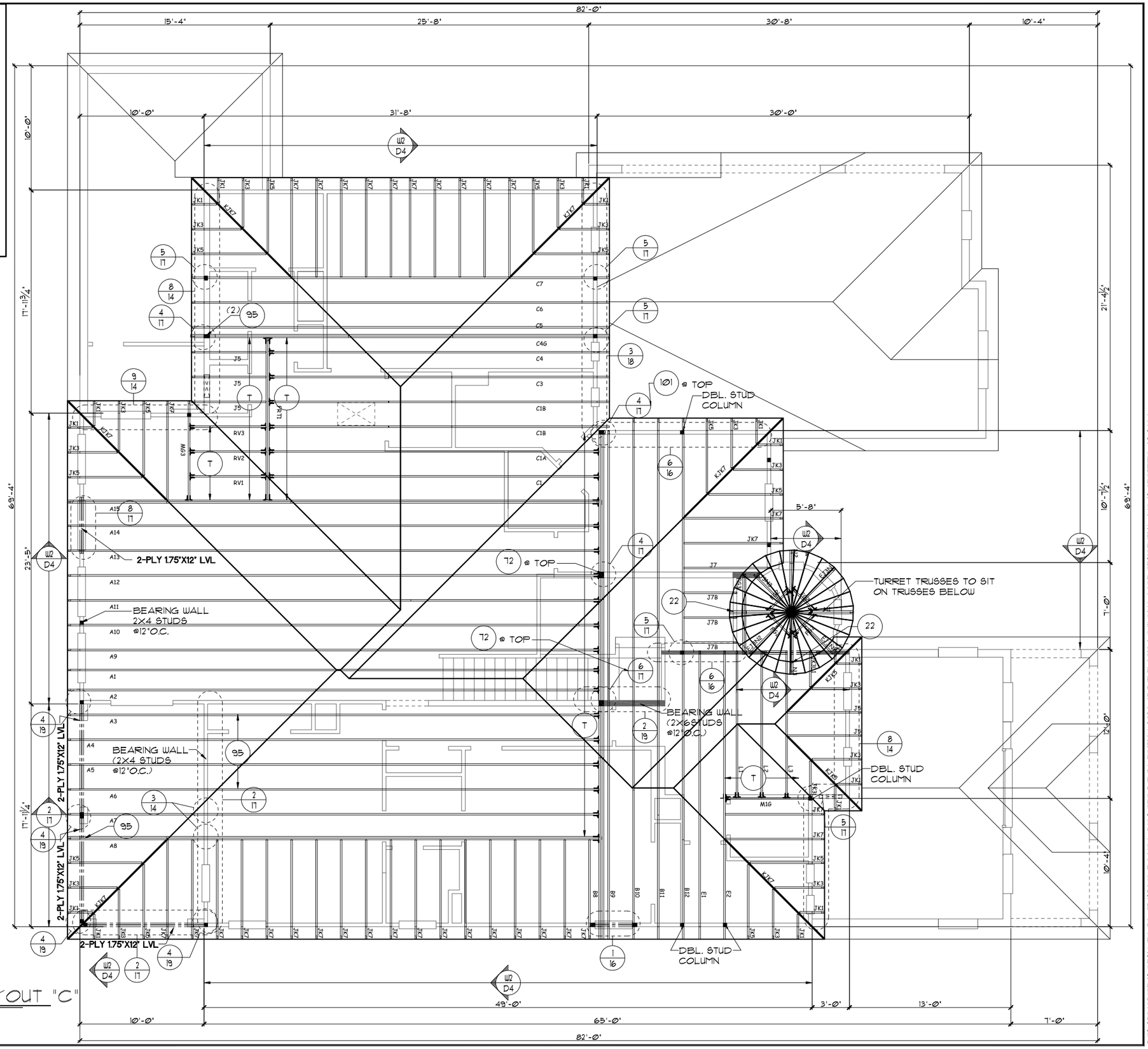

UPPER FLOOR TRUSS LAYOUT "C"

1/8"=1'-0" (11X17) 1/4"=1'-0" (22X34)

THIS STRUCTURE IS DESIGNED TO WITHSTAND 150 MPH WINDS PER THE 7th EDITION, 2020 OF THE FLORIDA BUILDING CODE RESIDENTIAL AND IS CERTIFIED AS SUCH

LOT SPECIFIC INFORMATION

© COPYRIGHT 2012
These plans, ideas, and design: These plans, ideas and designs are not to be copied or changed in any manner or form whatsoever, nor are they to be assigned to any third party without first obtaining the express written permission from Park Square Homes.

REVISIONS	BY
05-29-20	RDC

SIGNATURE SERIES

Engineering By:
DBE and C
MICHAEL A. THOMPSON
PE 47509
PHONE 407-721-2292

A DIVISION OF PARK SQUARE ENTERPRISES, INC.
5200 Vineland Road, Suite 200
Orlando, Florida 32811
Phone: (407) 529 - 3000

Park Square HOMES

UPPER FLOOR TRUSS LAYOUT

5803T-SIDE LOAD

THE CARRARA II

DATE	09-01-14
SCALE	AS NOTED
DRAWN	RDC
JOB	N/A
SHEET	12C.1
OF	SHEETS

ATTIC VENTILATION CALCULATIONS

PER FBC2020 7TH EDITION R806: MIN. 40% - MAX. 50% OF REQUIRED VENTILATION TO BE IN UPPER PORTION OF ATTIC SPACE AND THE BALANCE TO BE IN LOWER PORTION (EAVES).

THE MINIMUM NET VENTILATION AREA SHALL BE 1/150 OF VENTED SPACE:

TOTAL VENTED SPACE: 3,829 S.F. / 300 = 12.76 S.F. NET FREE VENT. REQUIRED

UPPER PORTION VENTILATION TOTAL:------- 5.82 S.F.
PROVIDED W/OFF RIDGE VENTS: 6 VENTS @.975 S.F. /VENT.
(VENT TYPE: O'HAGIN MODEL 'S')

LOWER PORTION VENTILATION TOTAL:------- 10.32 S.F.
PROVIDED W/ VENTILATED SOFFITS @ EAVE:
(118.66 S.F.@ .087 S.F. VENTING PER L.F.)

UPPER PORTION PERCENTAGE: 45%
LOWER PORTION PERCENTAGE: 62%

NOTES

1. TYPICAL ROOF GABLE OVERHANG TO BE 12" UNLESS OTHERWISE NOTED.
2. TYPICAL ROOF EAVES OVERHANG TO BE 12" UNLESS OTHERWISE NOTED.
3. PROVIDE AND INSTALL FLASHING AND ROOFING AS PER NATIONAL ROOFING AND SHEET METAL ASSOC. STANDARDS AND/ OR ACCEPTABLE INDUSTRY PRACTICE AND IN ACCORDANCE WITH THE 7TH EDITION (2020) FLORIDA RESIDENTIAL CODE.
4. ALL ROOF TRUSSES, GIRDERS, BEAMS, HEADERS, ETC. TO BE SIZED BY TRUSS MANUFACTURER OR FL. REG. ENG.
5. TRUSSES SHALL BE BRACED TO PREVENT ROTATION & PROVIDE LATERAL STABILITY IN ACCORDANCE WITH THE REQUIREMENTS SPECIFIED IN THE CONSTRUCTION DOCUMENTS FOR BUILDING & ON THE INDIVIDUAL TRUSS DESIGN DRAWINGS. IN THE ABSENCE OF SPECIFIC BRACING REQUIREMENTS, TRUSSES SHALL BE BRACED IN ACCORDANCE WITH TPI/WTCA BCSI 1.
6. REFER TO TRUSS MANUFACTURER'S DRAWINGS FOR TRUSS PLACEMENT & TRUSS TO TRUSS CONNECTIONS.
7. TILE ROOF: UNDERLAYMENT TO BE INSTALLED IAW FBCR 2020, 7TH EDITION R905.3.3. Underlayment materials required to comply with ASTM D226, D1970, D4869 and D6757 shall bear a label indicating compliance to the standard designation and, if applicable, type classification indicated in Table R905.1.1. Underlayment shall be applied and attached in accordance with Table R905.1.1.
8. OFF RIDGE VENTS MAXIMUN OPENING SIZES :
   - O-HAGIN - 7" X 19" HOLE

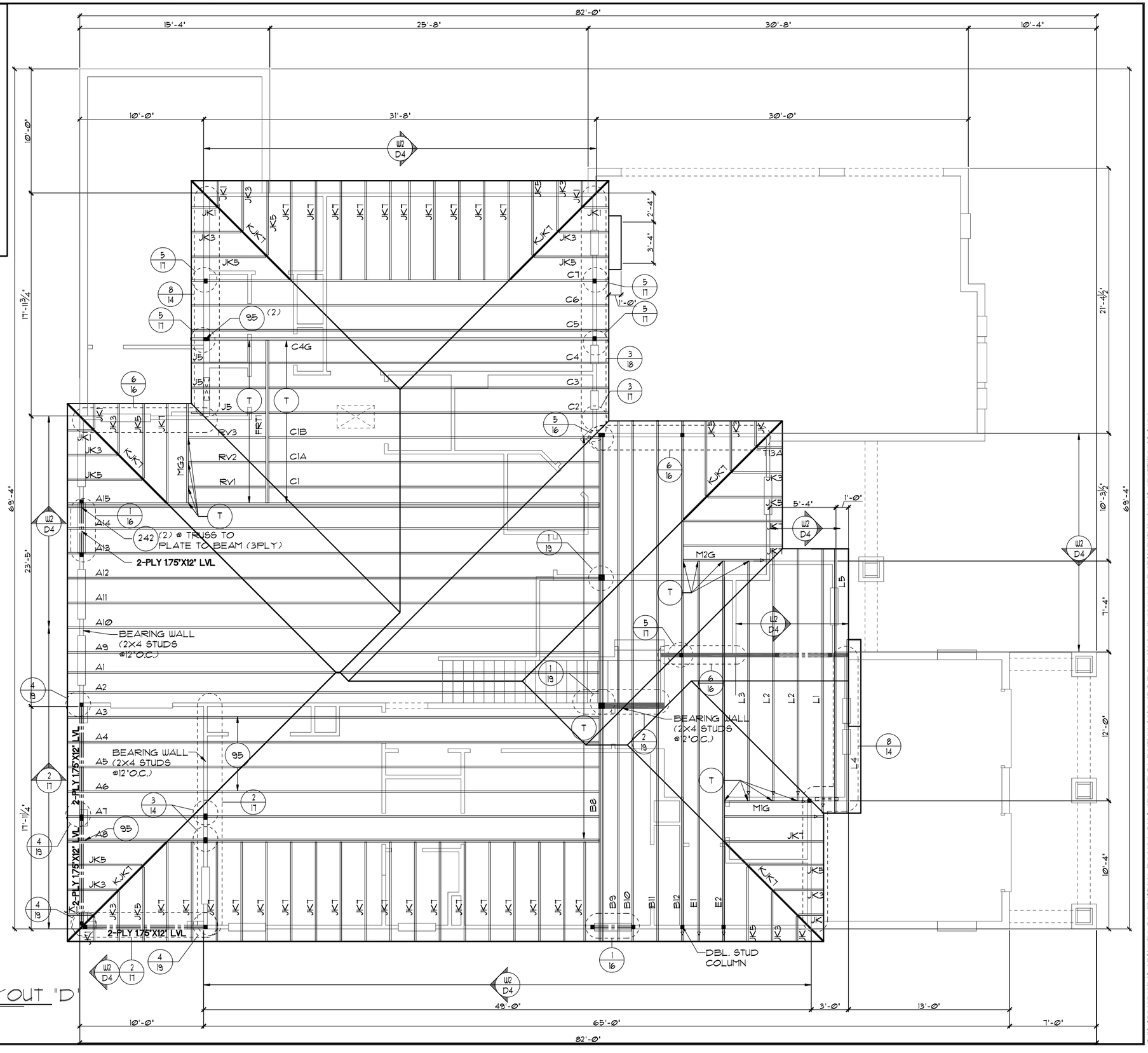

UPPER FLOOR TRUSS LAYOUT "D"

1/8"=1'-0" (11X17) 1/4"=1'-0" (22X34)

THIS STRUCTURE IS DESIGNED TO WITHSTAND 150 MPH WINDS PER THE 7th EDITION, 2020 OF THE FLORIDA BUILDING CODE RESIDENTIAL AND IS CERTIFIED AS SUCH

LOT SPECIFIC INFORMATION

© COPYRIGHT 2012
Park Square Homes hereby reserves its common law copyrights and other copyrights in these plans, ideas, and design. These plans, ideas and designs are not to be copied or changed in any manner or form whatsoever, nor are they to be assigned to any third party without first obtaining the express written permission from Park Square Homes.

SIGNATURE SERIES

REVISIONS	BY
05-29-20	RDC

Engineering By:
DBE and C
MICHAEL A. THOMPSON
PE 47509
PHONE 407-721-2292

A DIVISION OF PARK SQUARE ENTERPRISES, INC.
5200 Vineland Road, Suite 200
Orlando, Florida 32811
Phone: (407) 529 - 3000

Park Square HOMES

UPPER FLOOR TRUSS LAYOUT

5803T-SIDE LOAD
THE CARRARA II

DATE	09-01-14
SCALE	AS NOTED
DRAWN	RDC
JOB	N/A
SHEET	12D.1
OF	SHEETS

ATTIC VENTILATION CALCULATIONS

PER FBC2020 7TH EDITION R806: MIN. 40% - MAX. 50% OF REQUIRED VENTILATION TO BE IN UPPER PORTION OF ATTIC SPACE AND THE BALANCE TO BE IN LOWER PORTION (EAVES).

THE MINIMUM NET VENTILATION AREA SHALL BE 1/150 OF VENTED SPACE:

TOTAL VENTED SPACE: 3,829 S.F. / 300 = 12.76 S.F. NET FREE VENT. REQUIRED

UPPER PORTION VENTILATION TOTAL:------- 5.82 S.F.
PROVIDED W/OFF RIDGE VENTS: 6 VENTS @.975 S.F. /VENT.
(VENT TYPE: O'HAGIN MODEL 'S')

LOWER PORTION VENTILATION TOTAL:------- 10.32 S.F.
PROVIDED W/ VENTILATED SOFFITS @ EAVE:
(118.66 S.F.@ .087 S.F. VENTING PER L.F.)

UPPER PORTION PERCENTAGE: 45%
LOWER PORTION PERCENTAGE: 62%

NOTES

1. TYPICAL ROOF GABLE OVERHANG TO BE 12" UNLESS OTHERWISE NOTED.
2. TYPICAL ROOF EAVES OVERHANG TO BE 12" UNLESS OTHERWISE NOTED.
3. PROVIDE AND INSTALL FLASHING AND ROOFING AS PER NATIONAL ROOFING AND SHEET METAL ASSOC. STANDARDS AND/ OR ACCEPTABLE INDUSTRY PRACTICE AND IN ACCORDANCE WITH THE 7TH EDITION (2020) FLORIDA RESIDENTIAL CODE.
4. ALL ROOF TRUSSES, GIRDERS, BEAMS, HEADERS, ETC. TO BE SIZED BY TRUSS MANUFACTURER OR FL. REG. ENG.
5. TRUSSES SHALL BE BRACED TO PREVENT ROTATION & PROVIDE LATERAL STABILITY IN ACCORDANCE WITH THE REQUIREMENTS SPECIFIED IN THE CONSTRUCTION DOCUMENTS FOR BUILDING & ON THE INDIVIDUAL TRUSS DESIGN DRAWINGS. IN THE ABSENCE OF SPECIFIC BRACING REQUIREMENTS, TRUSSES SHALL BE BRACED IN ACCORDANCE WITH TPI/WTCA BCSI 1.
6. REFER TO TRUSS MANUFACTURER'S DRAWINGS FOR TRUSS PLACEMENT & TRUSS TO TRUSS CONNECTIONS.
7. TILE ROOF: UNDERLAYMENT TO BE INSTALLED IAW FBCR 2020, 7TH EDITION R905.3.3. Underlayment materials required to comply with ASTM D226, D1970, D4869 and D6757 shall bear a label indicating compliance to the standard designation and, if applicable, type classification indicated in Table R905.1.1. Underlayment shall be applied and attached in accordance with Table R905.1.1.
8. OFF RIDGE VENTS MAXIMUN OPENING SIZES :
   - O-HAGIN - 7" X 19" HOLE

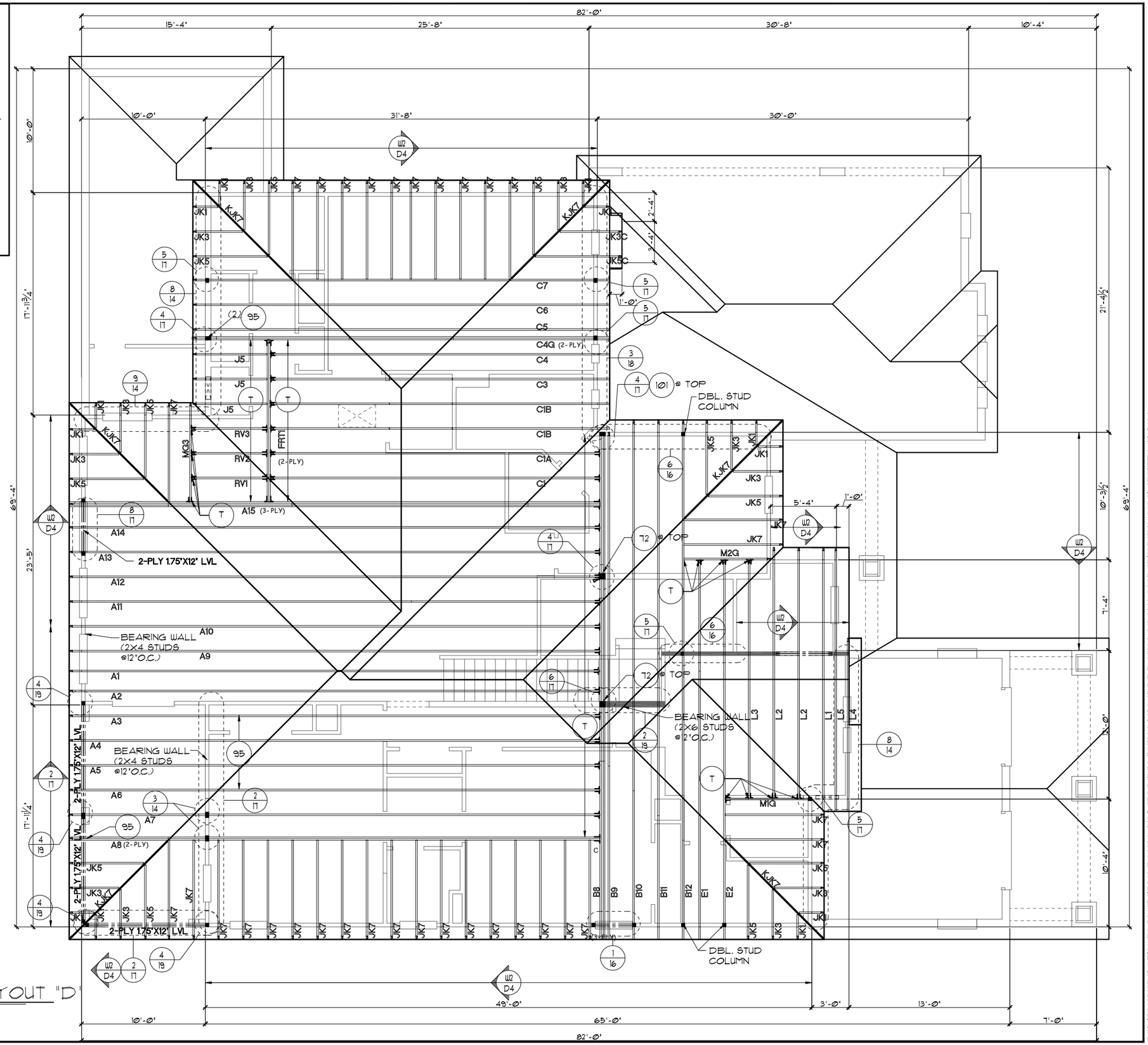

UPPER FLOOR TRUSS LAYOUT "D"

1/8"=1'-0" (11X17) 1/4"=1'-0" (22X34)

THIS STRUCTURE IS DESIGNED TO WITHSTAND 150 MPH WINDS PER THE 7th EDITION, 2020 OF THE FLORIDA BUILDING CODE RESIDENTIAL AND IS CERTIFIED AS SUCH

LOT SPECIFIC INFORMATION

© COPYRIGHT 2012 Park Square Homes hereby reserves its common law copyrights and other copyrights in these plans, ideas, and design. These plans, ideas and designs are not to be copied or changed in any manner or form whatsoever, nor are they to be assigned to any third party without first obtaining the express written permission from Park Square Homes.

SIGNATURE SERIES

REVISIONS	BY
05-29-20	RDC

Engineering By:
DBE and C
MICHAEL A. THOMPSON
PE 47509
PHONE 407-721-2292

A DIVISION OF PARK SQUARE ENTERPRISES, INC.
5200 Vineland Road, Suite 200
Orlando, Florida 32811
Phone: (407) 529 - 3000

Park Square HOMES

LAYOUT

5803T-SIDE LOAD

THE CARRARA II

UPPER FLOOR TRUSS LAYOUT

DATE	09-01-14
SCALE	AS NOTED
DRAWN	RDC
JOB	N/A
SHEET	12D.1
OF	SHEETS

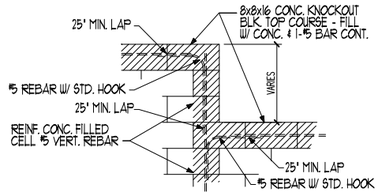

BLOCK WALL HT. TRANSITION DETAIL

CAST CRETE / LOTT'S / WEKIWA
LINTEL SCHEDULE

LINTEL NO.	LENGTH	TYPE	COMMENTS
L-1	6'-0"	8F36-0B/IT	PR. SH1H6
L-2	5'-4"	8F36-0B/IT	(2) 1/6X1/6 CLR. F.G.
L-3	9'-4"	8F64-1B/IT	GARAGE DOOR
L-4	17'-4"	8F64-1B/IT	GARAGE DOOR
L-5			
L-6			
L-7	7'-6"	8F8-0B/IT	PR. SH25
L-8	7'-6"	8F16-0B/IT	(2)3/2X2/0 F.G.
L-9	4'-6"	8RF44-0B/IT	2680 1-LITE DR.
L-10	10'-10"	8F16-0B/IT	(3)3/2X2/0 F.G.
L-11	10'-10"	8F8-0B/IT	(3) SH25
L-12	4'-6"	8F8-0B/IT	SH25
L-13	4'-6"	8RF44-0B/IT	2680 1-LITE DR.
L-14	4'-6"	8F16-0B/IT	3/2X2/0 F.G.
L-15	4'-6"	8F48-0B/IT	SH25
L-16			
L-17			
L-18	15'-4"	8F16-1B/IT	REAR LANAI
L-19	14'-8"	8F16-1B/IT	REAR LANAI
L-20	10'-6"	8F16-1B/IT	REAR LANAI
L-21	4'-6"	8F48-0B/IT	SH25
L-22	6'-6"	8F48-0B/IT	5/0X2/0 F.G.
L-23	4'-6"	8F36-0B/IT	SH26
L-24	4'-6"	8F36-0B/IT	SH26
L-25	7'-6"	8RF44-0B/IT	PR. 3080 FRCH. DR.
L-26	4'-6"	8F36-0B/IT	SH26
L-27	7'-0"	8F24-0B/IT	FRONT PORCH
L-28	7'-0"	8F24-0B/IT	FRONT PORCH
L-29	7'-0"	8F24-0B/IT	FRONT PORCH
L-30	7'-0"	8F24-0B/IT	FRONT PORCH
L-31	7'-0"	8F24-0B/IT	FRONT PORCH
L-32	4'-6"	8F36-0B/IT	SH26
L-33	4'-6"	8F36-0B/IT	SH25
L-34	5'-10"	8RF44-0B/IT	FRONT DOOR
L-35	5'-10"	8F36-0B/IT	FRONT ENTRY (RADIUS)
L-36	3'-6"	8F36-0B/IT	SH1H6
L-37	3'-6"	8F36-0B/IT	SH1H6
L-38			
L-39			
L-40			
L-41			
L-42			
L-43			
L-44	13'-4"	8F16-1B/IT	12/0X2/0 F.G.
L-45	13'-4"	8F8-1B/IT	12/0X8/0 S.G.D.
L-46	10'-10"	8F8-1B/IT	(3) SH25
L-47	10'-10"	8F16-1B/IT	(3) 3/2X2/0 F.G.
L-48	10'-10"	8RF44-0B/IT	OPT. PR3080 1-LITE W/S.L.
L-49			
L-50			
L-51			
L-52			
L-53			
L-54			
L-55			

PRE CAST LINTEL LAYOUT "A"
1/8"=1'-0" (11X17) 1/4"=1'-0" (22X34)

THIS STRUCTURE IS DESIGNED TO WITHSTAND 150 MPH WINDS PER THE 7th EDITION, 2020 OF THE FLORIDA BUILDING CODE RESIDENTIAL AND IS CERTIFIED AS SUCH

LOT SPECIFIC INFORMATION

© COPYRIGHT 2012
Park Square Homes hereby reserves its common law copyrights and other copyrights in these plans, ideas, and design. These plans, ideas and designs are not to be copied or changed in any manner or form whatsoever, nor are they to be assigned to any third party without first obtaining the express written permission from Park Square Homes.

SIGNATURE SERIES

REVISIONS	BY
05-29-20	RDC

Engineering By:
DBE and C
MICHAEL A. THOMPSON
PE 47509
PHONE 407-721-2292

A DIVISION OF PARK SQUARE ENTERPRISES, INC.
5200 Vineland Road, Suite 200
Orlando, Florida 32811
Phone: (407) 529 - 3000

Park Square HOMES

PRE CAST LINTEL LAYOUT

5803T-SIDE LOAD

THE CARRARA II

DATE	09-01-14
SCALE	AS NOTED
DRAWN	RDC
JOB	N/A
SHEET	13A.1
OF	SHEETS

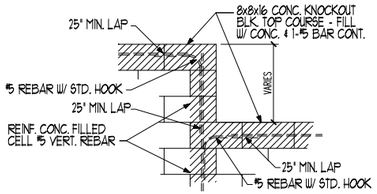

BLOCK WALL HT. TRANSITION DETAIL

CAST CRETE / LOTT'S / WEKIWA
LINTEL SCHEDULE

LINTEL NO.	LENGTH	TYPE	COMMENTS
L-1	6'-6"	8F32-0B/IT	9H11H4 W/ 1/2 RND. F.G.
L-2	3'-6"	8F36-0B/IT	9H11H4
L-3	9'-4"	8F64-1B/IT	GARAGE DOOR
L-4	17'-4"	8F64-1B/IT	GARAGE DOOR
L-5			
L-6			
L-7	7'-6"	8F8-0B/IT	PR. 9H25
L-8	7'-6"	8F16-0B/IT	(2)3/2X2/0 F.G.
L-9	4'-6"	8RF44-0B/IT	2680 1-LITE DR.
L-10	10'-10"	8F16-0B/IT	(3)3/2X2/0 F.G.
L-11	10'-10"	8F8-0B/IT	(3) 9H25
L-12	4'-6"	8F8-0B/IT	9H25
L-13	4'-6"	8RF44-0B/IT	2680 1-LITE DR.
L-14	4'-6"	8F16-0B/IT	3/2X2/0 F.G.
L-15	4'-6"	8F48-0B/IT	9H25
L-16			
L-17			
L-18	15'-4"	8F16-1B/IT	REAR LANAI
L-19	14'-8"	8F16-1B/IT	REAR LANAI
L-20	10'-6"	8F16-1B/IT	REAR LANAI
L-21	4'-6"	8F48-0B/IT	9H25
L-22	6'-6"	8F48-0B/IT	5/0X2/0 F.G.
L-23	4'-6"	8F36-0B/IT	9H26
L-24	4'-6"	8F36-0B/IT	9H26
L-25	7'-6"	8RF44-0B/IT	PR. 3080 FRCH. DR.
L-26	4'-6"	8F36-0B/IT	9H26
L-27	7'-0"	8F24-0B/IT	FRONT PORCH
L-28	7'-0"	8F24-0B/IT	FRONT PORCH
L-29	7'-0"	8F24-0B/IT	FRONT PORCH
L-30	7'-0"	8F24-0B/IT	FRONT PORCH
L-31	7'-0"	8F24-0B/IT	FRONT PORCH
L-32	4'-6"	8F36-0B/IT	9H26
L-33	4'-6"	8F48-0B/IT	9H25
L-34	5'-10"	8RF44-0B/IT	FRONT DOOR
L-35	5'-10"	8F36-0B/IT	FRONT ENTRY (RADIUS)
L-36	3'-6"	8F36-0B/IT	9H11H6
L-37	3'-6"	8F36-0B/IT	9H11H6
L-38			
L-39			
L-40			
L-41			
L-42			
L-43			
L-44	13'-4"	8F16-1B/IT	12/0X2/0 F.G.
L-45	13'-4"	8F8-1B/IT	12/0X8/0 S.G.D.
L-46	10'-10"	8F8-1B/IT	(3) 9H25
L-47	10'-10"	8F16-1B/IT	(3) 3/2X2/0 F.G.
L-48	10'-10"	8RF44-0B/IT	OPT. PR3080 1-LITE W/S.L.
L-49			
L-50			
L-51			
L-52			
L-53			
L-54			
L-55			

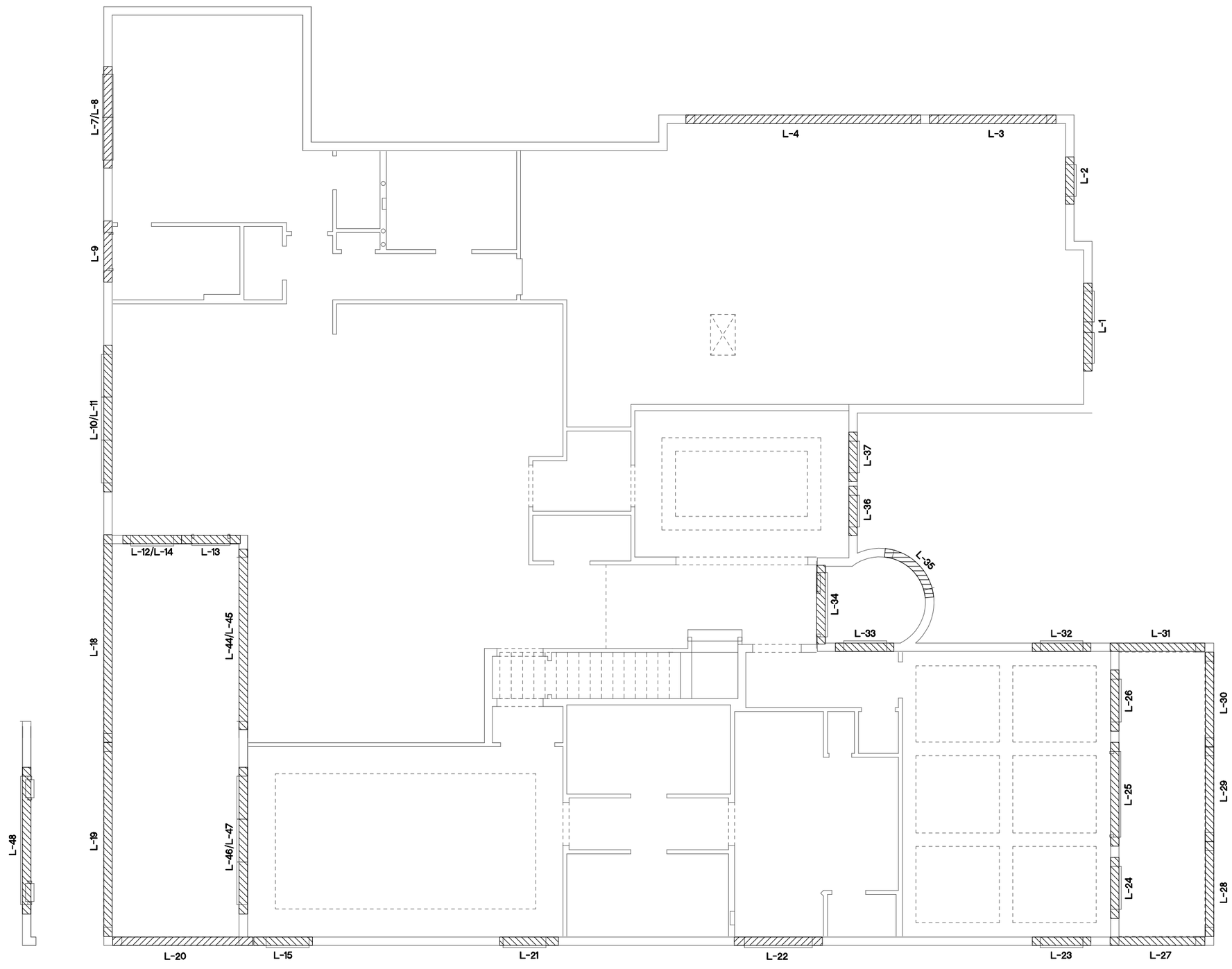

PRE CAST LINTEL LAYOUT "C"

1/8"=1'-0" (11X17) 1/4"=1'-0" (22X34)

THIS STRUCTURE IS DESIGNED TO WITHSTAND 150 MPH WINDS PER THE 7th EDITION, 2020 OF THE FLORIDA BUILDING CODE RESIDENTIAL AND IS CERTIFIED AS SUCH

LOT SPECIFIC INFORMATION

SIGNATURE SERIES

© COPYRIGHT 2012
Park Square Homes hereby reserves its common law copyrights and other copyrights in these plans, ideas, and design. These plans, ideas and designs are not to be copied or changed in any manner or form whatsoever, nor are they to be assigned to any third party without first obtaining the express written permission from Park Square Homes.

REVISIONS	BY
05-29-20	RDC

Engineering By:
DBE and C
MICHAEL A. THOMPSON
PE 47509
PHONE 407-721-2292

A DIVISION OF PARK SQUARE ENTERPRISES, INC.
5200 Vineland Road, Suite 200
Orlando, Florida 32811
Phone: (407) 529 - 3000

Park Square HOMES

PRE CAST LINTEL LAYOUT

5803T-SIDE LOAD

THE CARRARA II

DATE	09-01-14
SCALE	AS NOTED
DRAWN	RDC
JOB	N/A
SHEET	13C.1
OF	SHEETS

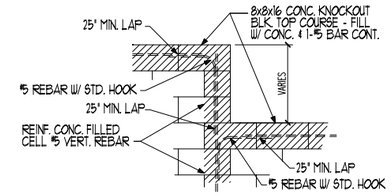

BLOCK WALL HT. TRANSITION DETAIL

CAST CRETE / LOTT'S / WEKIWA
LINTEL SCHEDULE

LINTEL NO.	LENGTH	TYPE	COMMENTS
L-1	9'-0"	8F36-0B/IT	5H11H4/5H25/5H11H4
L-2	3'-6"	8F36-0B/IT	5H11H4
L-3	9'-4"	8F64-1B/IT	GARAGE DOOR
L-4	17'-4"	8F64-1B/IT	GARAGE DOOR
L-5			
L-6			
L-7	7'-6"	8F8-0B/IT	PR. 5H25
L-8	7'-6"	8F16-0B/IT	(2)3/2X2/0 F.G.
L-9	4'-6"	8RF44-0B/IT	2680 1-LITE DR.
L-10	10'-10"	8F16-0B/IT	(3)3/2X2/0 F.G.
L-11	10'-10"	8F8-0B/IT	(3) 5H25
L-12	4'-6"	8F8-0B/IT	5H25
L-13	4'-6"	8RF44-0B/IT	2680 1-LITE DR.
L-14	4'-6"	8F16-0B/IT	3/2X2/0 F.G.
L-15	4'-6"	8F48-0B/IT	5H25
L-16			
L-17			
L-18	15'-4"	8F16-1B/IT	REAR LANAI
L-19	14'-8"	8F16-1B/IT	REAR LANAI
L-20	10'-6"	8F16-1B/IT	REAR LANAI
L-21	4'-6"	8F48-0B/IT	5H25
L-22	6'-6"	8F48-0B/IT	5/0X2/0 F.G.
L-23	4'-6"	8F36-0B/IT	5H26
L-24	7'-6"	8RF44-0B/IT	PR. 3080 FRCH. DR.
L-25	7'-6"	8RF44-0B/IT	PR. 3080 FRCH. DR.
L-26	7'-6	8F18-1B/IT	FRONT PORCH
L-27	11'-0"	8F18-1B/IT	FRONT PORCH
L-28			
L-29			
L-30			
L-31			
L-32	4'-6"	8F36-0B/IT	5H26
L-33	4'-6"	8F36-0B/IT	5H25
L-34	5'-10"	8RF44-0B/IT	FRONT DOOR
L-35			
L-36	6'-6"	8F36-0B/IT	(2) 5H11H6
L-37			
L-38			
L-39			
L-40			
L-41			
L-42			
L-43			
L-44	13'-4"	8F16-1B/IT	12/0X2/0 F.G.
L-45	13'-4"	8F8-1B/IT	12/0X8/0 S.G.D.
L-46	10'-10"	8F8-1B/IT	(3) 5H25
L-47	10'-10"	8F16-1B/IT	(3) 3/2X2/0 F.G.
L-48	10'-10"	8RF44-0B/IT	OPT. PR3080 1-LITE W/S.L.
L-49			
L-50			
L-51			
L-52			
L-53			
L-54			
L-55			

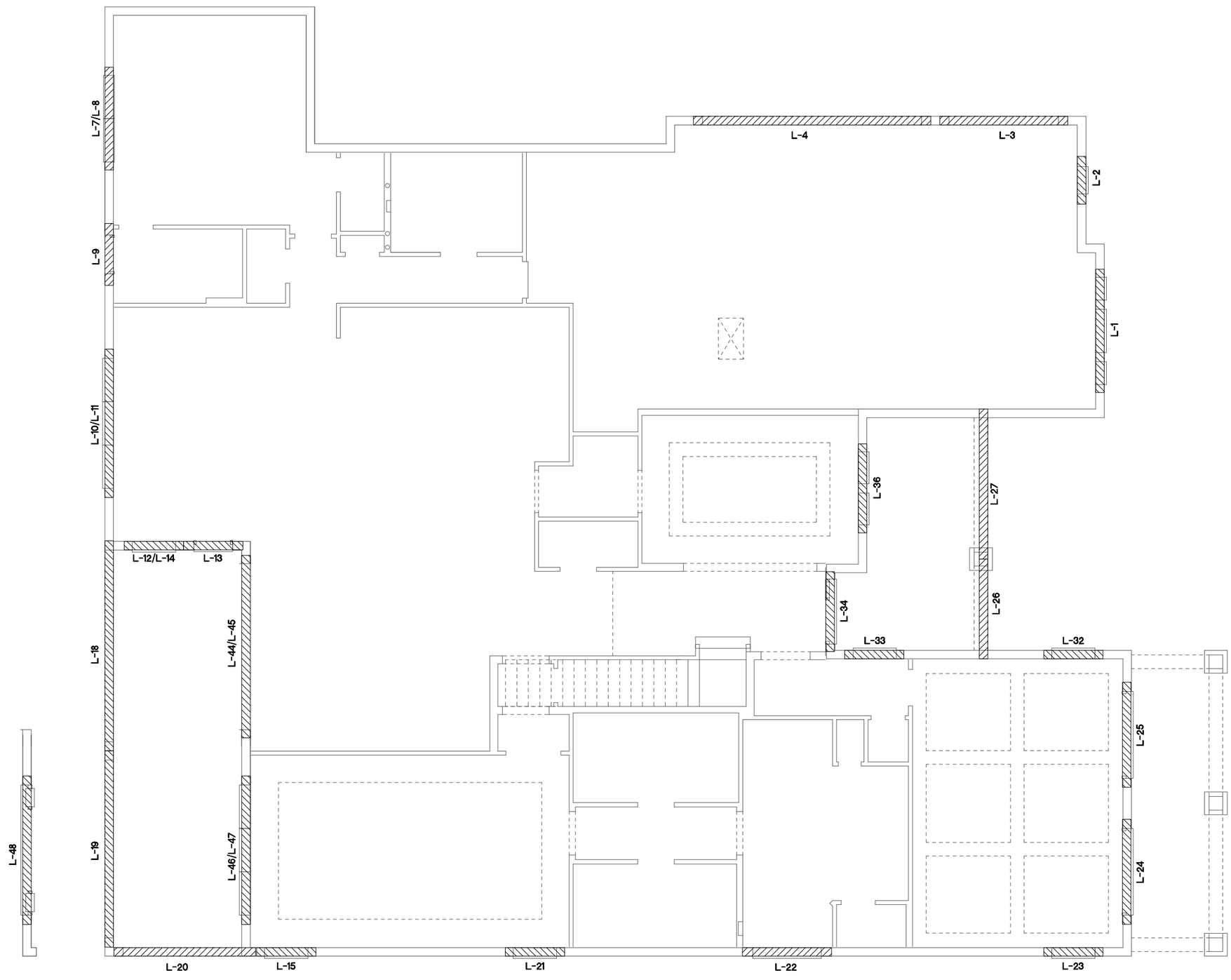

PRE CAST LINTEL LAYOUT "D"
1/8"=1'-0" (11X17) 1/4"=1'-0" (22X34)

THIS STRUCTURE IS DESIGNED TO WITHSTAND 150 MPH WINDS PER THE 7th EDITION, 2020 OF THE FLORIDA BUILDING CODE RESIDENTIAL AND IS CERTIFIED AS SUCH

LOT SPECIFIC INFORMATION

© COPYRIGHT 2012
Park Square Homes hereby reserves its common law copyrights and other copyrights in these plans, ideas, and design. These plans, ideas and designs are not to be copied or changed in any manner or form whatsoever, nor are they to be assigned to any third party without first obtaining the express written permission from Park Square Homes.

SIGNATURE SERIES

REVISIONS	BY
05-29-20	RDC

Engineering By:
DBE and C
MICHAEL A. THOMPSON
PE 47509
PHONE 407-721-2292

A DIVISION OF PARK SQUARE ENTERPRISES, INC.
5200 Vineland Road, Suite 200
Orlando, Florida 32811
Phone: (407) 529 - 3000

Park Square HOMES

PRE CAST LINTEL LAYOUT

5803T-SIDE LOAD

THE CARRARA II

DATE	09-01-14
SCALE	AS NOTED
DRAWN	RDC
JOB	N/A
SHEET	13D.1
OF	SHEETS

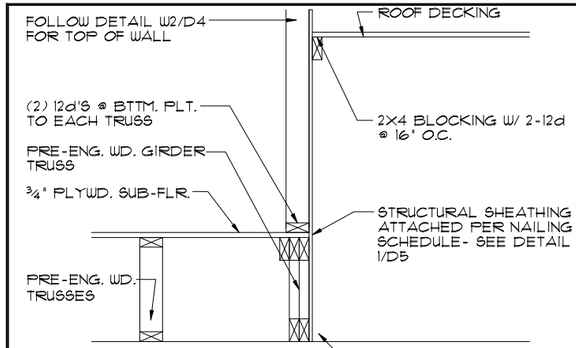

8/14 DETAIL
1/2"=1'-0" (11X17) 1"=1'-0" (22X34)

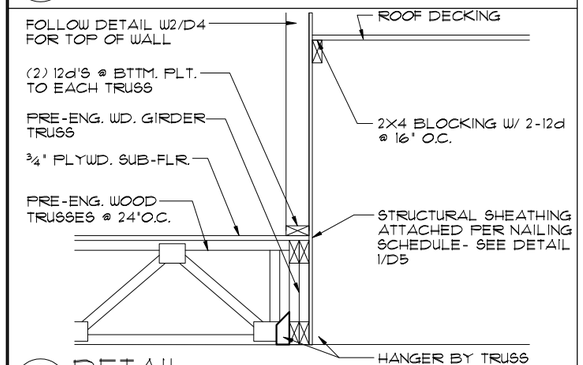

9/14 DETAIL
1/2"=1'-0" (11X17) 1"=1'-0" (22X34)

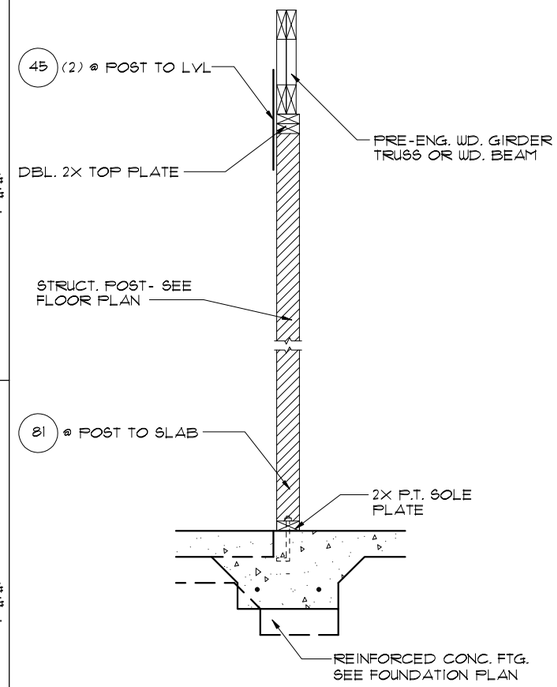

5/14 DETAIL
1/2"=1'-0" (11X17) 1"=1'-0" (22X34)

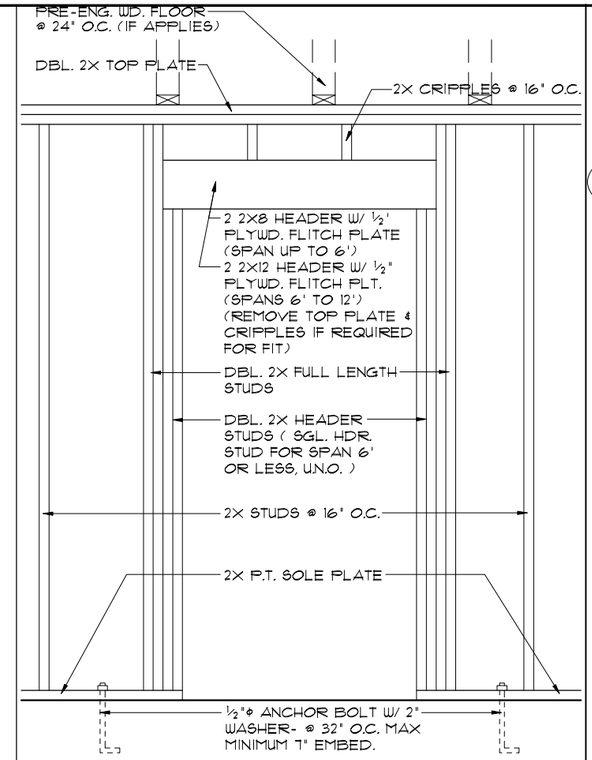

2/14 DETAIL (BRG. W/O UPLIFT)
1/2"=1'-0" (11X17) 1"=1'-0" (22X34)

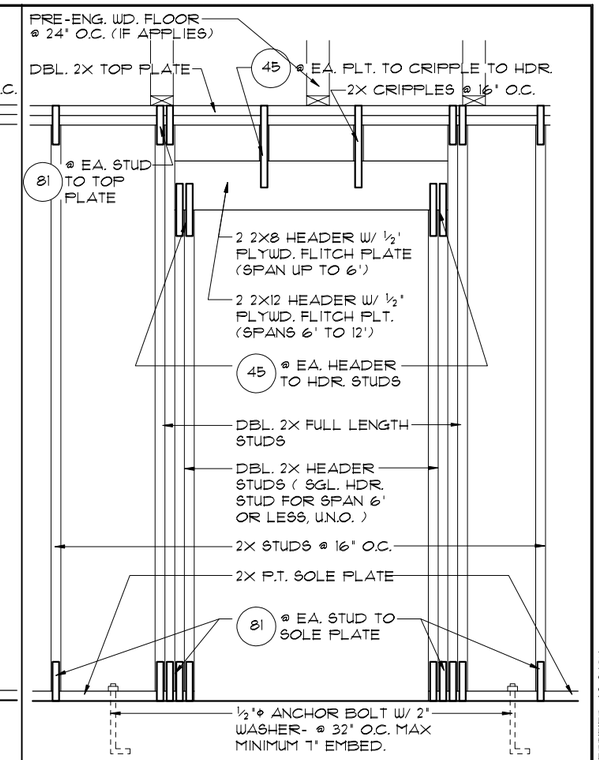

1/14 DETAIL (BRG. W/ UPLIFT)
1/2"=1'-0" (11X17) 1"=1'-0" (22X34)

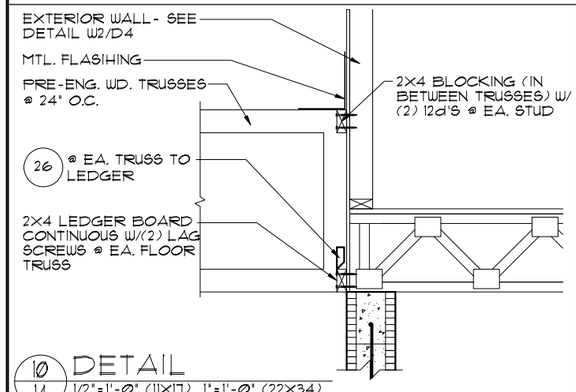

10/14 DETAIL
1/2"=1'-0" (11X17) 1"=1'-0" (22X34)

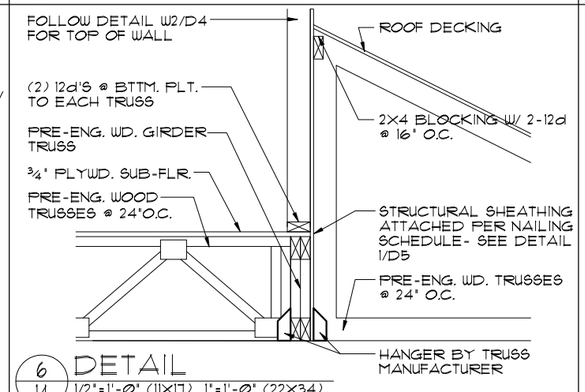

6/14 DETAIL
1/2"=1'-0" (11X17) 1"=1'-0" (22X34)

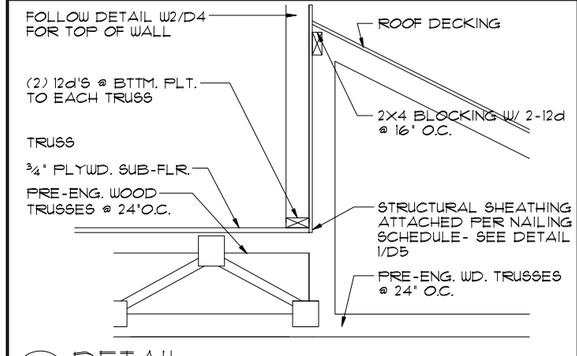

11/14 DETAIL
1/2"=1'-0" (11X17) 1"=1'-0" (22X34)

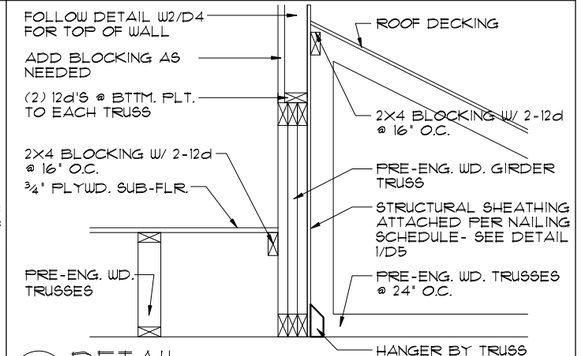

7/14 DETAIL
1/2"=1'-0" (11X17) 1"=1'-0" (22X34)

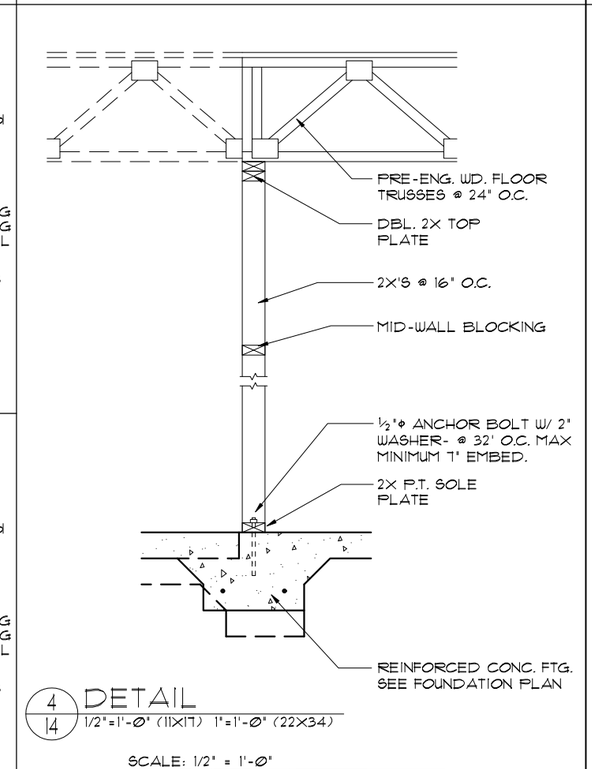

4/14 DETAIL
1/2"=1'-0" (11X17) 1"=1'-0" (22X34)

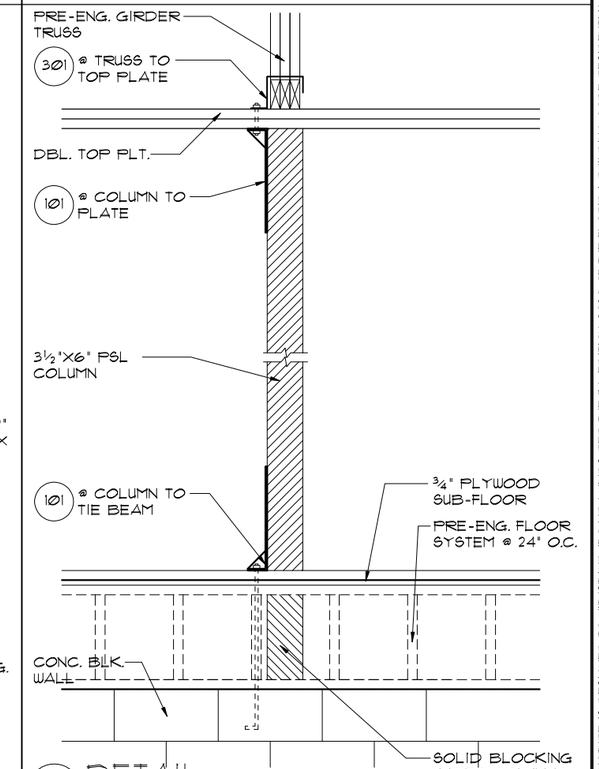

3/14 DETAIL
1/2"=1'-0" (11X17) 1"=1'-0" (22X34)

THIS STRUCTURE IS DESIGNED TO WITHSTAND 150 MPH WINDS PER THE 7th EDITION, 2020 OF THE FLORIDA BUILDING CODE RESIDENTIAL AND IS CERTIFIED AS SUCH

LOT SPECIFIC INFORMATION

© COPYRIGHT 2012
Park Square Homes hereby reserves its common law copyrights and other copyrights in these plans, ideas, and design. These plans, ideas and designs are not to be copied or changed in any manner or form whatsoever, nor are they to be assigned to any third party without first obtaining the express written permission from Park Square Homes.

SIGNATURE SERIES

REVISIONS	BY
05-29-20	RDC

Engineering By:
DBE and C
MICHAEL A. THOMPSON
PE 47509
PHONE 407-721-2292

A DIVISION OF PARK SQUARE ENTERPRISES, INC.
5200 Vineland Road, Suite 200
Orlando, Florida 32811
Phone: (407) 529 - 3000

Park Square HOMES

TYPICAL DETAILS

5803T-SIDE LOAD
THE CARRARA II

DATE	09-01-14
SCALE	AS NOTED
DRAWN	RDC
JOB	N/A
SHEET	14
OF	SHEETS

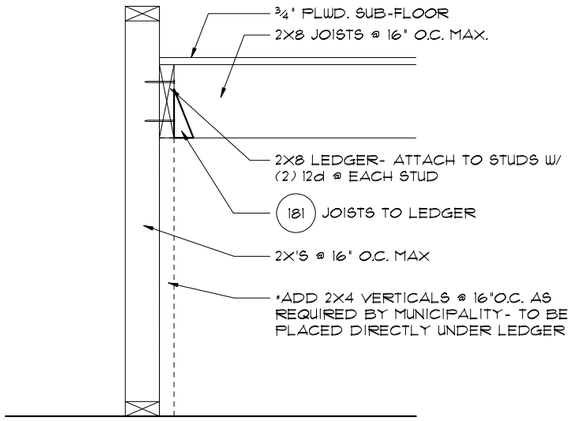

4/15 TYP. STAIR CONNECT.

3/4"= 1'-0" (11X17) 1½"= 1'-0" (22"X34") PLATFORM FRAMING

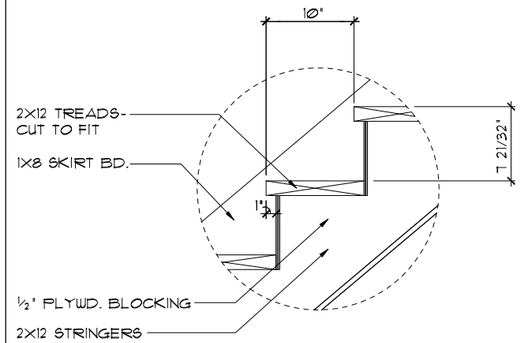

DATA: TOTAL RISE: 13'-4 ¾" (21 RISERS @ 7 21/32" EA.)
TOTAL RUN: 16'-8" (20 TREADS @ 10" EA.)

1/15 STAIR DETAIL

3/4"= 1'-0" (11X17) 1½"= 1'-0" (22"X34") STAIR DATA

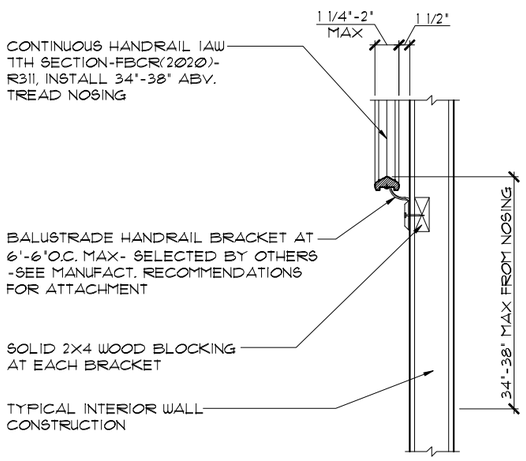

5/15 TYP. HANDRAIL DET.

3/4"= 1'-0" (11X17) 1½"= 1'-0" (22"X34")

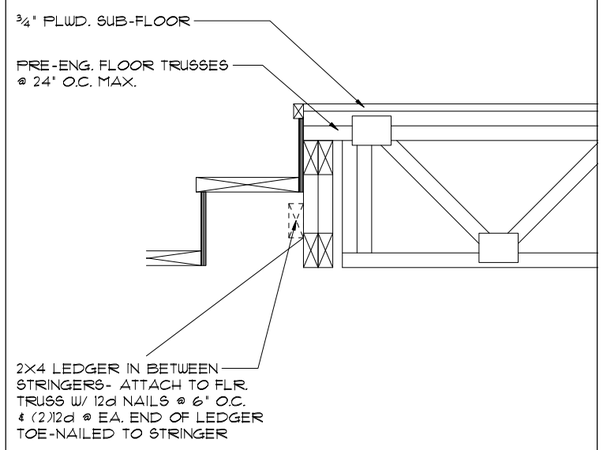

2/15 TYP. STAIR CONNECT.

3/4"=1'-0" (11X17) 1½"=1'-0" (22"X34") STRINGER TO FLOOR TRUSS

NOTES:

STAIRWAY CONSTRUCTION TO CONFORM TO FBCR 2020,7 TH EDITION SECTION R311.7

MAX. HGT. OF RISER TO BE 7¾"
MIN. WIDTH OF TREAD TO BE 9"(EXCLUSIVE OF NOSING)
ALL TREADS LESS THAN 10" IN WIDTH SHALL HAVE APPROX. 1" OF NOSING
3/16" MAX. VARIATION IN RISERS/TREADS ADJACENT TO EACH OTHER
3/8" MAX. VARIATION IN ANY RISER/TREAD

HAND RAIL CIRCULAR CROSS SECTION DIA. TO BE 1 1/4" - 2" OR TO PROVIDE EQUIVALENT GRASPABILITY.

WINDERS: MIN. 6" WIDE @ NARROW END

34"MIN.-38"MAX., HANDRAIL HGT.

HEADROOM CLEARANCE MIN. 6'-8"

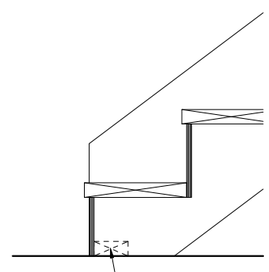

3/15 TYP. STAIR CONNECT.

3/4"= 1'-0" (11X17) 1½"= 1'-0" (22"X34") STRINGER TO FLOOR

CONNECTOR SCHEDULE

CONNECT. TYPE	SIMPSON DESCRIPTION	SIMPSON FASTENERS PER CONNECTOR	USP DESCRIPTION	USP FASTENERS PER CONNECTOR	MAX. UPLIFT	LAT. LDS. F1 / F2
4	HETA20	14-10d x 1½"	ETA20	14-10d	1,810	65 / 960
22	H10S	RFT: 8-8d x 1 1/2" PLT: 8-8d x 1 1/2"	RT16	RFT: 8-8d x 1½" PLT: 8-8d	990	585/525
23	LUS26	HDR: 4-10d/JST: 4-10d	JUS26	HDR: 4-10d/JST: 4-10d	935	N/A
24	H7	RFT / TRS: 4-8d PLT / STD: 10-8d	RT20	RFT / TRS: 9-10d PLT / STD: 13-10d	985	400 / N/A
26	H2.5	RFT:5-8d / PLT: 5-8d	RT7	RFT:5-8d / PLT: 5-8d	415	150 / 150
35	A35F	H:4-8dx1½"/P:4-8dx1½"	MPAIF	H:6-8dx1½"/P:6-8dx1½"	440	440 / N/A
37	MTS12	14-10d	MTW12	14-10d	1,000	N/A
38	MTS16	14-10d	MTW16	14-10d	1,000	N/A
39	MTSM16	BLK: (4)¼"X2¼" T.C. TRUSS: (7) 10d	MTW16	BLK: (4)¼"X2¼" T.C. TRUSS: (7) 10d	860	N/A
43	LSTA12	10-10d	LSTA12	10-10d	905	N/A
44	HGA10	RFT / 4-SDS ¼"X1½" PLT /4-SDS ¼"X3"	N/A	N/A N/A	500	840/675
45	ST18	14-16d	ST18	14-16d	1,200	N/A
47	LSTA24	18-10d	LSTA24	18-10d	1,235	N/A
71	MSTA36	26-10d	MSTA36	26-10d	2,135	N/A
72	MSTC66	64-16d SINKERS	N/A	N/A	5,495	N/A
79	SP1	STD:6-10d / PLT:4-10d	SPT22	STD:4-10d / PLT:4-10d	535	560 / 260
80	SP2	STD:6-10d / PLT:6-10d	SPT224	STD:6-10d / PLT:6-10d	605	560 / 260
81	SPH4,6,8	12-10d x 1½"	TP4,6,&8	12-10d x 1½"	885	N/A
86	ECCLL/RQ-SDS2.5	¼"X2½" STRONG DRIVE SDS H.D. CON. SCREWS	N/A	N/A	M: 2835 S: 1840	N/A
88	CBSQ88	12 SDS 1/4X2"			3975	N/A
89	CB66	(2) ⅝" BOLTS	PA8X8	4-10d	2,300	985
90	ABU66	12-16d	PAU66	12-16d	2,240	N/A
91	CBSQ66	14 SDS 1/4X2"			3,190	N/A
92	ABU44	12-16d	PAU44	12-16d	2,200	N/A
93	AC6 (MAX)	28-16d	PBS66	24-16d	1,815	1,070
94	AC4 (MAX)	28-16d	PBS44	24-16d	1,815	1,070
95	HTS20	20-10d	HTW20	20-10d	1,450	N/A
99	A35	H:4-8dx1½"/P:4-8dx1½"	MPA1	H:6-8dx1½"/P:6-8dx1½"	440	440 / N/A
101	HTT4	⅝" BOLT/ 18-16dX2½"	N/A	N/A	3,640	N/A
102	HTT5	⅝" BOLT/ 26-10d	N/A	N/A	4,275	N/A
103	VGTR/L	32-SDS¼"X3"/(2) ⅝" BLT	N/A	N/A	3,990	N/A
104	HDU8-SDS2.5	7/8" BLT/20-SDS ¼"x2½"	N/A	N/A	5,020	N/A
105	HDT5	7/8"-3-3/4"	N/A	N/A	6,645	N/A
106	HDU14-SDS2.5	36-SDS ¼"X2½"	N/A	N/A	10,770	N/A
181	HUS26	20-16d	THD26	H:20-16d/J:10-10d	1,550	N/A
184	HUC28-2	H:14-16d/J:4-10d	N/A	N/A	1,085	N/A
212	HUC410	BLOCK: 10-¼"X1½" TC JOIST : 10-16d	N/A	N/A	1,810	N/A
213	HSUR/L410	BLOCK: 20-16d JOIST : 6-16d	N/A	BLOCK: N/A JOIST : N/A	1,300	N/A
214	HUC412	BLOCK: 10-¼"X1½" TC JOIST : 10-16d	HUS412	BLOCK: 10-¼"X1½" TC JOIST : 10-16d	1,895	N/A
215	HGUS210-2	HDR:46-16d/JST:10-16d	EHUH210-2	HDR:40-16d/JST:16-10d	2,720	N/A
216	HUCS412	BLOCK: 10-¼"X1½" TC JOIST : 10-16d	HUS412	BLOCK: 10-¼"X1½" TC JOIST : 10-16d	3,240	N/A
217	HUS212-2	BLOCK: 10-¼"X1½" TC JOIST : 10-16d	HUS212-2	BLOCK: 10-¼"X1½" TC JOIST : 10-16d	2,630	N/A
219	MBHA412	H:1-ATR¾X8 TOP&FACE JOIST: 18-10d	NFM35X12U	H:1-½" J-BOLT J:5-½" BOLTS	3,145	N/A
231	MBHA3.56/16	HDR : (2) ¾"Φ x 8" JOIST : 18-10d	NFM3.5X16U	HDR :MIN. ½"ΦxJ-BOLTS JOIST : (5) ½"Φ BOLTS	3,450	N/A
232	MBHA5.50/16	HDR : (2) ¾"Φ x 8" JOIST : 18-10d	NFM5.5X16U	HDR :MIN. ½"ΦxJ-BOLTS JOIST : (5) ½"Φ BOLTS	3,450	N/A
241	LGT2	30-16d-sinker	LUGT2	32-10d	2000	1015 / 440
242	LGT3	G: (12) SDS ¼:X2½"	N/A	W: (4) ⅜"X5" TITEN	2,365	N/A
243	LGT4-SDS3	G: (16) SDS ¼:X3"	N/A	W: (4) ⅜"X5" TITEN HD	2,365	N/A
301	MGT	(1) ¾"BLTS./GIR: 22-10d	N/A	N/A	3,965	N/A
302	HGT-2 or 3	LTL:¾"BLTS./GIR: 8-10d	USC63	LTL:¾"BLTS./GIR: 8-16d	6485	N/A
303	HGT-4	LTL:¾"BLTS./GIR: 16-10d	N/A	N/A	9,250	N/A
305	FGTR (2-PLY)	TRUSS: 36 SDS ½"X3" WALL:(4)½"X5" TITEN HD	N/A	N/A	9,400	N/A
401	SUR/L414	FACE:18-16d/JST:8-16d	N/A	N/A	1,700	N/A
501A	LSU26	6-10d - 5-10dX1½	N/A	N/A	535	N/A
501B	LSSU28	10-10d - 5-10dX1½	N/A	N/A	535	N/A
501C	LSSU210	10-10d - 7-10dX1½	N/A	N/A	875	N/A
502A	LSU26	6-10d - 5-10dX1½	N/A	N/A	535	N/A
502B	LSSU28	9-10d - 5-10dX1½	N/A	N/A	450	N/A
502C	LSSU210	9-10d - 7-10dX1½	N/A	N/A	785	N/A
503	HRC22	6-10dX1½ - 2-10dX1½	N/A	N/A	290	N/A
504	VPA2	8-10d - 2-10dX1½	N/A	N/A	295	375/250
505	HCP2	6-10dX1½ - 6-10dX1½	N/A	N/A	645	N/A
T	CONNECTORS TO BE SPECIFIED AND PROVIDED BY TRUSS MANUFACTURERS					

THIS STRUCTURE IS DESIGNED TO WITHSTAND 150 MPH WINDS PER THE 7th EDITION, 2020 OF THE FLORIDA BUILDING CODE RESIDENTIAL AND IS CERTIFIED AS SUCH

LOT SPECIFIC INFORMATION

SIGNATURE SERIES

© COPYRIGHT 2012 Park Square Homes hereby reserves its common law copyrights and other copyrights in these plans, ideas, and design. These plans, ideas and designs are not to be copied or changed in any manner or form whatsoever, nor are they to be assigned to any third party without first obtaining the express written permission from Park Square Homes.

REVISIONS	BY
05-29-20	RDC

Engineering By:
DBE and C
MICHAEL A. THOMPSON
PE 47509
PHONE 407-721-2292

A DIVISION OF PARK SQUARE ENTERPRISES, INC.
5200 Vineland Road, Suite 200
Orlando, Florida 32811
Phone: (407) 529 - 3000

Park Square HOMES

TYPICAL DETAILS / CONNECTOR SCHEDULE

5803T-SIDE LOAD

THE CARRARA II

DATE	09-01-14
SCALE	AS NOTED
DRAWN	RDC
JOB	N/A
SHEET	15
OF	SHEETS

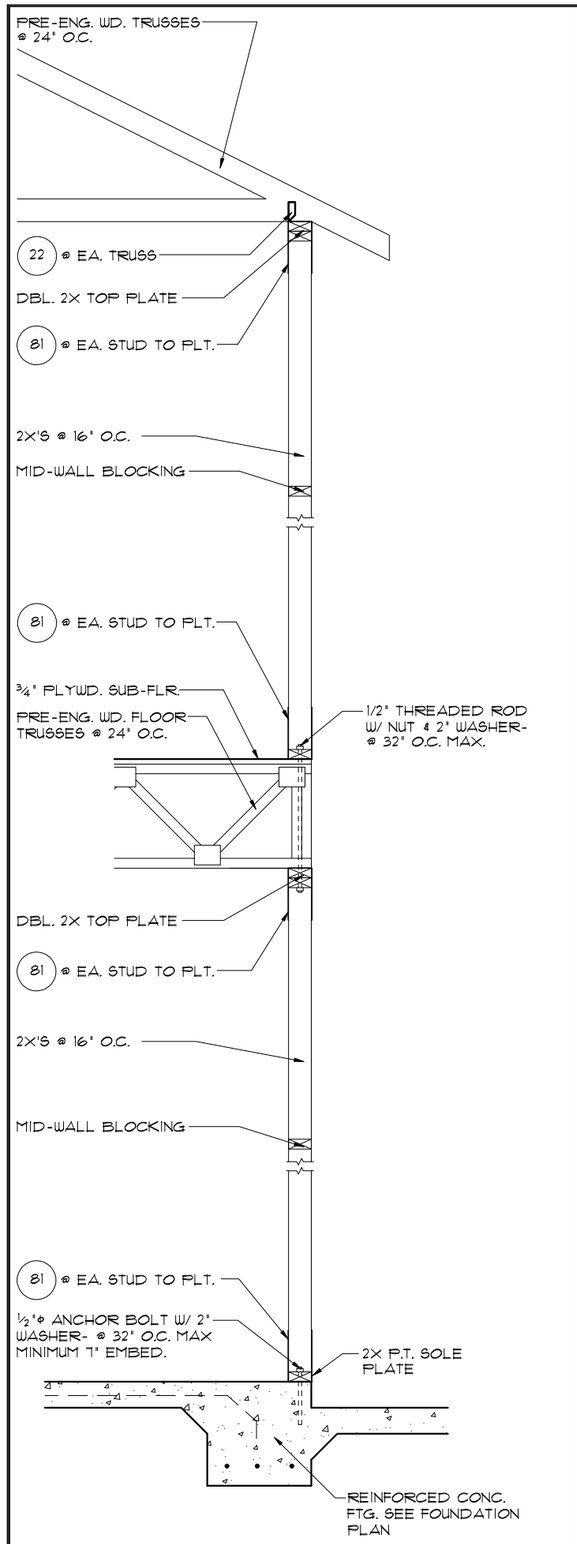

6/16 DETAIL
1/2"=1'-0" (11X17) 1"=1'-0" (22X34)

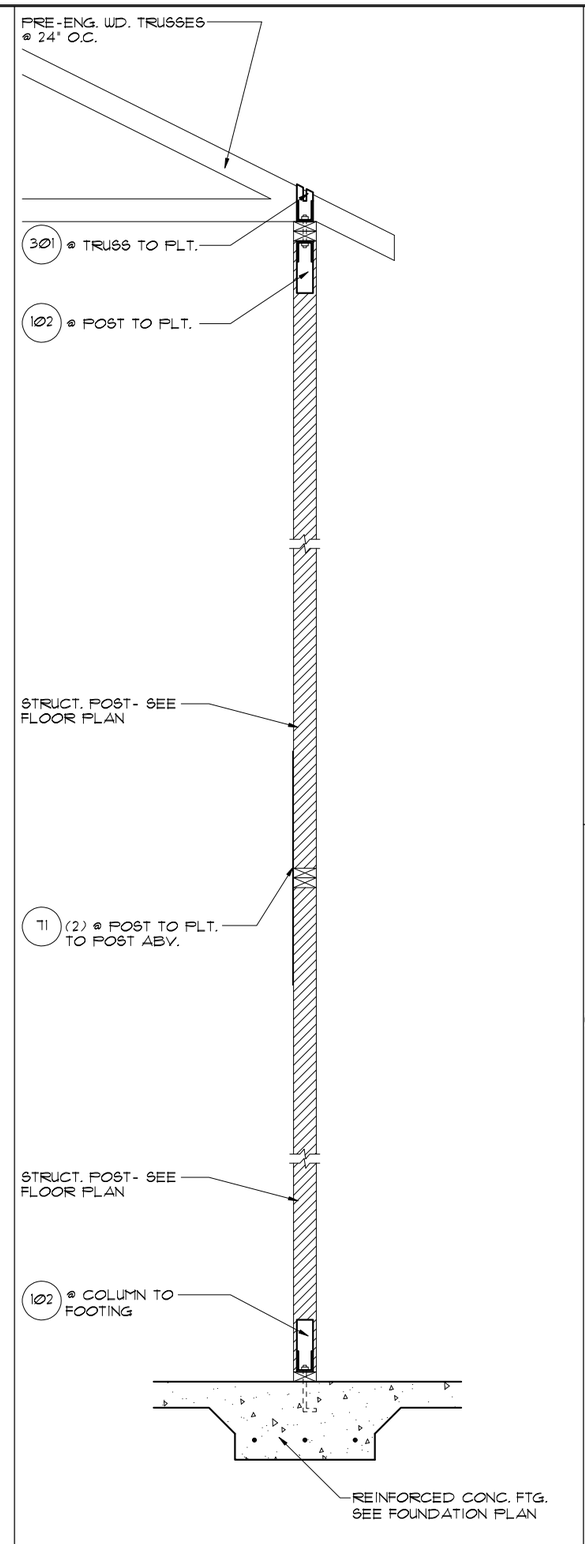

5/16 DETAIL
1/2"=1'-0" (11X17) 1"=1'-0" (22X34)

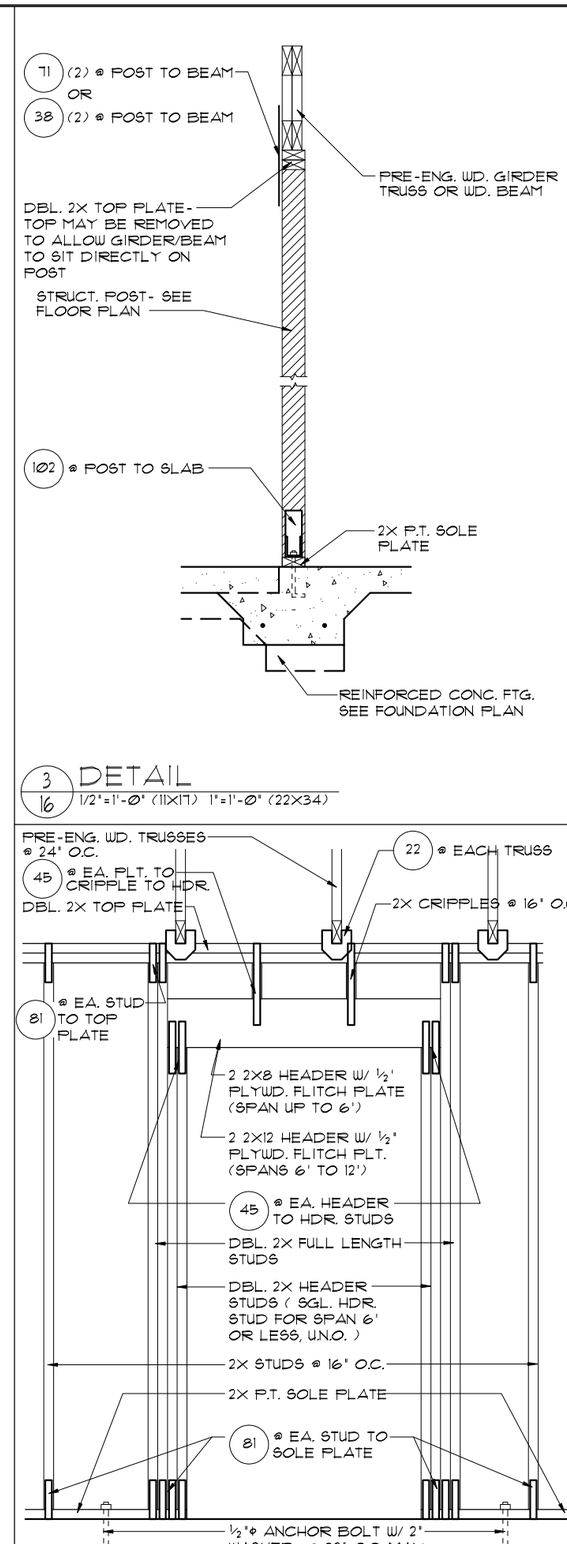

4/16 DETAIL (BRG. W/ UPLIFT)
1/2"=1'-0" (11X17) 1"=1'-0" (22X34)

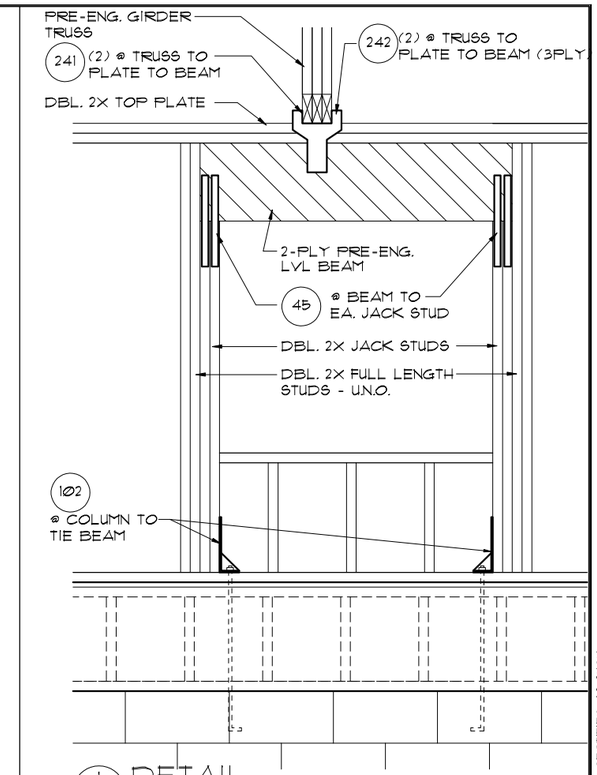

1/16 DETAIL
1/2"=1'-0" (11X17) 1"=1'-0" (22X34)

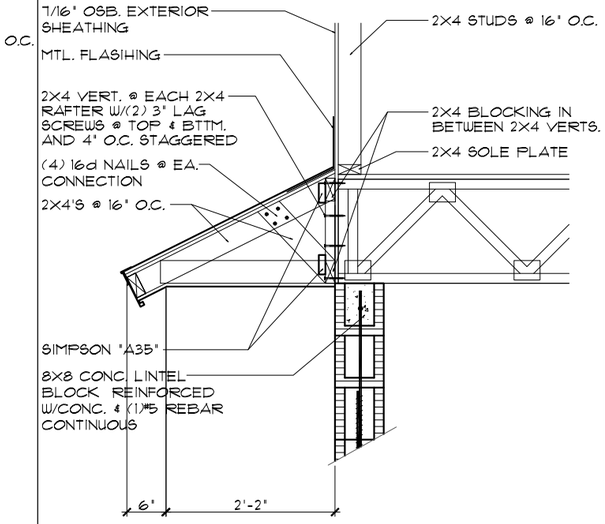

2/16 SHED ROOF DETAIL
1/2"=1'-0" (11X17) 1"=1'-0" (22X34)

SCALE: 1/2" = 1'-0"
0 2 4 8 16

THIS STRUCTURE IS DESIGNED TO WITHSTAND 150 MPH WINDS PER THE 7th EDITION, 2020 OF THE FLORIDA BUILDING CODE RESIDENTIAL AND IS CERTIFIED AS SUCH

LOT SPECIFIC INFORMATION

© COPYRIGHT 2012
Park Square Homes hereby reserves its common law copyrights and other copyrights in these plans, ideas, and design. These plans, ideas and designs are not to be copied or changed in any manner or form whatsoever, nor are they to be assigned to any third party without first obtaining the express written permission from Park Square Homes.

SIGNATURE SERIES

REVISIONS	BY
05-29-20	RDC

Engineering By:
DBE and C
MICHAEL A. THOMPSON
PE 47509
PHONE 407-721-2292

A DIVISION OF PARK SQUARE ENTERPRISES, INC.
5200 Vineland Road, Suite 200
Orlando, Florida 32811
Phone: (407) 529 - 3000

Park Square HOMES

TYPICAL DETAILS

5803T-SIDE LOAD

THE CARRARA II

DATE	09-01-14
SCALE	AS NOTED
DRAWN	RDC
JOB	N/A
SHEET	16
OF	SHEETS

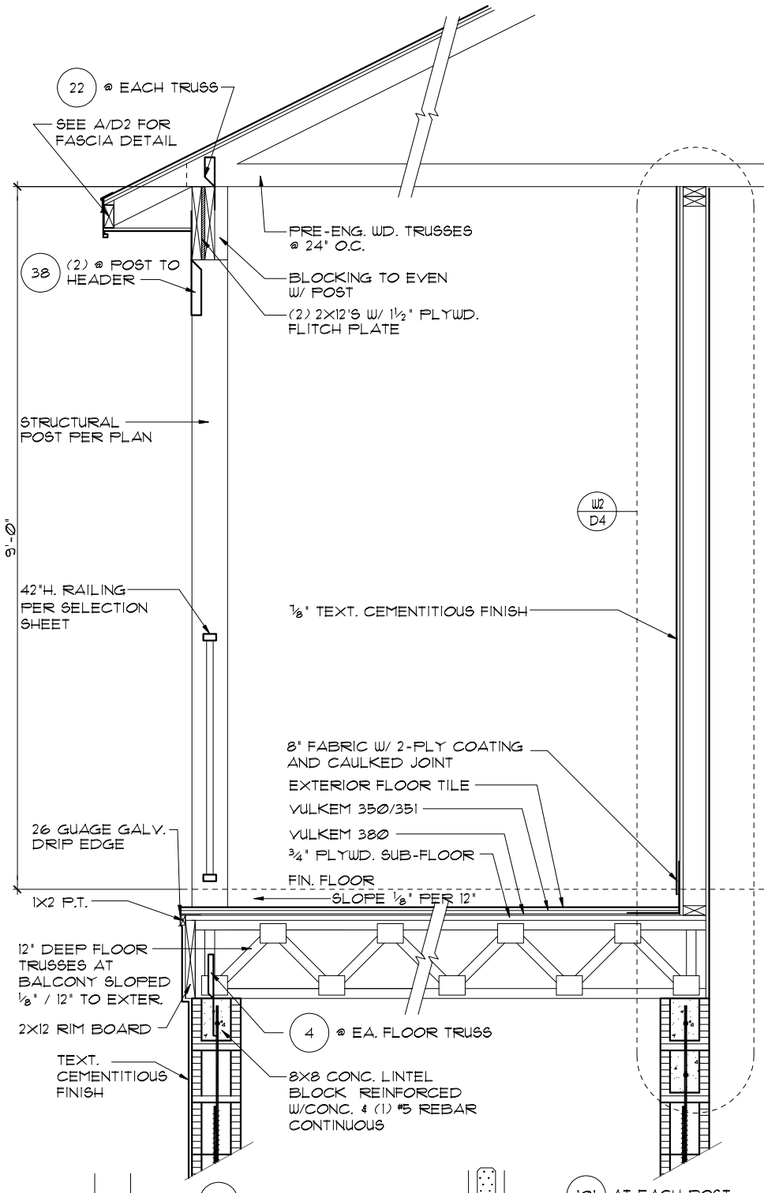

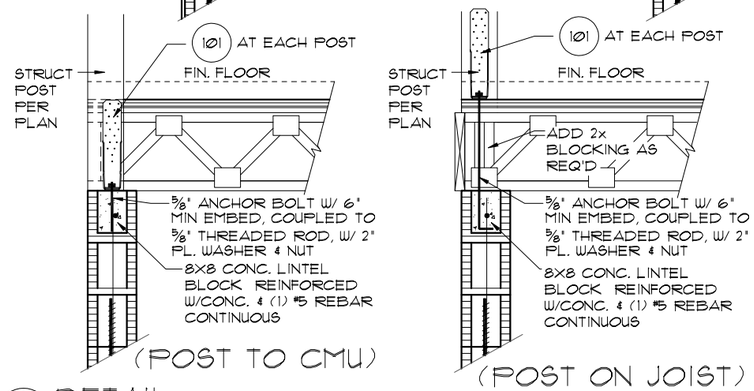

2/17 DETAIL
1/2"=1'-0" (11X17) 1"=1'-0" (22X34)

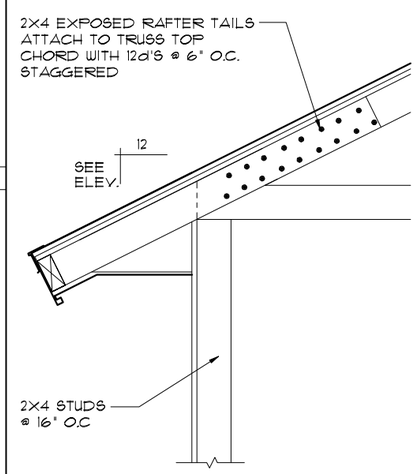

7/17 DETAIL
1/2"=1'-0" (11X17) 1"=1'-0" (22X34)

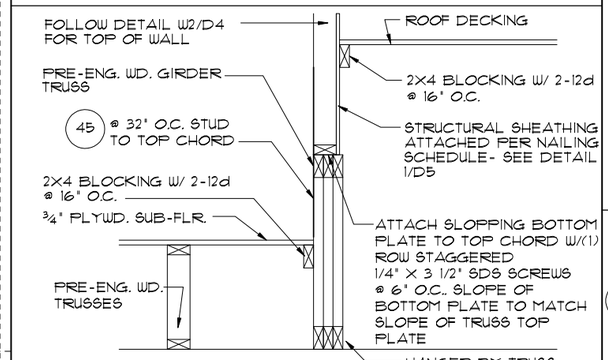

1/17 DETAIL
1/2"=1'-0" (11X17) 1"=1'-0" (22X34)

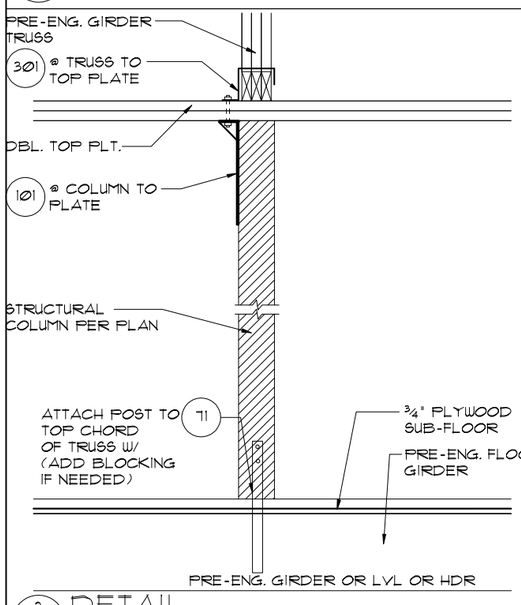

3/17 DETAIL
1/2"=1'-0" (11X17) 1"=1'-0" (22X34)

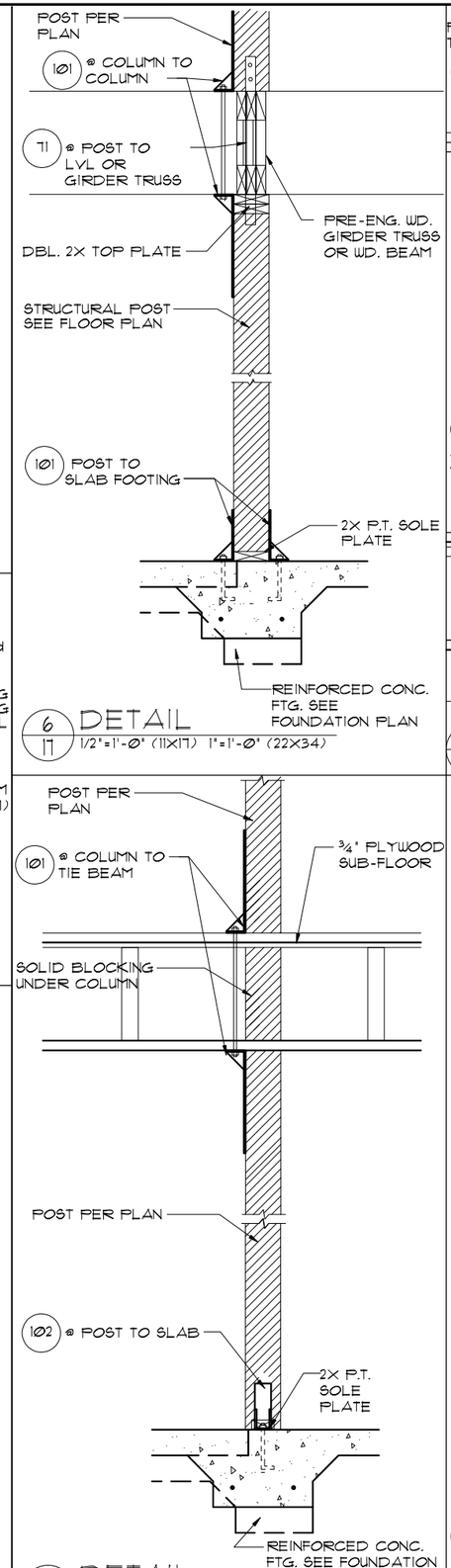

6/17 DETAIL
1/2"=1'-0" (11X17) 1"=1'-0" (22X34)

4/17 DETAIL
1/2"=1'-0" (11X17) 1"=1'-0" (22X34)

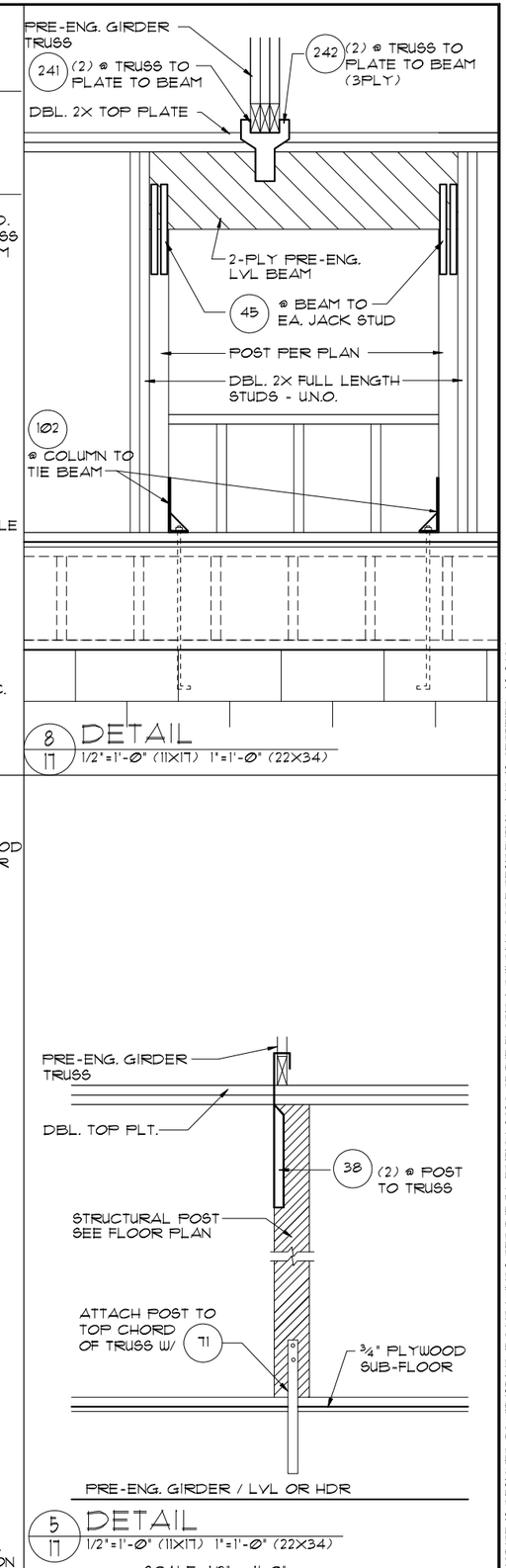

8/17 DETAIL
1/2"=1'-0" (11X17) 1"=1'-0" (22X34)

5/17 DETAIL
1/2"=1'-0" (11X17) 1"=1'-0" (22X34)

SCALE: 1/2" = 1'-0"
0 2 4 8 16

THIS STRUCTURE IS DESIGNED TO WITHSTAND 150 MPH WINDS PER THE 7th EDITION, 2020 OF THE FLORIDA BUILDING CODE RESIDENTIAL AND IS CERTIFIED AS SUCH

SIGNATURE SERIES

LOT SPECIFIC INFORMATION

© COPYRIGHT 2012 Park Square Homes hereby reserves its common law copyrights and other copyrights in these plans, ideas, and design. These plans, ideas and designs are not to be copied or changed in any manner or form whatsoever, nor are they to be assigned to any third party without first obtaining the express written permission from Park Square Homes.

REVISIONS	BY
05-29-20	RDC

Engineering By:
DBE and C
MICHAEL A. THOMPSON
PE 47509
PHONE 407-721-2292

A DIVISION OF PARK SQUARE ENTERPRISES, INC.
5200 Vineland Road, Suite 200
Orlando, Florida 32811
Phone: (407) 529 - 3000

Park Square HOMES

STRUCTURAL DETAILS

5803T-SIDE LOAD

THE CARRARA II

DATE	09-01-14
SCALE	AS NOTED
DRAWN	RDC
JOB	N/A
SHEET	17
OF	SHEETS

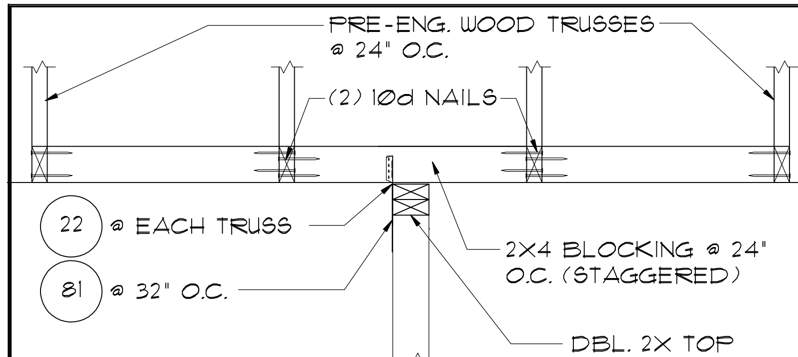

5 DETAIL 18
1/2"=1'-0" (11X17) 1"=1'-0" (22X34)

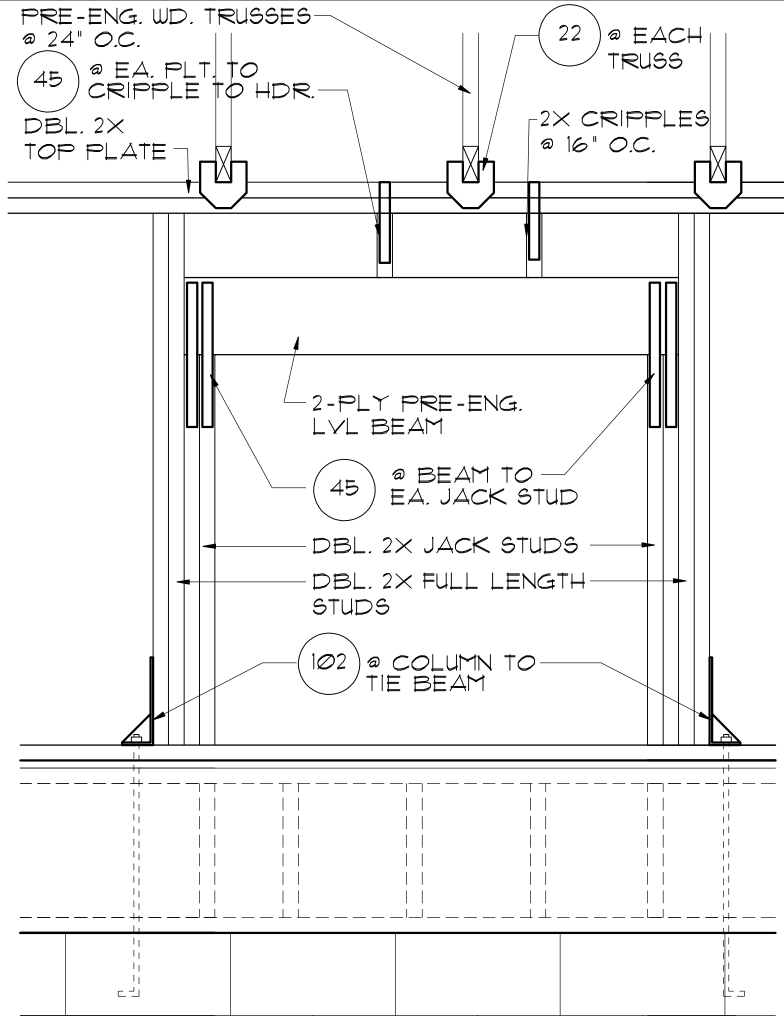

4 DETAIL 18
1/2"=1'-0" (11X17) 1"=1'-0" (22X34)

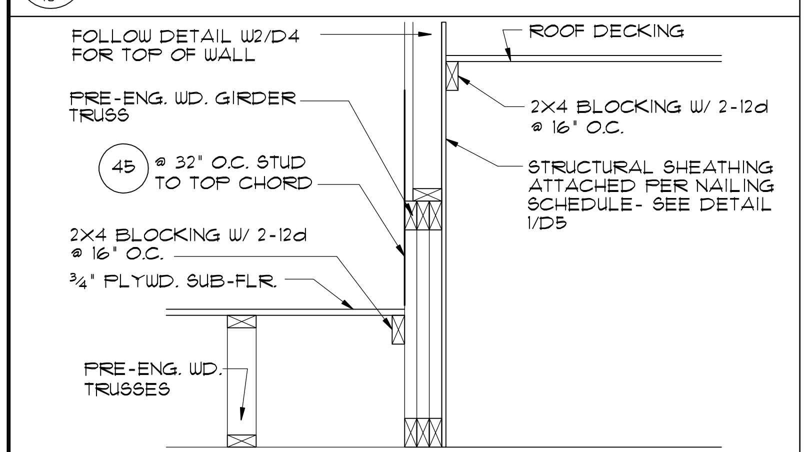

3 DETAIL 18
1/2"=1'-0" (11X17) 1"=1'-0" (22X34)

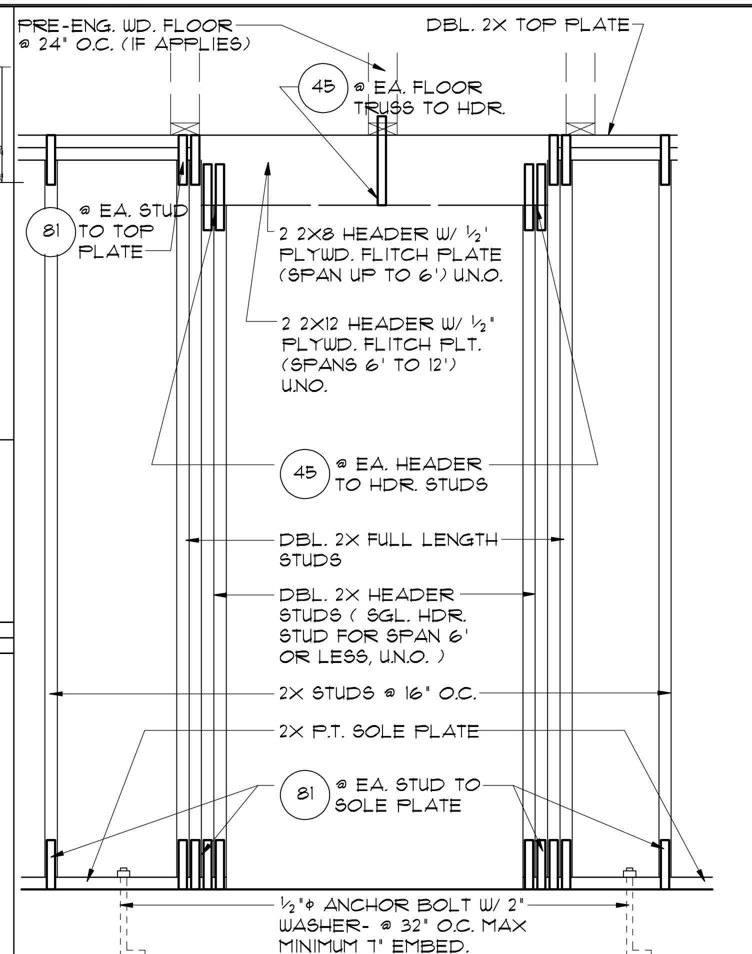

1 DETAIL (BRG. W/ UPLIFT) 18
1/2"=1'-0" (11X17) 1"=1'-0" (22X34)

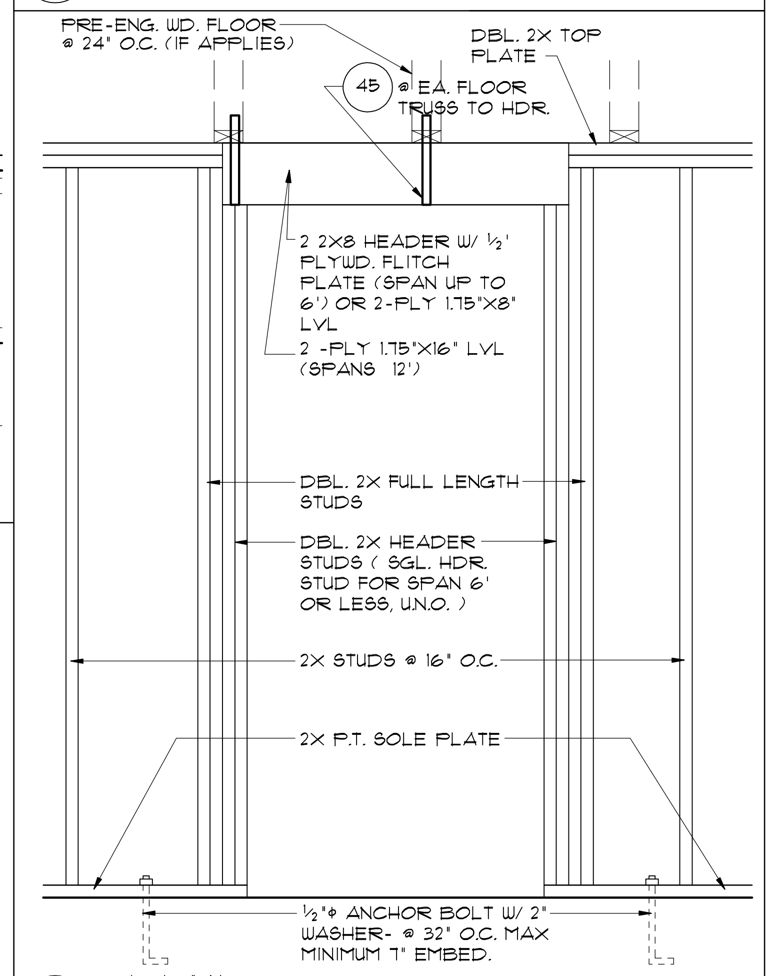

2 DETAIL (BRG. W/O UPLIFT) 18
1/2"=1'-0" (11X17) 1"=1'-0" (22X34)

SAFE LOAD TABLES

FOR GRAVITY, UPLIFT & LATERAL LOADS

8" PRECAST & PRESTRESSED U-LINTELS

LENGTH \ TYPE	8U8	8F8-0B / 8F8-1B	8F12-0B / 8F12-1B	8F16-0B / 8F16-1B	8F20-0B / 8F20-1B	8F24-0B / 8F24-1B	8F28-0B / 8F28-1B	8F32-0B / 8F32-1B
GRAVITY								
2'-10"(34") PRECAST	2302	3166	4473	6039	7526	9004	10472	11936
		3166	4473	6039	7526	9004	10472	11936
3'-6" (42") PRECAST	2302	3138	3377	4689	6001	7315	8630	9947
		3166	4473	6039	7526	9004	10472	11936
4'-0" (48") PRECAST	2029	2325	2496	3467	4438	5410	6384	7358
		2646	4473	6039	7526	9004	10472	11936
4'-6" (54") PRECAST	1651	1787	1913	2657	3403	4149	4896	5644
		2170	4027	6039	7526	9004	10472	9668
5'-4" (64") PRECAST	1184	1223	1301	1809	2317	2826	3336	3846
		1665	2889	5057	6096	5400	6424	7450
5'-10"(70") PRECAST	972	1000	1059	1474	1889	2304	2721	3137
		1459	2464	4144	5458	4437	5280	6122
6'-6"(78") PRECAST	937	1255	2101	3263	2746	3358	3971	4585
		1255	2101	3396	5260	7134	8995	6890
7'-6" (90") PRECAST	767	1029	1675	2385	1994	2439	2886	3333
		1029	1675	2610	3839	5596	6613	5047
9'-4" (112") PRECAST	573	632	1049	1469	1210	1482	1754	2027
		768	1212	1818	2544	3469	4030	3127
10'-6"(126") PRECAST	456	482	802	1125	915	1122	1328	1535
		658	1025	1514	2081	2774	3130	2404
11'-4" (136") PRECAST	445	598	935	1365	1854	2355	1793	2075
		598	935	1365	1854	2441	3155	4044
12'-0"(144") PRECAST	414	545	864	1254	1689	2074	1570	1818
		555	864	1254	1693	2211	2832	3590
13'-4"(160") PRECAST	362	427	726	1028	1331	1635	1224	1418
		485	748	1076	1438	1855	2343	2920
14'-0"(168") PRECAST	338	381	648	919	1190	1462	1087	1260
		455	700	1003	1335	1714	2153	2666
14'-8"(176") PRESTRESSED	N.R.	NR	NR	NR	NR	NR	NR	NR
		465	765	1370	2045	2610	3185	3765
15'-4"(184") PRESTRESSED	N.R.	NR	NR	NR	NR	NR	NR	NR
		420	695	1250	1855	2370	2890	3410
17'-4" (208") PRESTRESSED	N.R.	NR	NR	NR	NR	NR	NR	NR
		310	530	950	1400	1800	2200	2600
19'-4" (232") PRESTRESSED	N.R.	NR	NR	NR	NR	NR	NR	NR
		240	400	750	1090	1400	1720	2030
21'-4" (256") PRESTRESSED	N.R.	NR	NR	NR	NR	NR	NR	NR
		183	330	610	940	1340	1780	2110
22'-0"(264") PRESTRESSED	N.R.	NR	NR	NR	NR	NR	NR	NR
		160	300	570	870	1250	1660	1970
24'-0"(288") PRESTRESSED	N.R.	NR	NR	NR	NR	NR	NR	NR
		130	240	470	720	1030	1350	1610

8" PRECAST & PRESTRESSED U-LINTELS

LENGTH \ TYPE	8F8-1T / 8F8-2T	8F12-1T / 8F12-2T	8F16-1T / 8F16-2T	8F20-1T / 8F20-2T	8F24-1T / 8F24-2T	8F28-1T / 8F28-2T	8F32-1T / 8F32-2T	LATERAL 8U8	LATERAL 8F8
UPLIFT									
2'-10"(34") PRECAST	2727	2878	4101	5332	6569	7811	9055	2021	2021
	2727	2784	3981	5190	6407	7630	8857		
3'-6" (42") PRECAST	2165	2289	3260	4237	5219	6204	7192	1257	1257
	2165	2215	3165	4125	5091	6061	7036		
4'-0" (48") PRECAST	1878	1989	2832	3680	4532	5387	6245	938	938
	1878	1925	2750	3583	4422	5264	6110		
4'-6" (54") PRECAST	1660	1762	2507	3257	4010	4767	5525	727	727
	1660	1705	2435	3171	3913	4658	5406		
5'-4" (64") PRECAST	1393*	1484	2110	2741	3375	4010	4648	505	505
	1393	1437	2050	2670	3293	3920	4549		
5'-10"(70") PRECAST	1272*	1357	1930	2505	3084	3665	4247	418	418
	1272	1315	1875	2441	3010	3583	4157		
6'-6"(78") PRECAST	1141*	1200	1733	2250	2769	3290	3812	707	887
	1141	1182	1684	2192	2703	3216	3732		
7'-6" (90") PRECAST	959*	912	1475	1914	2354	2797	3240	591	657
	990	1029	1466	1907	2351	2797	3245		
9'-4" (112") PRECAST	801*	612	980	1269	1560	1852	2144	454	630
	801	755	1192	1550	1910	2271	2634		
10'-6"(126") PRECAST	716*	498	793	1027	1261	1496	1731	396	493
	716	611	1039	1389	1711	2034	2358		
11'-4" (136") PRECAST	666*	439	696	899	1104	1309	1515	363	556
	666	535	905	1295	1595	1896	2198		
12'-0"(144") PRECAST	607*	400	631	816	1001	1186	1372	340	494
	631	486	818	1209	1514	1799	2086		
13'-4"(160") PRECAST	500*	340	532	686	841	997	1153	302	398
	573	409	682	1004	1367	1637	1897		
14'-0"(168") PRECAST	458*	316	493	635	778	922	1065	286	360
	548	378	629	922	1254	1567	1816		
14'-8" (176") PRESTRESSED	243	295	459	591	724	857	990	N.R.	357
	243	352	582	852	1156	1491	1742		
15'-4"(184") PRESTRESSED	228	278	430	553	677	801	925	N.R.	327
	228	329	542	791	1072	1381	1676		
17'-4" (208") PRESTRESSED	188	236	361	464	567	670	774	N.R.	255
	188	276	449	649	874	1121	1389		
19'-4" (232") PRESTRESSED	165	207	313	401	490	578	667	N.R.	204
	165	239	383	550	736	940	1160		
21'-4" (256") PRESTRESSED	145	186	278	356	433	512	590	N.R.	172
	142	212	336	477	635	807	993		
22'-0"(264") PRESTRESSED	140	180	268	343	418	493	568	N.R.	161
	137	205	322	457	607	771	947		
24'-0"(288") PRESTRESSED	127	165	244	312	380	447	515	N.R.	135
	124	186	290	408	538	680	833		

*REDUCE VALUE BY 25% FOR GRADE 40 FIELD REBAR

8" PRECAST W/ 2" RECESS DOOR U-LINTELS

LENGTH \ TYPE	8RU6	8RF6-0B / 8RF6-1B	8RF10-0B / 8RF10-1B	8RF14-0B / 8RF14-1B	8RF18-0B / 8RF18-1B	8RF22-0B / 8RF22-1B	8RF26-0B / 8RF26-1B	8RF30-0B / 8RF30-1B
GRAVITY								
4'-4" (52") PRECAST	1489	1591	3053	2982	3954	4929	5904	6880
		1827	3412	4982	6472	7947	9416	10878
4'-6" (54") PRECAST	1357	1449	2782	2714	3600	4487	5375	6264
		1702	3412	4982	6472	7947	9416	10878
5'-8" (68") PRECAST	785	832	1602	1550	2058	2566	3075	3585
		1153	2162	4074	6472	6516	5814	6839
5'-10"(70") PRECAST	735	779	1500	1449	1924	2400	2876	3352
		1103	2051	3811	6472	6516	5450	6411
6'-8" (80") PRECAST	822	907	1677	2933	2576	3223	3872	4522
		907	1677	2933	4100	6730	8177	6707
7'-6" (90") PRECAST	665	761	1377	2252	1958	2451	2944	3439
		764	1377	2329	3609	5492	6624	5132
9'-8" (116") PRECAST	371	420	834	1253	1071	1342	1614	1886
		535	928	1497	2179	2618	3595	2875

8" PRECAST W/ 2" RECESS DOOR U-LINTELS

LENGTH \ TYPE	8RF6-1T / 8RF6-2T	8RF10-1T / 8RF10-2T	8RF14-1T / 8RF14-2T	8RF18-1T / 8RF18-2T	8RF22-1T / 8RF22-2T	8RF26-1T / 8RF26-2T	8RF30-1T / 8RF30-2T	LATERAL 8RU6	LATERAL 8RF6
UPLIFT									
4'-4" (52") PRECAST	1244	1573	2413	3260	4112	4967	5825	932	932
	1244	1519	2339	3170	4008	4850	5696		
4'-6" (54") PRECAST	1192	1507	2311	3121	3937	4756	5577	853	853
	1192	1455	2240	3036	3837	4643	5453		
5'-8" (68") PRECAST	924*	1172	1795	2423	3055	3689	4325	501	501
	924	1132	1741	2357	2978	3603	4230		
5'-10"(70") PRECAST	896*	1138	1742	2352	2965	3581	4198	469	469
	896	1099	1690	2288	2891	3497	4106		
6'-8" (80") PRECAST	778	882	1513	2042	2573	3107	3642	830	1100
	778	956	1468	1987	2509	3035	3563		
7'-6" (90") PRECAST	688	697	1325	1810	2280	2753	3227	710	941
	688	849	1302	1762	2225	2690	3157		
9'-8" (116") PRECAST	533*	433	808	1123	1413	1704	1995	516	614
	533	527	1009	1369	1728	2088	2450		

*REDUCE VALUE BY 15% FOR GRADE 40 FIELD REBAR

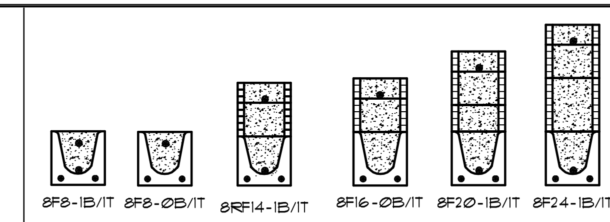

MATERIALS

1. f'c precast lintels = 3500 psi.
2. f'c prestressed lintels = 6000 psi.
3. f'c grout = 3000 psi w/ maximum 3/8" aggregate.
4. Concrete masonry units (CMU) per ASTM C90 w/ minimum net area compressive strength = 1900 psi.
5. Rebar provided in precast lintel per ASTM A615 GR60. Field rebar per ASTM A615 GR40 or GR60.
6. Prestressing strand per ASTM A416 grade 270 low relaxation.
7. 7/32 wire per ASTM A510.
8. Mortar per ASTM C270 type M or S.

GENERAL NOTES

1. Provide full mortar head and bed joints.
2. Shore filled lintels as required.
3. Installation of lintel must comply with the architectural and/or structural drawings.
4. Lintels are manufactured with 5-1/2" long notches at the ends to accommodate vertical cell reinforcing and grouting.
5. All lintels meet or exceed L/360 vertical deflection, except lintels 17'-4" and longer with a nominal height of 8" meet or exceed L/180.
6. Bottom field added rebar to be located at the bottom of the lintel cavity.
7. 7/32" diameter wire stirrups are welded to the bottom steel for mechanical anchorage.
8. Cast-in-place concrete may be provided in composite lintel in lieu of concrete masonry units.
9. Safe load ratings based on rational design analysis per ACI 318 and ACI 530

SAFE LOAD TABLE NOTES

1. All values based on minimum 4" bearing. Exception: Safe loads for unfilled lintels must be reduced by 20% if bearing length is less than 6-1/2". Safe loads for all recessed lintels based on 8" nominal bearing.
2. N.R. = Not Rated.
3. Safe loads are total superimposed allowable load on the section specified.
4. Safe loads based on grade 40 or grade 60 field rebar.
5. Additional lateral load capacity can be obtained by the designer by providing addional reinforced masonry above the precast lintel.
6. One #7 rebar may be substituted for two #5 rebars in 8" lintels only.
7. The designer may evaluate concentrated loads from the safe load tables by calculating the max. resisting moment and shear at d-away from the face of support.
8. For composite lintel heights not shown, use safe load from next lower height.
9. All safe loads in units of pounds per linear foot.

TYPE DESIGNATION

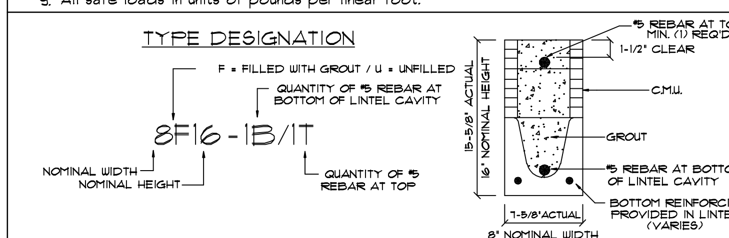

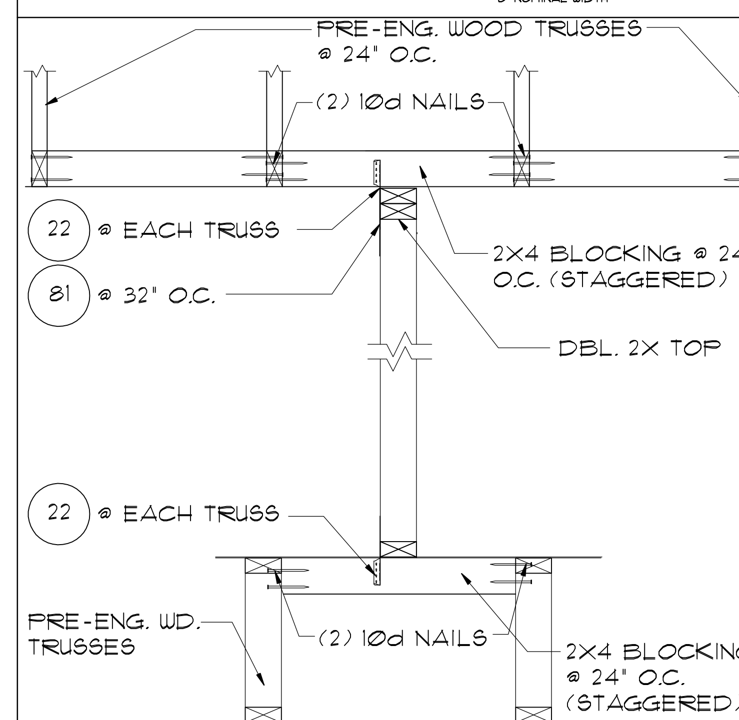

6 DETAIL 18
1/2"=1'-0" (11X17) 1"=1'-0" (22X34)

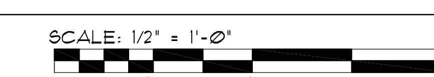

THIS STRUCTURE IS DESIGNED TO WITHSTAND 150 MPH WINDS PER THE 7th EDITION 2020 OF THE FLORIDA BUILDING CODE RESIDENTIAL AND IS CERTIFIED AS SUCH

LOT SPECIFIC INFORMATION

SIGNATURE SERIES

© COPYRIGHT 2012
Park Square Homes hereby reserves its common law copyrights and other copyrights in these plans, ideas and design. These plans, ideas and designs are not to be copied or changed in any manner or form whatsoever nor are they to be assigned to any third party without first obtaining the express written permission from Park Square Homes.

REVISIONS	BY
05-29-20	RDC

Engineering By:
DBE and C
MICHAEL A. THOMPSON
PE 47509
PHONE 407-721-2292

A DIVISION OF PARK SQUARE ENTERPRISES, INC.
5200 Vineland Road, Suite 200
Orlando, Florida 32811
Phone: (407) 529 - 3000
Park Square HOMES

TYPICAL DETAILS/ PRE CAST LINTEL DATA

5803T-SIDE LOAD

THE CARRARA II

DATE	09-01-14
SCALE	AS NOTED
DRAWN	RDC
JOB	N/A
SHEET	18 OF SHEETS

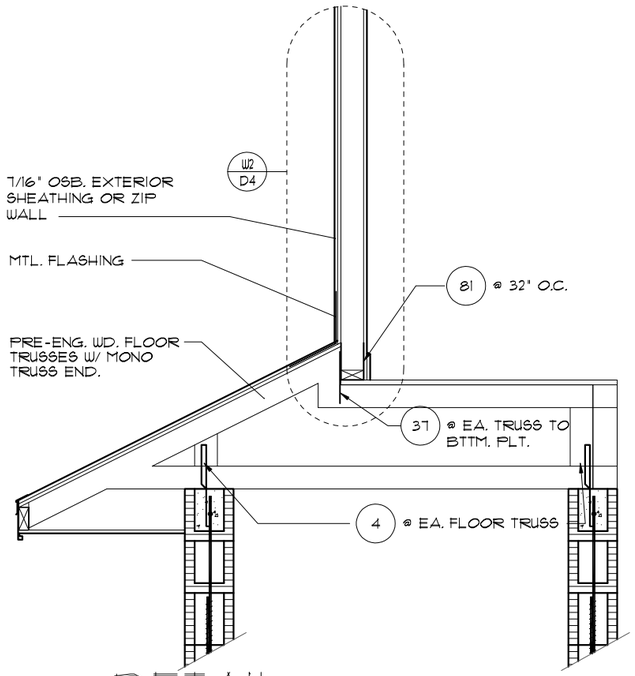

5/19 DETAIL
1/2"= 1'-0" (11X17) 1"= 1'-0" (22"X34")

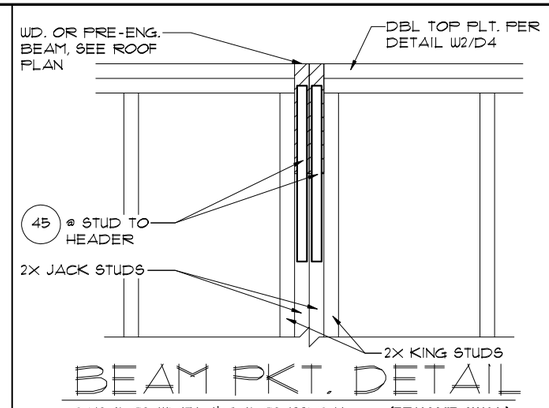

BEAM PKT. DETAIL
3/4"=1'-0" (11X17) 1½"=1'-0" (22X34) **(BEAM MID. WALL)**

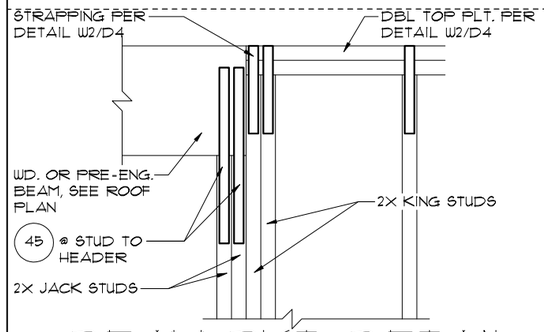

4/19 BEAM PKT. DETAIL
3/4"=1'-0" (11X17) 1½"=1'-0" (22X34) **(BEAM IN WALL)**

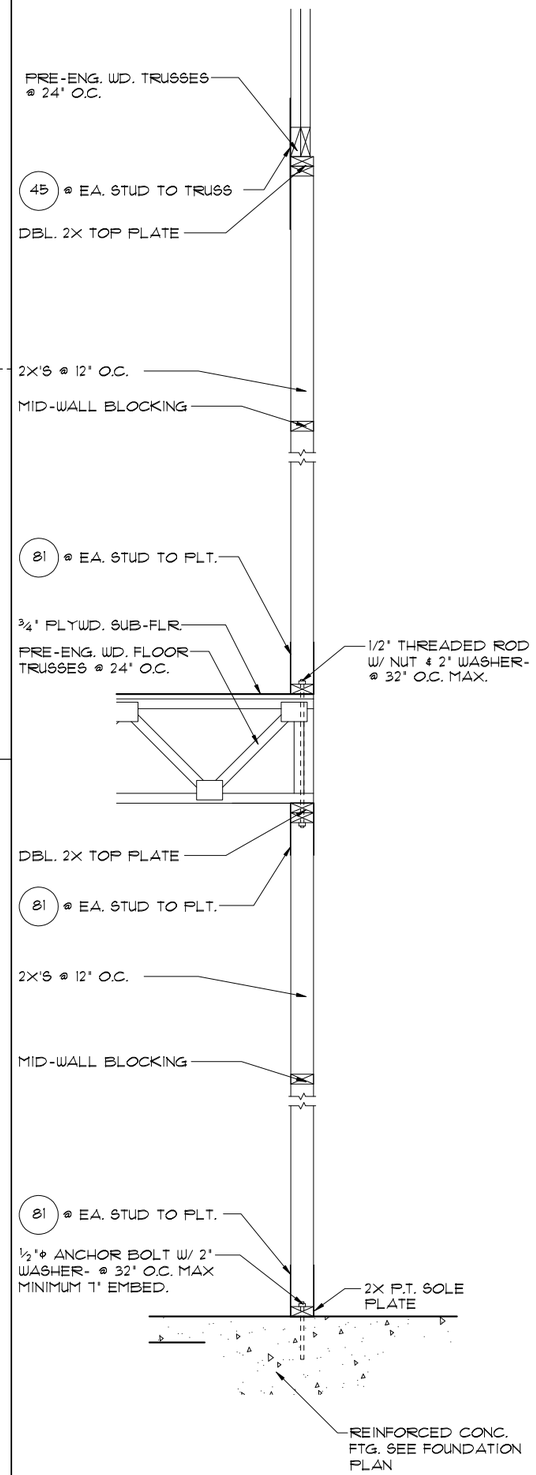

2/19 DETAIL
1/2"=1'-0" (11X17) 1"=1'-0" (22X34)

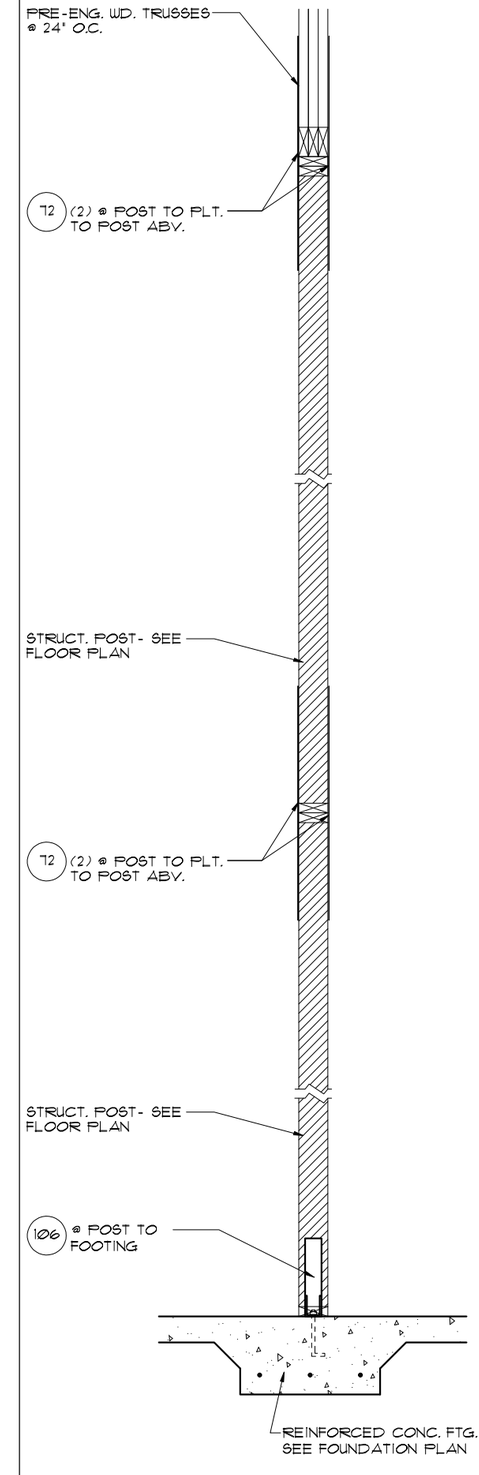

1/19 DETAIL
1/2"=1'-0" (11X17) 1"=1'-0" (22X34)

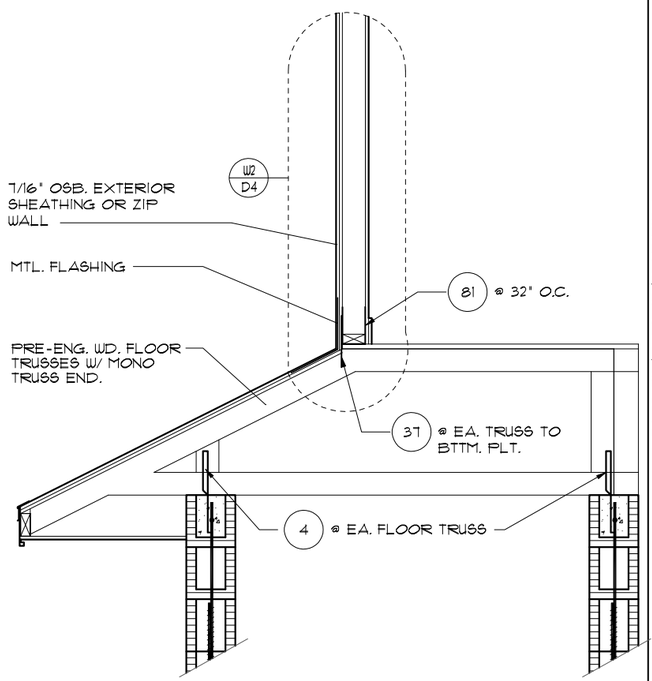

4/19 DETAIL
1/2"= 1'-0" (11X17) 1"= 1'-0" (22"X34")

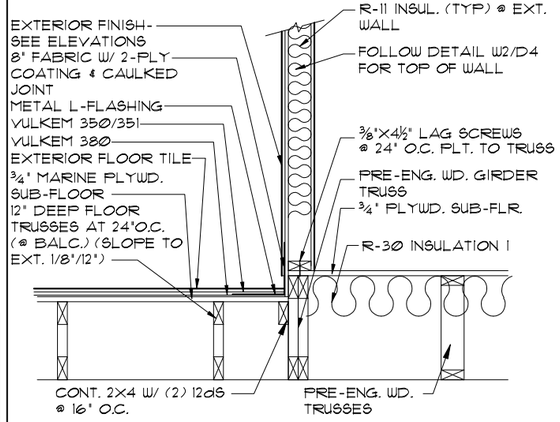

3/19 DETAIL
1/2"=1'-0" (11X17) 1"=1'-0" (22X34)

THIS STRUCTURE IS DESIGNED TO WITHSTAND 150 MPH WINDS PER THE 7th EDITION, 2020 OF THE FLORIDA BUILDING CODE RESIDENTIAL AND IS CERTIFIED AS SUCH

LOT SPECIFIC INFORMATION

© COPYRIGHT 2012
Park Square Homes hereby reserves its common law copyrights and other copyrights in these plans, ideas, and design. These plans, ideas and designs are not to be copied or changed in any manner or form whatsoever, nor are they to be assigned to any third party without first obtaining the express written permission from Park Square Homes.

SIGNATURE SERIES

REVISIONS	BY
05-29-20	RDC

Engineering By:
DBE and C
MICHAEL A. THOMPSON
PE 47509
PHONE 407-721-2292

A DIVISION OF PARK SQUARE ENTERPRISES, INC.
5200 Vineland Road, Suite 200
Orlando, Florida 32811
Phone: (407) 529 - 3000

Park Square HOMES

TYPICAL DETAILS

5803T-SIDE LOAD

THE CARRARA II

DATE	09-01-14
SCALE	AS NOTED
DRAWN	RDC
JOB	N/A
SHEET	19
OF	SHEETS