© COPYRIGHT 2016 PARK SQUARE HOMES HEREBY RESERVES ITS COMMON LAW COPYRIGHTS IN THESE PLANS, IDEAS AND DESIGN. THESE PLANS, IDEAS AND DESIGNS ARE NOT TO BE COPIED OR MODIFIED IN ANY MATTER OR FORM WHATSOEVER, NOR ARE THEY TO BE ASSIGNED TO ANY THIRD PARTY WITHOUT FIRST OBTAINING THE EXPRESS WRITTEN PERMISSION FROM PARK SQUARE HOMES.

(SUBDIVISION NAME) TOWNHOMES

Park Square HOMES

6-UNIT:
(TYLER, JACKSON, GRANT, JACKSON, GRANT & MONROE)

PAD SIZE 132'-0"X 70'-0"

houzz FIND US ON FACEBOOK & HOUZZ AT MJS CUSTOM HOME DESIGNS

SHEET INDEX:

A0	COVER SHEET
A1	SLAB PLAN
A2	FIRST FLOOR OVERALL
A3	SECOND FLOOR OVERALL
A4	FLOOR PLANS (TYLER)(JACKSON)
A5	FLOOR PLANS (GRANT)(MONROE)
A6	FRONT & REAR ELEVATIONS
A7	LEFT & RIGHT ELEVATIONS
A8	SECTIONS
E1	FLOOR PLANS (TYLER)(JACKSON)
E2	FLOOR PLANS (GRANT)(MONROE)

REVISION SCHEDULE:

NO:	DATE:	DESCRIPTION:	BY:
1	06/08/22	MASTER CREATED	M.C.

DISTRIBUTED LIVE LOAD
(IN POUNDS PER SQ. FT.)

UNINHABITABLE ATTICS WITHOUT STORAGE	10
UNINHABITABLE ATTICS WITH LIMITED STORAGE	20
HABITABLE ATTICS & ATTICS SERVED WITH FIXED STAIRS	30
BALCONIES (EXTERIOR) AND DECKS	40
FIRE ESCAPES	40
GUARDS AND HANDRAILS	200
GUARD IN-FILL COMPONENTS	50
PASSENGER VEHICLE GARAGES	50
ROOMS OTHER THAN SLEEPING ROOMS	40
SLEEPING ROOMS	30
STAIRS	40

ANSI STANDARD FOR MEASURING HOUSES

THE ANSI STANDARD FOR MEASURING HOUSES:
NATIONAL STANDARD Z765-1996 NEW CONSTRUCTION THE ANSI STANDARDS BASE FLOOR AREA CALCULATIONS ON THE EXTERIOR DIMENSIONS OF THE BUILDING AT EACH FLOOR LEVEL AND INCLUDE ALL INTERIOR WALLS AND VOIDS. FOR ATTACHED UNITS, THE OUTSIDE DIMENSION IS THE CENTER LINE OF THE COMMON WALLS. INTERNAL ROOM DIMENSIONS AREN'T USED IN THIS SYSTEM OF MEASURING. THE ANSI STANDARDS BASE FLOOR AREA CALCULATIONS ON THE EXTERIOR DIMENSIONS OF THE BUILDING AT EACH FLOOR LEVEL AND INCLUDE ALL INTERIOR WALLS AND VOIDS. FOR ATTACHED UNITS, THE OUTSIDE DIMENSION IS THE CENTER LINE OF THE COMMON WALLS. INTERNAL ROOM DIMENSIONS AREN'T USED IN THIS SYSTEM OF MEASURING.

THE ANSI STANDARDS BASE FLOOR AREA CALCULATIONS ON THE EXTERIOR DIMENSIONS OF THE BUILDING AT EACH FLOOR LEVEL AND INCLUDE ALL INTERIOR WALLS AND VOIDS SEPARATED INTO TWO AREAS:

1. AIR-CONDITIONED SPACE
2. NON-AIR-CONDITIONED SPACE (GARAGES, PATIOS, PORCHES, BREEZEWAYS).

THE ANSI STANDARDS DEFINE "FINISHED AREA" AS "AN ENCLOSED AREA IN A HOUSE SUITABLE FOR YEAR-ROUND USE, EMBODYING WALLS, FLOORS, AND CEILINGS THAT ARE LIKE THE REST OF THE MEASUREMENTS MUST BE TAKEN TO THE NEAREST INCH OR TENTH OF A FOOT, AND FLOOR AREA MUST BE REPORTED TO THE NEAREST SQUARE FOOT. THESE WOULD INCLUDE BONUSATTIC SPACES AND ARE USUALLY LISTED SEPARATELY.

GENERAL CONTRACTOR:

IT IS THE RESPONSIBILITY OF THE GENERAL CONTRACTOR TO INSTALL ALL MATERIALS MEETING FLORIDA APPROVAL COMPLIANCE TO AVOID WATER INTRUSION AND MOISTURE INTRUSION ON WINDOWS, DOORS, ROOF, AND ANY OTHER AREA AROUND EACH UNIT/ HOUSE/ APARTMENT/ CONDOMINIUM/ TOWNHOUSE.

ENGINEERING KEY

DESIGN REQUIREMENTS
A. ROOF LIVE LOAD IS 20 PSF
B. FLOORS LIVE LOAD IS 40 PSF, BALCONIES, DECKS, STAIRS, LIVE LOAD IS 60PSF

NOTE: THIS STRUCTURE HAS BEEN DESIGNED TO MEET OR EXCEED REQUIREMENTS OF THE (2020) FLORIDA BUILDING CODE RESIDENTIAL (7TH EDITION)

1. WIND EXPOSURE - CATEGORY (C)
2. ULTIMATE WIND SPEED - 140MPH. NOMINAL WIND SPEED - 109MPH.
3. WIND IMPORTANCE FACTOR - 1.0
4. INTERNAL PRESSURE COEFFICIENT- .18
5. MAXIMUM PRESSURE FOR COMPONENTS AND CLADDING, 21.0 p.s.f./-28.1 p.s.f. UNLESS NOTED OTHERWISE.
6. SINGLE FAMILY RESIDENCE TO BE RISK CATEGORY II.

DESIGN STATEMENT

THIS STRUCTURE HAS BEEN DESIGNED TO MEET OR EXCEED REQUIREMENTS OF THE (2020) FLORIDA BUILDING CODE RESIDENTIAL (7TH EDITION)

EFFECTIVE WIND AREA (SQ. FT.)	WIND PRESSURE AND SUCTION (PSF.) (+) VALUE DENOTES PRESSURE (-) VALUE DENOTES SUCTION	
AREA	(4)	(5)
10	(+) 29.4 / (-) 31.9	(+) 29.4 / (-) 39.4
20	(+) 28.1 / (-) 30.6	(+) 28.1 / (-) 36.7
50	(+) 26.3 / (-) 28.8	(+) 26.3 / (-) 33.2
100	(+) 25.0 / (-) 27.5	(+) 25.0 / (-) 30.6
GARAGE DOORS		
16'-0" x 8'-0"	16'-0" x 7'-0"	18'-0" x 8'-0"
(+) 21.7 (-) 26.3	(+) 21.9 (-) 26.7	(+) 24.4 (-) 27.2
9'-0" x 8'-0"	9'-0" x 7'-0"	
(+) 25.80 (-) 29.10	(+) 25.9 (-) 29.2	OVERHANG (-) 55.30
8'-0" x 8'-0"	8'-0" x 7'-0"	
(+) 22.9 (-) 28.1	(+) 23.1 (-) 29.0	

WIND PRESSURE AND SUCTION DIAGRAM

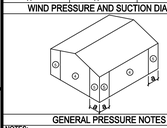

GENERAL PRESSURE NOTES

NOTES:
1. "4" END ZONE IS ONLY WITHIN 5'-0" OF ALL EXTERIOR BUILDING CORNERS.
- INDICATED PRESSURES CAN BE INTERPOLATED FOR OTHER DOOR SIZES, OTHERWISE USE LOAD ASSOCIATED WITH THE LOWER EFFECTIVE AREA.

RKE

FLORIDA BUILDING CODE:
(FBC) 2020 (7TH EDITION)

DESIGN CRITERIA:
- 2020 FLORIDA BUILDING CODE (BUILDING) - 7TH EDITION.
- 2020 FLORIDA BUILDING CODE (RESIDENTIAL) - 7TH EDITION.
- 2020 FLORIDA BUILDING CODE (PLUMBING) - 7TH EDITION.
- 2020 FLORIDA BUILDING CODE (MECHANICAL) - 7TH EDITION.
- 2020 FLORIDA BUILDING CODE (FUEL/GAS) - 7TH EDITION.
- 2020 FLORIDA BUILDING CODE (EXISTING BUILDING) 7TH EDITION.
- 2020 FLORIDA BUILDING CODE (ACCESSIBILITY) 7TH EDITION.
- 2020 FLORIDA BUILDING CODE (ENERGY CONSERVATION) 7TH EDITION.
- 2020 FLORIDA FIRE PREVENTION CODE (7TH EDITION).
- 2017 NATIONAL ELECTRICAL CODE (NEC)
- 2010 NFPA 101 - LIFE SAFETY CODE
- OCCUPANCY CLASSIFICATION: GROUP R-3 (TOWNHOMES)
- CONSTRUCTION TYPE: TYPE VB (FBC-R 602.3)
- SPRINKLED: NO
- NUMBER OF STORIES: 2 STORIES

SPECIFIC PARAMETERS FROM FBC 2020 USED FOR DESIGN INCLUDE:
- CONCRETE MASONRY RESIDENTIAL
- CONSTRUCTION WOOD FRAME CONSTRUCTION
- AMERICAN SOCIETY OF CIVIL ENGINEERS

THOMPSON ENGINEERING GROUP, INC.
4401 Vineland Road Suite A9 Orlando, FL. 32811
Phone: (407) 794-4660
Fax: (407) 734-1790
www.tegfl.com

815 Orienta Ave., Suite #1040
Altamonte Springs, Fl. 32701
Ph: (407) 629-6711
Fax: (407) 629-6776
www.mjsdesignersgroup.com

COPYRIGHT NOTICE: THESE PLANS, DESIGNS, AND IDEAS ARE THE EXCLUSIVE INTELLECTUAL PROPERTY OF MJS, INC. ALL RIGHTS RESERVED.

MJS designers group
residential+commercial+architecture

AIBD

GOBA GREATER ORLANDO BUILDERS ASSOCIATION

6-Unit: Rear Load Detached

Models: Tyler, Jackson, Grant, Jackson, Grant & Monroe

Building Pad #'XX
Lot# XX-XX, Subdivision
Street Address
City, State, Zip Code

A division of Park Square Enterprises Inc.
5200 Vineland Rd. Suite #200
Orlando, Fl. 32811
Phone: (407) 329-3000

Park Square HOMES

ISSUE DATE	10/17/2022
REVISIONS	
PROJECT:	22-1148
SCALE:	AS NOTED
DRAWN BY:	M.C.
DESIGNED BY:	M.J.S.

COVER PAGE
A0

Oct 17, 2022, 10:28am Carlos C:\Users\carlos.MJSDG\appdata\local\temp\AcPublish_12304\60 Cover Sheet.dwg

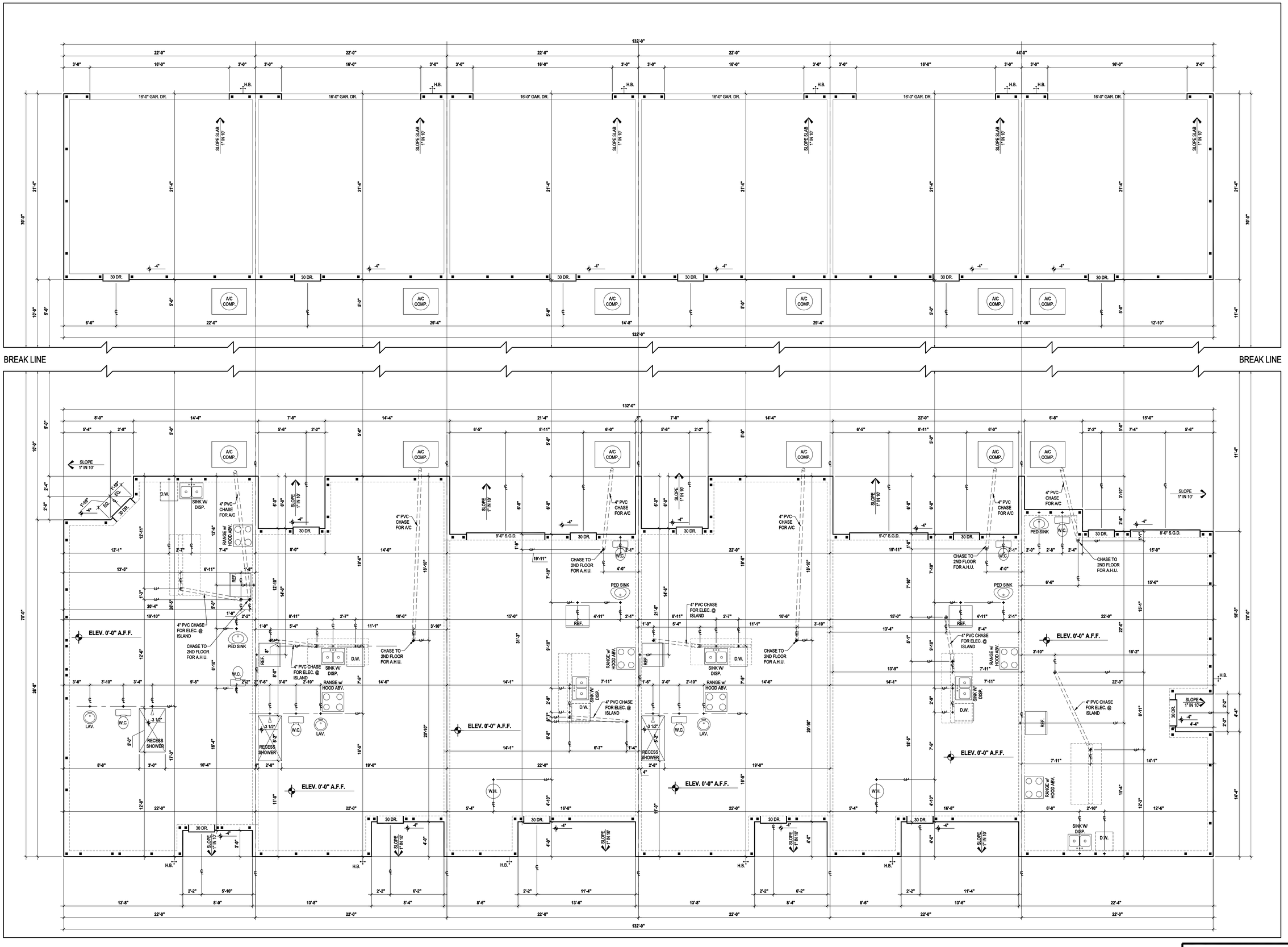

6-Unit: Rear Load Detached

Models: Tyler, Jackson, Grant, Jackson, Grant & Monroe

Building Pad #XX
Lot# XX-XX, Subdivision
Street Address
City, State, Zip Code

Carlos V:\Park Square Homes\MODELS\TOWNHOME MODELS\Townhomes (Orlando)\1- Townhome Models\Rear Load Detached Towns (Raised Heel)\6-Unit\A1 Slab Plan.dwg

Oct 17, 2022,10:28am

Slab Plan

SCALE: 1/4" = 1'-0"

THOMPSON ENGINEERING GROUP, INC.
4401 Vineland Road Suite A6 Orlando, FL 32811
Ph: (407) 734-1450
Fax: (407) 734-1790
www.tegfl.com

815 Orienta Ave., Suite #1040
Altamonte Springs, Fl. 32701
Ph: (407) 629-6711
Fax: (407) 629-6776
www.mjsdesignersgroup.com

COPYRIGHT NOTICE: THESE PLANS, DESIGNS, AND IDEAS ARE THE EXCLUSIVE INTELLECTUAL PROPERTY OF MJS, INC. ALL RIGHTS RESERVED.

MJS designers group
residential-commercial-architecture

AIBD

GOBA
GREATER ORLANDO BUILDERS ASSOCIATION

A division of Park Square Enterprises Inc.
5200 Vineland Rd. Suite #200
Orlando, Fl. 32811
Phone: (407) 529-3000

Park Square HOMES

ISSUE DATE	10/17/2022
REVISIONS	
PROJECT:	22-1148
SCALE:	AS NOTED
DRAWN BY:	M.C.
DESIGNED BY:	MJS

SLAB PLAN

A1

© COPYRIGHT 2016 PARK SQUARE HOMES HEREBY RESERVES ITS COMMON LAW COPYRIGHTS IN THESE PLANS, IDEAS AND DESIGN. THESE PLANS, IDEAS AND DESIGNS ARE NOT TO BE COPIED OR MODIFIED IN ANY MATTER OR FORM WHATSOEVER, NOR ARE THEY TO BE ASSIGNED TO ANY THIRD PARTY WITHOUT FIRST OBTAINING THE EXPRESS WRITTEN PERMISSION FROM PARK SQUARE HOMES.

houzz FIND US ON FACEBOOK & HOUZZ AT MJS CUSTOM HOME DESIGNS

BXUV - Fire Resistance Ratings - ANSI/UL 263
BXUV7 - Fire Resistance Ratings - CAN/ULC-S101 Certified for Canada

See General Information for Fire-resistance Ratings - ANSI/UL 263
See General Information for Fire Resistance Ratings - CAN/ULC-S101 Certified for Canada

Design No. U905
March 11, 2016

Bearing Wall Rating — 2 HR.
Nonbearing Wall Rating — 2 HR

This design was evaluated using a load design method other than the Limit States Design Method (e.g., Working Stress Design Method). For jurisdictions employing the Limit States Design Method, such as Canada, a load restriction factor shall be used — See Guide BXUV or BXUV7

* Indicates such products shall bear the UL or cUL Certification Mark for jurisdictions employing the UL or cUL Certification (such as Canada), respectively.

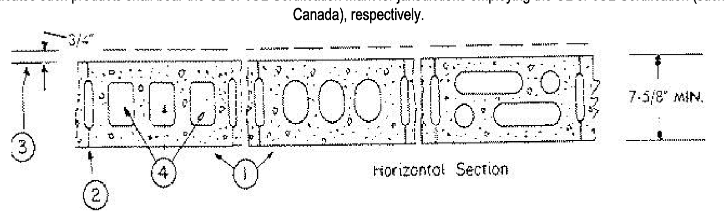

1. Concrete Blocks* — Various designs. Classification D-2 (2 hr). See Concrete Blocks category for list of eligible manufacturers.
2. Mortar — Blocks laid in full bed of mortar, nom. 3/8 in. thick, of not less than 2-1/4 and not more than 3-1/2 parts of clean sharp sand to 1 part Portland cement (proportioned by volume) and not more than 50 percent hydrated lime (by cement volume). Vertical joints staggered.
3. Portland Cement Stucco or Gypsum Plaster — Add 1/2 hr to classification if used. Where combustible members are framed in wall, plaster or stucco must be applied on the face opposite framing to achieve a max. Classification of 1-1/2 hr. Attached to concrete blocks (Item 1).
4. Loose Masonry Fill — If all core spaces are filled with loose dry expanded slag, expanded clay or shale (Rotary Kiln Process), water repellant vermiculite masonry fill insulation, or silicone treated perlite loose fill insulation add 2 hr to classification.
5. Foamed Plastic* — (Optional-Not Shown) — 1-1/2 in. thick max, 4 ft wide sheathing attached to concrete blocks (Item 1).
ATLAS ROOFING CORP — "EnergyShield Pro Wall Insulation" and "EnergyShield Pro 2 Wall Insulation"

CARLISLE COATINGS & WATERPROOFING INC — Type R2+ Sheath
FIRESTONE BUILDING PRODUCTS CO L L C — "Enverge™ CI Foil Exterior Wall Insulation" and "Enverge™ CI Glass Exterior Wall Insulation"
HUNTER PANELS — Types Xci-Class A, Xci 286
RMAX OPERATING L L C — "TSX-8500", "TSX-8510", "Thermasheath-XP", "ECOMAXci", "Thermasheath-3", "Durasheath-3"
THE DOW CHEMICAL CO — Types Thermax Sheathing, Thermax Light Duty Insulation, Thermax Heavy Duty Insulation, Thermax Metal Building Board, Thermax White Finish Insulation, Thermax ci Exterior Insulation, Thermax XARMOR ci Exterior Insulation, Thermax IH Insulation, Thermax Plus Liner Panel, Thermax Heavy Duty Plus (HDP) and TUFF-R™ ci Insulation
5A. Building Units — As an alternate to Items 5, min. 1-in thick polyisocyanurate composite foamed plastic insulation boards, nom. 48 by 48 or 96 in.
RMAX OPERATING L L C — "Thermasheath-SI", "ECOBASEci", "ThermaBase-CI"

* Indicates such products shall bear the UL or cUL Certification Mark for jurisdictions employing the UL or cUL Certification (such as Canada), respectively.
Last Updated on 2016-03-11

Design/System/Construction/Assembly Usage Disclaimer
•Authorities Having Jurisdiction should be consulted in all cases as to the particular requirements covering the installation and use of UL Certified products, equipment, system, devices, and materials. •Authorities Having Jurisdiction should be consulted before construction.
•Fire resistance assemblies and products are developed by the design submitter and have been investigated by UL for compliance with applicable requirements. The published information cannot always address every construction nuance encountered in the field.
•When field issues arise, it is recommended the first contact for assistance be the technical service staff provided by the product manufacturer noted for the design. Users of fire resistance assemblies are advised to consult the general Guide Information for each product category and each group of assemblies. The Guide Information includes specifics concerning alternate materials and alternate methods of construction.
•Only products which bear UL's Mark are considered Certified.
The appearance of a company's name or product in this database does not in itself assure that products so identified have been manufactured under UL's Follow-Up Service. Only those products bearing the UL Mark should be considered to be Certified and covered under UL's Follow-Up Service. Always look for the Mark on the product.
UL permits the reproduction of the material contained in the Online Certification Directory subject to the following conditions: 1. The Guide Information, Assemblies, Constructions, Designs, Systems, and/or Certifications (files) must be presented in their entirety and in a non-misleading manner, without any manipulation of the data (or drawings). 2. The statement "Reprinted from the Online Certifications Directory with permission from UL" must appear adjacent to the extracted material. In addition, the reprinted material must include a copyright notice in the following format: "© 2017 UL LLC".

ANSI/UL 263 DESIGN U905

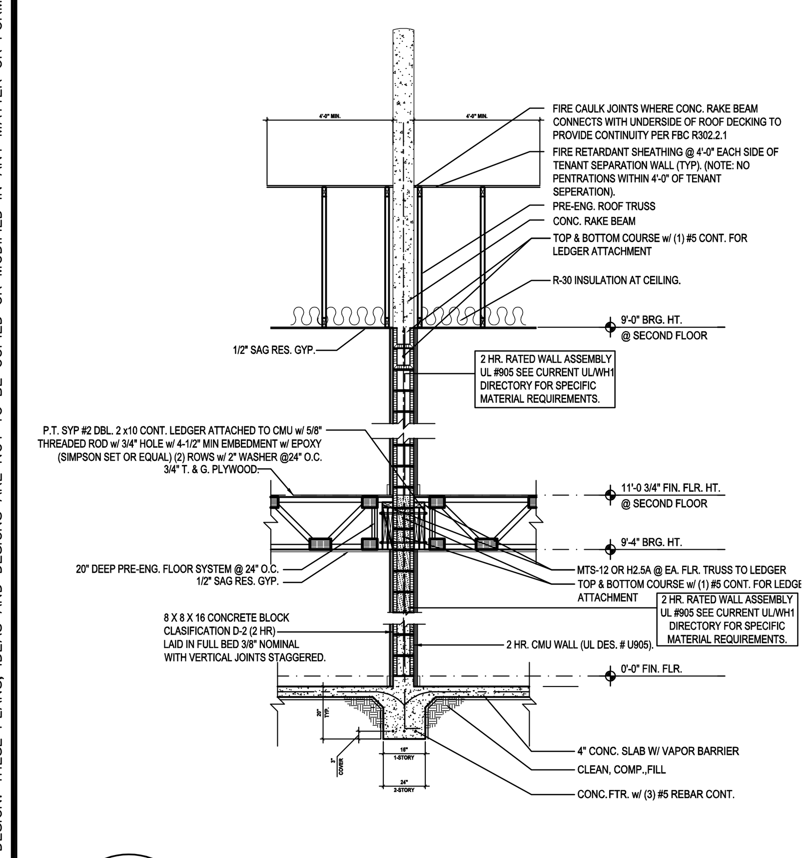

1/A1 **2 - Story Fire Wall**
SCALE: 1/4" = 1'-0"

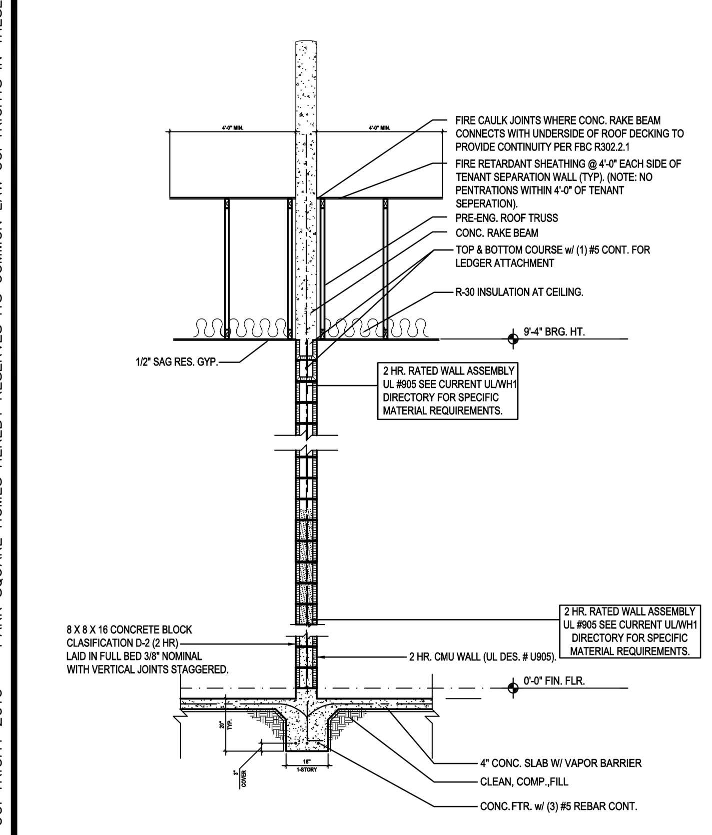

2/A1 **1 - Story Fire Wall**
SCALE: 1/4" = 1'-0"

FIND US ON FACEBOOK & HOUZZ AT MJS CUSTOM HOME DESIGNS

© COPYRIGHT 2016 PARK SQUARE HOMES HEREBY RESERVES ITS COMMON LAW COPYRIGHTS IN THESE PLANS, IDEAS AND DESIGN. THESE PLANS, IDEAS AND DESIGNS ARE NOT TO BE COPIED OR MODIFIED IN ANY MATTER OR FORM WHATSOEVER, NOR ARE THEY TO BE ASSIGNED TO ANY THIRD PARTY WITHOUT FIRST OBTAINING THE EXPRESS WRITTEN PERMISSION FROM PARK SQUARE HOMES.

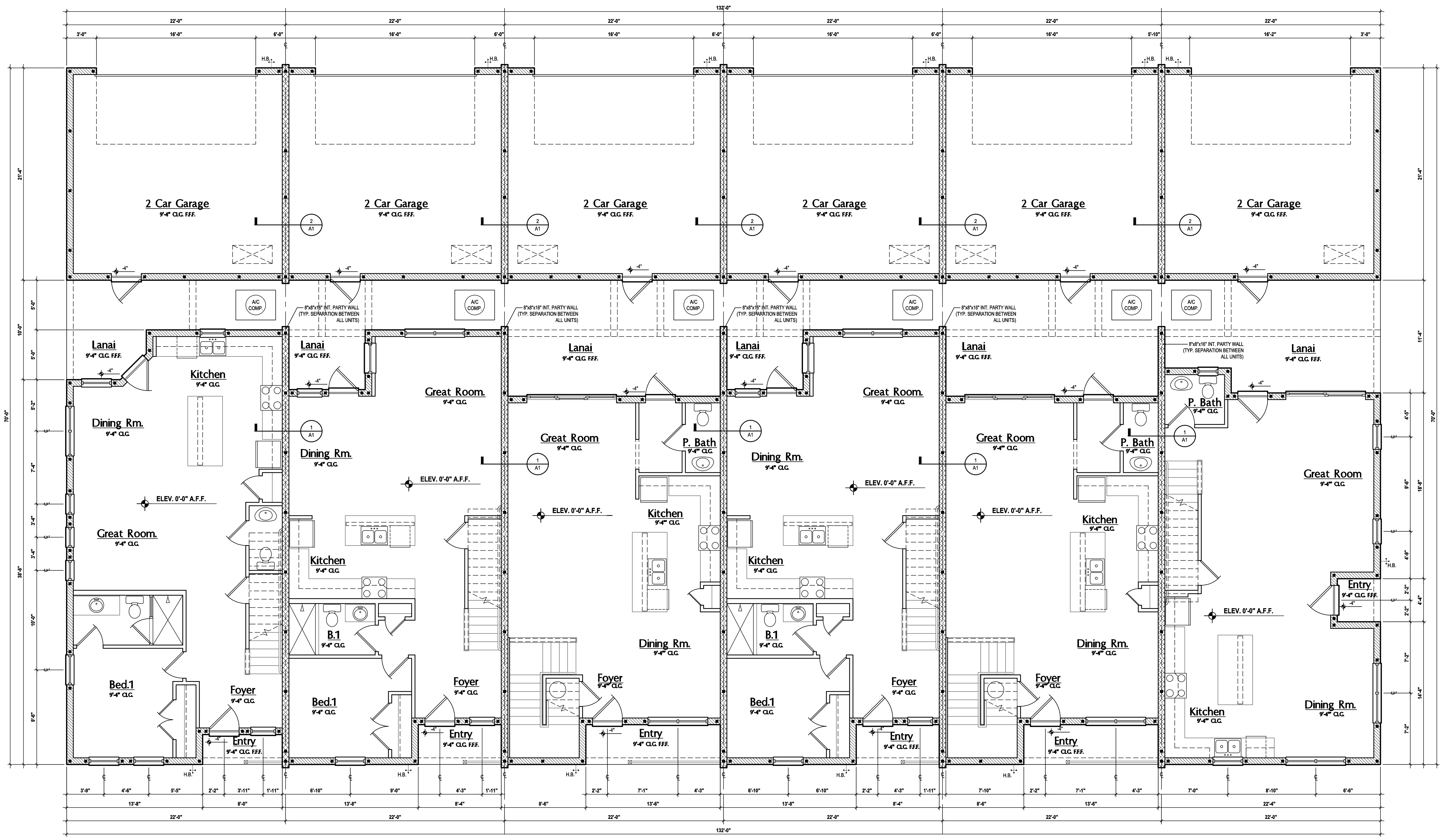

Tyler	Jackson	Grant	Jackson	Grant	Monroe
Unit-A: LOT# XX	Unit-B: LOT# XX	Unit-C: LOT# XX	Unit-B: LOT# XX	Unit-C: LOT# XX	Unit-D: LOT# XX

GENERAL NOTES KEY:

ABBREVIATIONS:
(2) INDICATES NUMBER OF DOORS.
(2) INDICATES NUMBER OF WINDOWS.
MT - METAL THRESHOLD
FR - FRENCH DOORS
SL - SIDE LIGHT
FG - FIXED GLASS
TR - TRANSOM
GB - GLASS BLOCK
PKT - POCKET DOOR
SVC - SERVICE DOOR
OBS - OBSCURED GLASS
TEMP - TEMPERED GLASS
SH - SINGLE HUNG
DH - DOUBLE HUNG
CSMT- CASEMENT
HR - HORIZONTAL ROLLER
BP - BYPASS
BF - BIFOLD
TYP. - TYPICAL

NOTES:
1. CONTRACTOR TO VERIFY ALL DIMENSIONS ON JOB SITE.
2. DO NOT SCALE PRINTS! CONSTRUCTION TO BE FROM CALCULATED DIMENSIONS ONLY. ANY DISCREPANCIES OR ERRORS TO BE REPORTED PROMPTLY TO SUPERVISOR FOR CLARIFICATION.
3. MECHANICAL EQUIP. LOCATIONS WILL BE DETERMINED BY COMMUNITY AND COUNTY CODES.
4. A/C CONDENSER UNIT TO BE ANCHORED TO SLAB PER CODE M307.2 & M1309.3.
5. PROVIDE RECESS H&C WATER W/ DRAIN @ WASHER SPACE.
6. VENT DRYER THRU EXTERIOR WALL U.N.O.
7. PROVIDE COLD WATER LINE FOR ICE MAKER LINE @ REF. SPACE.
8. PROVIDE RECESS H&C WATER W/ DRAIN @ WASHER SPACE.
9. SAG RESISTANT DRYWALL ON ALL CEILINGS.
10. PULL ALL DIMENSIONS FROM THE REAR OF PLAN.
11. REFER TO EXTERIOR ELEVATIONS & TYP. DETAIL SHEETS FOR EXTERIOR WALL FINISH SPEC'S.
12. REFER TO DETAIL SHEETS FOR FLASHING REQUIREMENTS AT ALL WOOD TO MASONRY INTERFACES.
13. ALL INTERIOR FRAME WALL DIMENSIONS TO BE 3 1/2" U.N.O.
14. ALL EXTERIOR BLOCK WALL DIMENSIONS TO BE 7 1/2" U.N.O.
15. ALL INT. FIRST FLOOR CEILINGS AT 9'-4" U.N.O.
•• ALL INT. SECOND FLOOR CEILINGS AT 9'-0" U.N.O.
16. C.M.U. & FRAME WALL SYSTEM SEGMENTS WHICH HAVE AN UNINTERRUPTED LENGTH OF 12'-0" OR MORE SHALL BE CONSIDERED SHEAR WALL SWS = SHEAR WALL SEGMENTS.
17. THE GARAGE SHALL BE SEPARATED AS REQUIRED BY TABLE R302.6. OPENINGS IN GARAGE WALLS SHALL COMPLY WITH SECTION R302.5. ATTACHMENT OF GYPSUM BOARD SHALL COMPLY WITH TABLE R702.3.5. THE WALL SEPARATION PROVISIONS OF TABLE R302.6 SHALL NOT APPLY TO GARAGE WALLS THAT ARE PERPENDICULAR TO THE ADJACENT DWELLING UNIT WALL.
18. OPENING BETWEEN GARAGE AND RESIDENCE SHALL BE EQUIPPED w/ A 20 MIN. FIRE RATED SOLID WOOD OR HONEYCOMB CORE STEEL DOOR NOT LESS THAN 1 3/8" THICKNESS AS PER FBC-R302.5.1.
19. INSTALL 5/8" TYPE X DRYWALL ON GARAGE CEILING BENEATH HABITABLE ROOMS (TYP.)
20. ENCLOSED SPACE UNDER STAIRS THAT IS ACCESSED BY A DOOR OR ACCESS PANEL SHALL HAVE WALLS, UNDER-STAIR SURFACE AND ANY SOFFITS PROTECTED ON THE ENCLOSED SIDE WITH 1/2-INCH (12.7 MM) GYPSUM BOARD.
21. *GARAGE DOOR TO BE CERTIFIED BY MFR. FOR 140 M.P.H.*
22. *ALL TUB & SHOWER UNITS WILL HAVE ANTI-SCALDING DEVICES INSTALLED.*
23. ALL OPERABLE WINDOWS LOCATED MORE THAN 72" ABV. SURFACE BELOW SHALL HAVE THE LOWEST PORTION OF WINDOW CLEAR OPENING A MIN. OF 24" ABOVE FINISHED FLOOR BEING SERVER PER (FBC-R312.2).
24. *ALL INT. DOORS TO BE 6'-8" TALL U.N.O. OR PER BUILDER / CLIENT*
25. SPECIALTY WINDOWS/DOORS, FIXED GLASS WINDOWS, AND TRANSOMS ARE NOTED ON PLANS.
26. ALL DOORS & WINDOWS THAT ARE EGRESS WILL BE LABELED AS SUCH AND CONFORM TO FBC R310.2 EERO
27. SOIL TESTING IS RECOMMENDED, BUT IS NOT REQUIRED. THE DESIGN TEAM AT MJS & E.O.R STRONGLY RECOMMEND A SOIL TEST TO CONFIRM SOIL BEARING CAPACITY AND SURFACE GEO-TECHNICAL CONDITIONS. FOOTINGS SHALL BEAR ON UNDISTURBED SOIL A/O PROPERLY COMPACTED FILL (2000 PSF MIN.). FILL MATERIAL SHALL BE COMPACTED TO 95% DENSITY OF A STANDARD PROCTOR. TO BE VERIFIED BY GENERAL CONTRACTOR / OWNER.

DWELLING / GARAGE SEPARATION

1. OPENING BETWEEN GARAGE AND RESIDENCE SHALL BE EQUIPPED WITH A 20 MIN. FIRE RATED SOLID WOOD OR HONEYCOMB CORE STEEL DOOR NOT LESS THAN 1 3/8" THICKNESS AS PER FBC-R302.5.1.
2. 1/2" GYPSUM BOARD APPLIED TO THE GARAGE SIDE OF WALL TO UNDERSIDE OF DECKING.
3. 5/8" TYPE X DRYWALL ON GARAGE CEILING BELOW ANY HABITABLE SPACE
4. 1/2" GYPSUM BOARD APPLIED TO THE ACCESSIBLE AREA UNDER STAIR SURFACE AND SIDES.

WINDOW / DOOR NOTE KEY:

WINDOW SIZE CALLOUT:
2040 = 2'-0" x 4'-0"
2050 = 2'-0" x 5'-0"
2060 = 2'-0" x 6'-0"
- ALL WINDOW CALLOUTS ARE MEASURED IN FEET & INCHES AS PER THE EXAMPLE TABLE ABOVE.

DOOR SIZE CALLOUT:
20 = 2'-0" 40 B.F. = 4'-0" BI-FOLD
24 = 2'-4" 50 B.F. = 5'-0" BI-FOLD
26 = 2'-6" 60 B.F. = 6'-0" BI-FOLD
28 = 2'-8"
30 = 3'-0"
- ALL INTERIOR DOOR HEIGHTS ARE TO BE DETERMINED BY THE BUILDER.

BRG. HT. LEGEND

■ - INDICATES A CONCRETE FILLED CELL WITHIN AN 8" CMU WALL CONTAINING (1) VERT. #5 REBAR CONT. FROM FOUNDATION SLAB TO BOND BEAM. PROVIDE A MIN. OF 25" LAP ON ALL STEEL REINFORCING BARS. (MIN. REBAR GRADE 60.)

INDICATES BRG. WALL
FOUNDATION: 2-STORY BRG. FOOTING
9'-4" BRG. HT.
INDICATES 1-HR. FIREWALL
RAKED BM.
INDICATES 2-HR. FIREWALL

Area Tabulations

Living:		
1st floor:	4,993	sf
2nd floor:	5,388	sf
Total Living:	10,381	sf
entry:	223	sf
garage:	2,814	sf
lanai:	798	sf
Total Area:	14,216	sf

First Floor Overall
SCALE: 3/16" = 1'-0"

Oct 17, 2022, 10:28am Carlos V:\Park Square Homes\MODELS\TOWNHOME MODELS\Townhomes (Orlando)\1- Townhome Models\Rear Load Detached Towns (Raised Heel)\6-Unit\A2 First Floor Overall.dwg

THOMPSON ENGINEERING GROUP, INC.
4401 Vineland Road Suite A6 Orlando, FL. 32811
Ph: (407) 734-1450
Fax: (407) 734-1790
www.tegfl.com

815 Orienta Ave., Suite #1040
Altamonte Springs, Fl. 32701
Ph: (407) 629-6711
Fax: (407) 629-6776
www.mjsdesignersgroup.com

COPYRIGHT NOTICE: THESE PLANS, DESIGNS, AND IDEAS ARE THE EXCLUSIVE INTELLECTUAL PROPERTY OF MJS, INC. ALL RIGHTS RESERVED.

MJS designers group
residential·commercial·architecture

GOBA GREATER ORLANDO BUILDERS ASSOCIATION

6-Unit: Rear Load Detached
Models: Tyler, Jackson, Grant, Jackson, Grant & Monroe

Building Pad #XX
Lot# XX-XX, Subdivision
Street Address
City, State. Zip Code

A division of Park Square Enterprises Inc.
5200 Vineland Rd. Suite #200
Orlando, Fl. 32811
Phone: (407) 529-3000

Park Square HOMES

ISSUE DATE	10/17/2022
REVISIONS	
PROJECT:	22-1148
SCALE:	AS NOTED
DRAWN BY:	M.C.
DESIGNED BY:	MJS

FIRST FLOOR
A2

© COPYRIGHT 2016 PARK SQUARE HOMES HEREBY RESERVES ITS COMMON LAW COPYRIGHTS IN THESE PLANS, IDEAS AND DESIGN. THESE PLANS, IDEAS AND DESIGNS ARE NOT TO BE COPIED OR MODIFIED IN ANY MATTER OR FORM WHATSOEVER, NOR ARE THEY TO BE ASSIGNED TO ANY THIRD PARTY WITHOUT FIRST OBTAINING THE EXPRESS WRITTEN PERMISSION FROM PARK SQUARE HOMES.

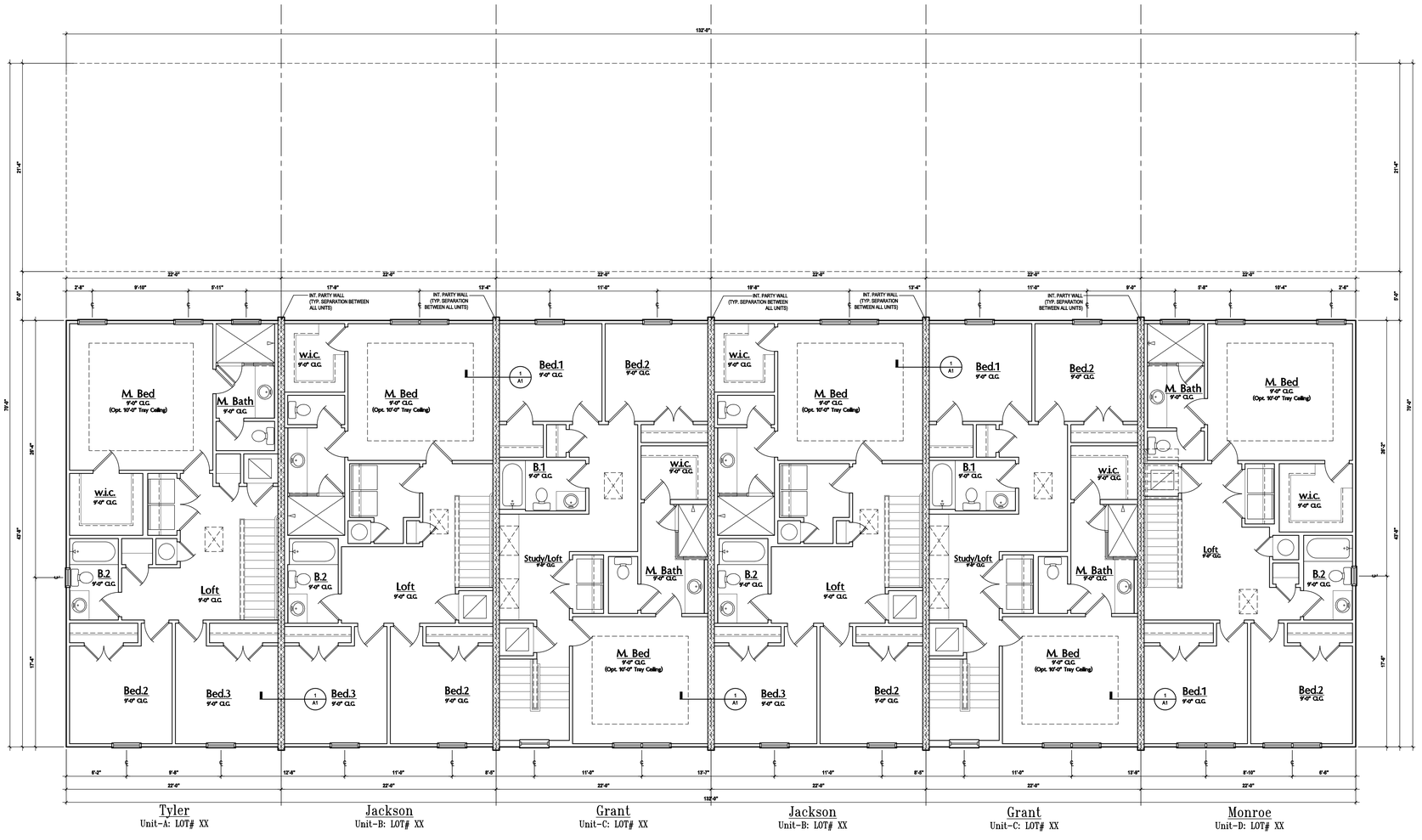

GENERAL NOTES KEY:

ABBREVIATIONS:
(2) INDICATES NUMBER OF DOORS.
(2) INDICATES NUMBER OF WINDOWS.
MT - METAL THRESHOLD
FR - FRENCH DOORS
SL - SIDE LIGHT
FG - FIXED GLASS
TR - TRANSOM
GB - GLASS BLOCK
PKT - POCKET DOOR
SVC - SERVICE DOOR
OBS - OBSCURED GLASS
TEMP - TEMPERED GLASS
SH - SINGLE HUNG
DH - DOUBLE HUNG
CSMT- CASEMENT
HR - HORIZONTAL ROLLER
BP - BYPASS
BF - BIFOLD
TYP. - TYPICAL

NOTES:
1. CONTRACTOR TO VERIFY ALL DIMENSIONS ON JOB SITE.
2. DO NOT SCALE PRINTS! CONSTRUCTION TO BE FROM CALCULATED DIMENSIONS ONLY. ANY DISCREPANCIES OR ERRORS TO BE REPORTED PROMPTLY TO SUPERVISOR FOR CLARIFICATION.
3. MECHANICAL EQUIP. LOCATIONS WILL BE DETERMINED BY COMMUNITY AND COUNTY CODES.
4. A/C CONDENSER UNIT TO BE ANCHORED TO SLAB PER CODE M307.2 & M1309.3.
5. PROVIDE RECESS H&C WATER W/ DRAIN @ WASHER SPACE.
6. VENT DRYER THRU EXTERIOR WALL U.N.O.
7. PROVIDE COLD WATER LINE FOR ICE MAKER LINE @ REF. SPACE.
8. PROVIDE RECESS H&C WATER W/ DRAIN @ WASHER SPACE.
9. SAG RESISTANT DRYWALL ON ALL CEILINGS.
10. PULL ALL DIMENSIONS FROM THE REAR OF PLAN.
11. REFER TO EXTERIOR ELEVATIONS & TYP. DETAIL SHEETS FOR EXTERIOR WALL FINISH SPEC'S.
12. REFER TO DETAIL SHEETS FOR FLASHING REQUIREMENTS AT ALL WOOD TO MASONRY INTERFACES.
13. ALL INTERIOR FRAME WALL DIMENSIONS TO BE 3 1/2" U.N.O.
14. ALL EXTERIOR BLOCK WALL DIMENSIONS TO BE 7 1/2" U.N.O.
15. ALL INT. FIRST FLOOR CEILINGS AT 9'-4" U.N.O.
    ** ALL INT. SECOND FLOOR CEILINGS AT 9'-0" U.N.O.
16. C.M.U. & FRAME WALL SYSTEM SEGMENTS WHICH HAVE AN UNINTERRUPTED LENGTH OF 12'-0" OR MORE SHALL BE CONSIDERED SHEAR WALL SWS = SHEAR WALL SEGMENTS.
17. THE GARAGE SHALL BE SEPARATED AS REQUIRED BY TABLE R302.6. OPENINGS IN GARAGE WALLS SHALL COMPLY WITH SECTION R302.5. ATTACHMENT OF GYPSUM BOARD SHALL COMPLY WITH TABLE R702.3.5. THE WALL SEPARATION PROVISIONS OF TABLE R302.6 SHALL NOT APPLY TO GARAGE WALLS THAT ARE PERPENDICULAR TO THE ADJACENT DWELLING UNIT WALL.
18. OPENING BETWEEN GARAGE AND RESIDENCE SHALL BE EQUIPPED w/ A 20 MIN. FIRE RATED SOLID WOOD OR HONEYCOMB CORE STEEL DOOR NOT LESS THAN 1 3/8" THICKNESS AS PER FBC-R302.5.1.
19. INSTALL 5/8" TYPE X DRYWALL ON GARAGE CEILING BENEATH HABITABLE ROOMS (TYP.)
20. ENCLOSED SPACE UNDER STAIRS THAT IS ACCESSED BY A DOOR OR ACCESS PANEL SHALL HAVE WALLS, UNDER-STAIR SURFACE AND ANY SOFFITS PROTECTED ON THE ENCLOSED SIDE WITH 1/2-INCH (12.7 MM) GYPSUM BOARD.
21. *GARAGE DOOR TO BE CERTIFIED BY MFR. FOR 140 M.P.H.*
22. *ALL TUB & SHOWER UNITS WILL HAVE ANTI-SCALDING DEVICES INSTALLED.*
23. ALL OPERABLE WINDOWS LOCATED MORE THAN 72" ABV. SURFACE BELOW SHALL HAVE THE LOWEST PORTION OF WINDOW CLEAR OPENING A MIN. OF 24" ABOVE FINISHED FLOOR BEING SERVER PER (FBC-R312.2).
24. *ALL INT. DOORS TO BE 6'-8" TALL U.N.O. OR PER BUILDER / CLIENT*
25. SPECIALTY WINDOWS/DOORS, FIXED GLASS WINDOWS, AND TRANSOMS ARE NOTED ON PLANS.
26. ALL DOORS & WINDOWS THAT ARE EGRESS WILL BE LABELED AS SUCH AND CONFORM TO FBC R310.2 EERO
27. SOIL TESTING IS RECOMMENDED, BUT IS NOT REQUIRED. THE DESIGN TEAM AT MJS & E.O.R STRONGLY RECOMMEND A SOIL TEST TO CONFIRM SOIL BEARING CAPACITY AND SURFACE GEO-TECHNICAL CONDITIONS. FOOTINGS SHALL BEAR ON UNDISTURBED SOIL A/O PROPERLY COMPACTED FILL (2000 PSF MIN.). FILL MATERIAL SHALL BE COMPACTED TO 95% DENSITY OF A STANDARD PROCTOR, TO BE VERIFIED BY GENERAL CONTRACTOR / OWNER.

DWELLING / GARAGE SEPARATION

1. OPENING BETWEEN GARAGE AND RESIDENCE SHALL BE EQUIPPED WITH A 20 MIN. FIRE RATED SOLID WOOD OR HONEYCOMB CORE STEEL DOOR NOT LESS THAN 1 3/8" THICKNESS AS PER FBC-R302.5.1.
2. 1/2" GYPSUM BOARD APPLIED TO THE GARAGE SIDE OF WALL TO UNDERSIDE OF DECKING.
3. 5/8" TYPE X DRYWALL ON GARAGE CEILING BELOW ANY HABITABLE SPACE
4. 1/2" GYPSUM BOARD APPLIED TO THE ACCESSIBLE AREA UNDER STAIR SURFACE AND SIDES.

WINDOW / DOOR NOTE KEY:

WINDOW SIZE CALLOUT:
2040 = 2'-0" x 4'-0"
2050 = 2'-0" x 5'-0"
2060 = 2'-0" x 6'-0"
- ALL WINDOW CALLOUTS ARE MEASURED IN FEET & INCHES AS PER THE EXAMPLE TABLE ABOVE.

DOOR SIZE CALLOUT:
20 = 2'-0" 40 B.F. = 4'-0" BI-FOLD
24 = 2'-4" 50 B.F. = 5'-0" BI-FOLD
26 = 2'-6" 60 B.F. = 6'-0" BI-FOLD
28 = 2'-8"
30 = 3'-0"
- ALL INTERIOR DOOR HEIGHTS ARE TO BE DETERMINED BY THE BUILDER.

BRG. HT. LEGEND

■ - INDICATES A CONCRETE FILLED CELL WITHIN AN 8" CMU WALL CONTAINING (1) VERT. #5 REBAR CONT. FROM FOUNDATION SLAB TO BOND BEAM. PROVIDE A MIN. OF 25" LAP ON ALL STEEL REINFORCING BARS. (MIN. REBAR GRADE 60.)

INDICATES BRG. WALL
FOUNDATION: 2-STORY BRG. FOOTING
9'-4" BRG. HT.
INDICATES 1-HR. FIREWALL
RAKED BM.
INDICATES 2-HR. FIREWALL

Second Floor Overall

SCALE: 3/16" = 1'-0"

THOMPSON ENGINEERING GROUP, INC.
4401 Vineland Road Suite #5 Orlando, FL 32811
Ph: (407) 734-1450
Fax: (407) 734-1790
www.engfl.com

815 Orienta Ave., Suite #1040
Altamonte Springs, Fl. 32701
Ph: (407) 629-6711
Fax: (407) 629-6776
www.mjsdesignersgroup.com
COPYRIGHT NOTICE: THESE PLANS, DESIGNS, AND IDEAS ARE THE EXCLUSIVE INTELLECTUAL PROPERTY OF MJS, INC. ALL RIGHTS RESERVED

MJS designers group
residential-commercial-architecture

ALL BD

GOBA
GREATER ORLANDO BUILDERS ASSOCIATION

6-Unit: Rear Load Detached

Models: Tyler, Jackson, Grant, Jackson, Grant & Monroe

Building Pad #XX
Lot# XX-XX, Subdivision
Street Address
City, State. Zip Code

A division of Park Square Enterprises Inc.
5200 Vineland Rd. Suite #200
Orlando, Fl. 32811
Phone: (407) 529-3000

Park Square HOMES

ISSUE DATE	10/17/2022
REVISIONS	
PROJECT:	22-1148
SCALE:	AS NOTED
DRAWN BY:	M.C.
DESIGNED BY:	MJS

Carlos V:\Park Square Homes\MODELS\TOWNHOME MODELS\Townhomes (Orlando)\1- Townhome Models\Rear Load Detached Towns (Raised Heel)\6-Unit\A3 Second Floor Overall.dwg
Oct 17, 2022, 10:28am

SECOND FLOOR
A3

FIND US ON FACEBOOK & HOUZZ AT MJS CUSTOM HOME DESIGNS

© COPYRIGHT 2016 PARK SQUARE HOMES HEREBY RESERVES ITS COMMON LAW COPYRIGHTS IN THESE PLANS, IDEAS AND DESIGN. THESE PLANS, IDEAS AND DESIGNS ARE NOT TO BE COPIED OR MODIFIED IN ANY MATTER OR FORM WHATSOEVER, NOR ARE THEY TO BE ASSIGNED TO ANY THIRD PARTY WITHOUT FIRST OBTAINING THE EXPRESS WRITTEN PERMISSION FROM PARK SQUARE HOMES.

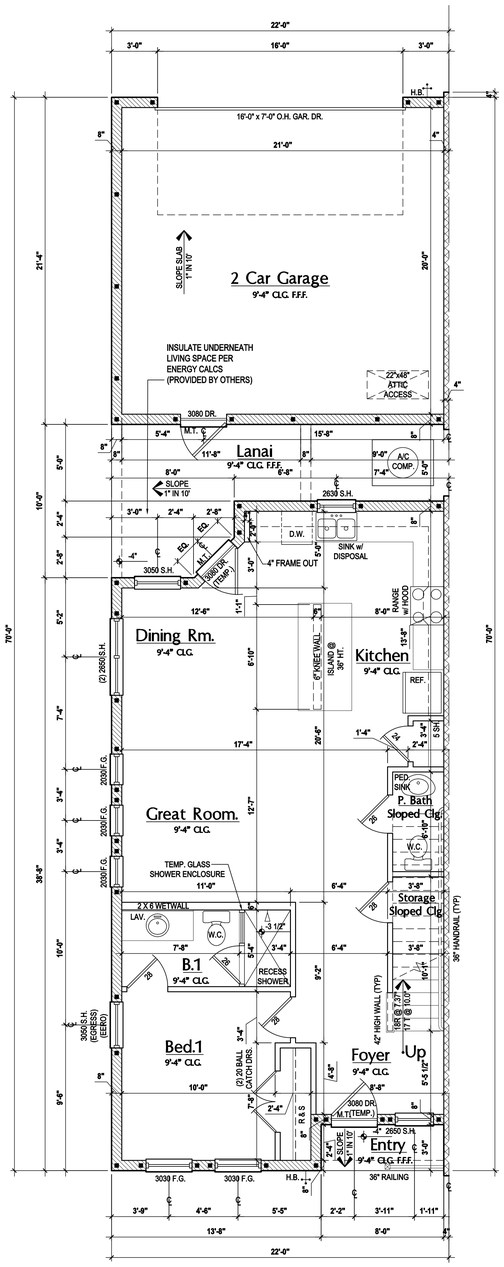

Tyler: First Floor

SCALE: 1/4" = 1'-0"

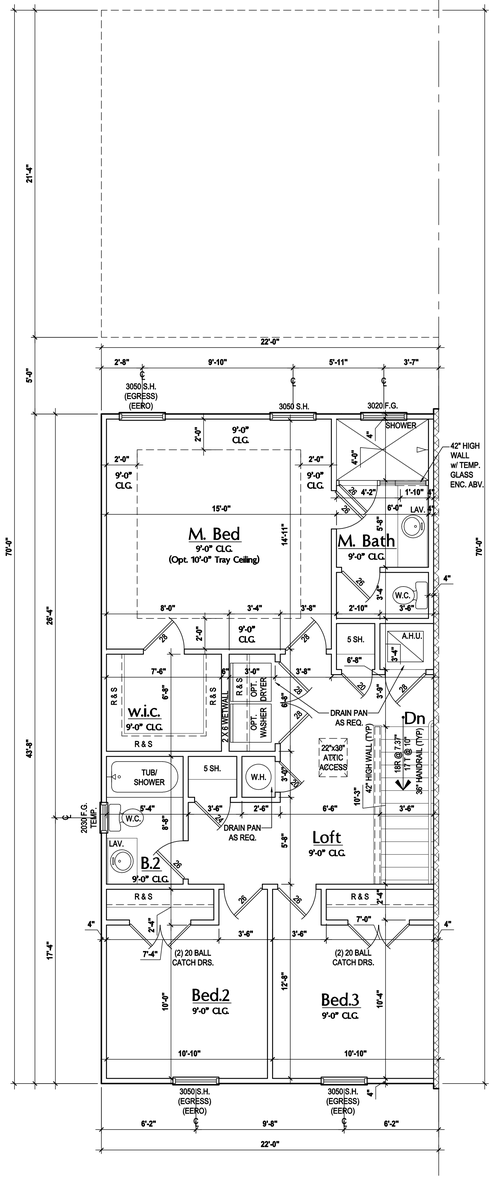

Tyler: Second Floor

SCALE: 1/4" = 1'-0"

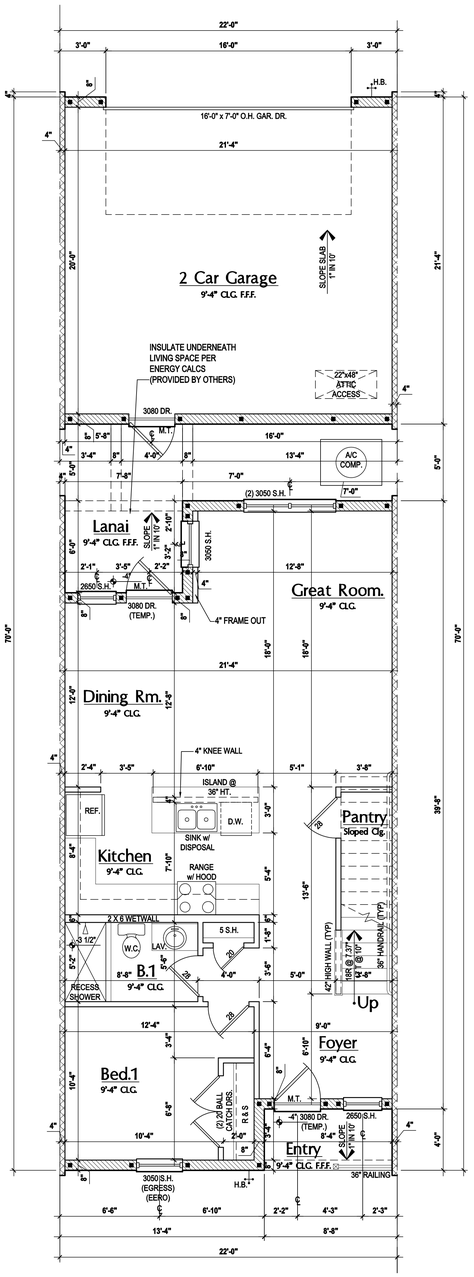

Jackson: First Floor

SCALE: 1/4" = 1'-0"

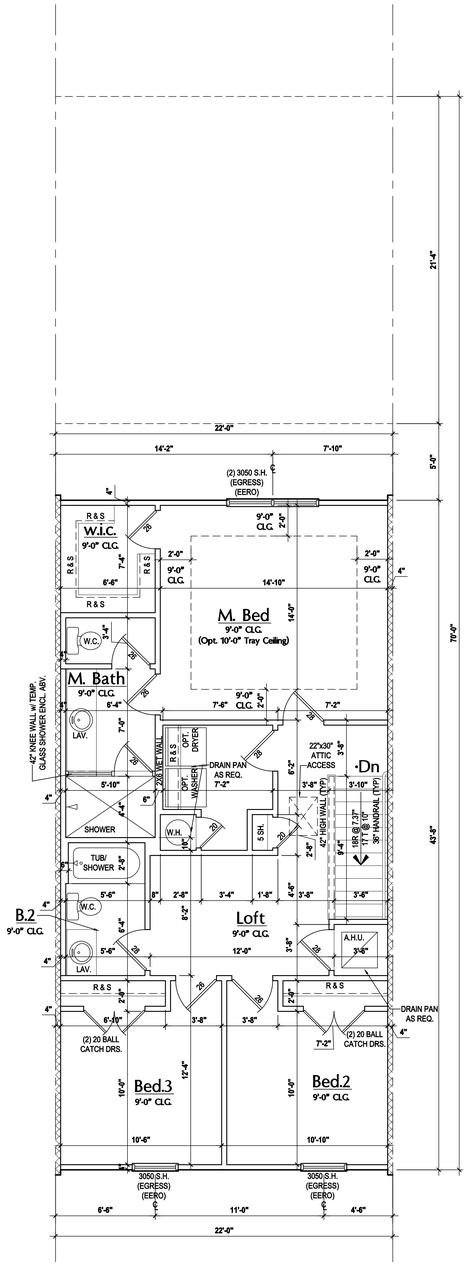

Jackson: Second Floor

SCALE: 1/4" = 1'-0"

Area Tabulations

Living:	Tyler Unit
1st floor:	899 sf
2nd floor:	906 sf
Total Living:	1,805 sf
entry:	24 sf
garage:	469 sf
lanai:	102 sf
Total Area:	2,400 sf

Floor Plan

SCALE: 1/4" = 1'-0"

GENERAL NOTES KEY:

ABBREVIATIONS:
(2) INDICATES NUMBER OF DOORS.
(2) INDICATES NUMBER OF WINDOWS.
MT - METAL THRESHOLD
FR - FRENCH DOORS
SL - SIDE LIGHT
FG - FIXED GLASS
TR - TRANSOM
GB - GLASS BLOCK
PKT - POCKET DOOR
SVC - SERVICE DOOR
OBS - OBSCURED GLASS
TEMP - TEMPERED GLASS
SH - SINGLE HUNG
DH - DOUBLE HUNG
CSMT- CASEMENT
HR - HORIZONTAL ROLLER
BP - BYPASS
BF - BIFOLD
TYP. - TYPICAL

NOTES:
1. CONTRACTOR TO VERIFY ALL DIMENSIONS ON JOB SITE.
2. DO NOT SCALE PRINTS! CONSTRUCTION TO BE FROM CALCULATED DIMENSIONS ONLY. ANY DISCREPANCIES OR ERRORS TO BE REPORTED PROMPTLY TO SUPERVISOR FOR CLARIFICATION.
3. MECHANICAL EQUIP. LOCATIONS WILL BE DETERMINED BY COMMUNITY AND COUNTY CODES.
4. A/C CONDENSER UNIT TO BE ANCHORED TO SLAB PER CODE M307.2 & M1309.3.
5. PROVIDE RECESS H&C WATER W/ DRAIN @ WASHER SPACE.
6. VENT DRYER THRU EXTERIOR WALL U.N.O.
7. PROVIDE COLD WATER LINE FOR ICE MAKER LINE @ REF. SPACE.
8. PROVIDE RECESS H&C WATER W/ DRAIN @ WASHER SPACE.
9. SAG RESISTANT DRYWALL ON ALL CEILINGS.
10. PULL ALL DIMENSIONS FROM THE REAR OF PLAN.
11. REFER TO EXTERIOR ELEVATIONS & TYP. DETAIL SHEETS FOR EXTERIOR WALL FINISH SPEC'S.
12. REFER TO DETAIL SHEETS FOR FLASHING REQUIREMENTS AT ALL WOOD TO MASONRY INTERFACES.
13. ALL INTERIOR FRAME WALL DIMENSIONS TO BE 3 ½" U.N.O.
14. ALL EXTERIOR BLOCK WALL DIMENSIONS TO BE 7 ⅝" U.N.O.
15. ALL INT. FIRST FLOOR CEILINGS AT 9'-4" U.N.O.
    ALL INT. SECOND FLOOR CEILINGS AT 9'-0" U.N.O.
16. C.M.U. & FRAME WALL SYSTEM SEGMENTS WHICH HAVE AN UNINTERRUPTED LENGTH OF 12'-0" OR MORE SHALL BE CONSIDERED SHEAR WALL SWS = SHEAR WALL SEGMENTS.
17. THE GARAGE SHALL BE SEPARATED AS REQUIRED BY TABLE R302.6. OPENINGS IN GARAGE WALLS SHALL COMPLY WITH SECTION R302.5. ATTACHMENT OF GYPSUM BOARD SHALL COMPLY WITH TABLE R702.3.5. THE WALL SEPARATION PROVISIONS OF TABLE R302.6 SHALL NOT APPLY TO GARAGE WALLS THAT ARE PERPENDICULAR TO THE ADJACENT DWELLING UNIT WALL.
18. OPENING BETWEEN GARAGE AND RESIDENCE SHALL BE EQUIPPED W/ A 20 MIN. FIRE RATED SOLID WOOD OR HONEYCOMB CORE STEEL DOOR NOT LESS THAN 1 3/8" THICKNESS AS PER FBC-R302.5.1.
19. INSTALL 5/8" TYPE X DRYWALL ON GARAGE CEILING BENEATH HABITABLE ROOMS (TYP.)
20. ENCLOSED SPACE UNDER STAIRS THAT IS ACCESSED BY A DOOR OR ACCESS PANEL SHALL HAVE WALLS, UNDER-STAIR SURFACE AND ANY SOFFITS PROTECTED ON THE ENCLOSED SIDE WITH 1/2-INCH (12.7 MM) GYPSUM BOARD.
21. *GARAGE DOOR TO BE CERTIFIED BY MFR. FOR 140 M.P.H.*
22. *ALL TUB & SHOWER UNITS WILL HAVE ANTI-SCALDING DEVICES INSTALLED.*
23. ALL OPERABLE WINDOWS LOCATED MORE THAN 72" ABV. SURFACE BELOW SHALL HAVE THE LOWEST PORTION OF WINDOW CLEAR OPENING A MIN. OF 24" ABOVE FINISHED FLOOR BEING SERVER PER (FBC-R312.2).
24. *ALL INT. DOORS TO BE 6'-8" TALL U.N.O. OR PER BUILDER / CLIENT.*
25. SPECIALTY WINDOWS/DOORS, FIXED GLASS WINDOWS, AND TRANSOMS ARE NOTED ON PLANS.
26. ALL DOORS & WINDOWS THAT ARE EGRESS WILL BE LABELED AS SUCH AND CONFORM TO FBC R310.2 EERO
27. SOIL TESTING IS RECOMMENDED, BUT IS NOT REQUIRED. THE DESIGN TEAM AT MJS & E.O.R STRONGLY RECOMMEND A SOIL TEST TO CONFIRM SOIL BEARING CAPACITY AND SURFACE GEO-TECHNICAL CONDITIONS. FOOTINGS SHALL BEAR ON UNDISTURBED SOIL A/O PROPERLY COMPACTED FILL. (2000 PSF MIN.). FILL MATERIAL SHALL BE COMPACTED TO 95% DENSITY OF A STANDARD PROCTOR. TO BE VERIFIED BY GENERAL CONTRACTOR / OWNER.

DWELLING / GARAGE SEPARATION

1. OPENING BETWEEN GARAGE AND RESIDENCE SHALL BE EQUIPPED WITH A 20 MIN. FIRE RATED SOLID WOOD OR HONEYCOMB CORE STEEL DOOR NOT LESS THAN 1 3/8" THICKNESS AS PER FBC-R302.5.1.
2. 1/2" GYPSUM BOARD APPLIED TO THE GARAGE SIDE OF WALL TO UNDERSIDE OF DECKING.
3. 5/8" TYPE X DRYWALL ON GARAGE CEILING BELOW ANY HABITABLE SPACE
4. 1/2" GYPSUM BOARD APPLIED TO THE ACCESSIBLE AREA UNDER STAIR SURFACE AND SIDES.

WINDOW / DOOR NOTE KEY:

WINDOW SIZE CALLOUT:
2040 = 2'-0" x 4'-0"
2050 = 2'-0" x 5'-0"
2060 = 2'-0" x 6'-0"
- ALL WINDOW CALLOUTS ARE MEASURED IN FEET & INCHES AS PER THE EXAMPLE TABLE ABOVE.

DOOR SIZE CALLOUT:
20 = 2'-0" 40 B.F. = 4'-0" BI-FOLD
24 = 2'-4" 50 B.F. = 5'-0" BI-FOLD
26 = 2'-6" 60 B.F. = 6'-0" BI-FOLD
28 = 2'-8"
30 = 3'-0"
- ALL INTERIOR DOOR HEIGHTS ARE TO BE DETERMINED BY THE BUILDER.

BRG. HT. LEGEND

■ - INDICATES A CONCRETE FILLED CELL WITHIN AN 8" CMU WALL CONTAINING (1) VERT. #5 REBAR CONT. FROM FOUNDATION SLAB TO BOND BEAM. PROVIDE A MIN. OF 25" LAP ON ALL STEEL REINFORCING BARS. (MIN. REBAR GRADE 60.)

INDICATES BRG. WALL
9'-4" BRG. HT.
RAKED BM.
FOUNDATION: 2-STORY BRG. FOOTING
INDICATES 1-HR. FIREWALL
INDICATES 2-HR. FIREWALL

Area Tabulations

Living:	Jackson Unit
1st floor:	878 sf
2nd floor:	906 sf
Total Living:	1,784 sf
entry:	35 sf
garage:	469 sf
lanai:	75 sf
Total Area:	2,363 sf

Floor Plan

SCALE: 1/4" = 1'-0"

THOMPSON ENGINEERING GROUP, INC.
4401 Vineland Road Suite A9 Orlando, FL. 32811
Ph: (407) 734-1790
Fax: (407) 734-1790
www.tegfl.com

MJS designers group
residential-commercial-architecture
815 Orienta Ave., Suite #1040
Altamonte Springs, Fl. 32701
Ph: (407) 629-6711
Fax: (407) 629-6776
www.mjsdesignersgroup.com

COPYRIGHT NOTICE: THESE PLANS, DESIGNS, AND IDEAS ARE THE EXCLUSIVE INTELLECTUAL PROPERTY OF MJS, INC. ALL RIGHTS RESERVED.

AIBD

GOBA
GREATER ORLANDO BUILDERS ASSOCIATION

6-Unit: Rear Load Detached

Models: Tyler, Jackson, Grant, Jackson, Grant & Monroe

Building Pad #XX
Lot# XX-XX, Subdivision
Street Address
City, State, Zip Code

A division of Park Square Enterprises Inc.
5200 Vineland Rd. Suite #200
Orlando, Fl. 32811
Phone: (407) 529-3000

Park Square HOMES

ISSUE DATE	10/17/2022
REVISIONS	
PROJECT:	22-1148
SCALE:	AS NOTED
DRAWN BY:	M.C.
DESIGNED BY:	MJS

FLOOR PLANS
A4

Oct 17, 2022, 10:28am Carlos V:\Park Square Homes\MODELS\TOWNHOME MODELS\Townhomes (Orlando)\1- Townhome Models\Rear Load Detached Towns (Raised Heel)\6-Unit\A4 Floor Plans (Tyler)(Jackson).dwg

FIND US ON FACEBOOK & HOUZZ AT MJS CUSTOM HOME DESIGNS

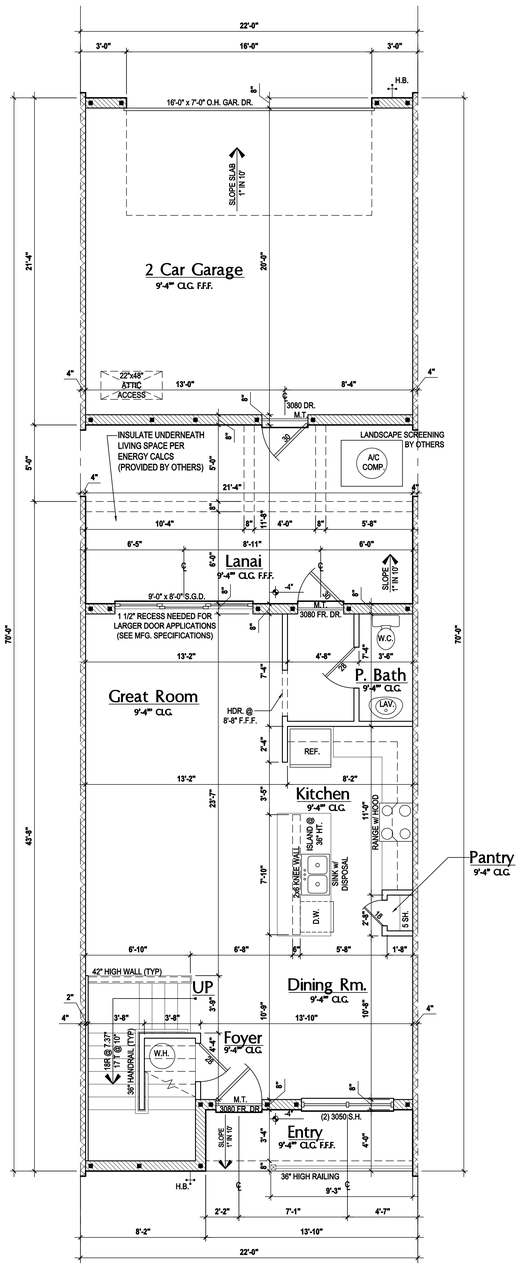

Grant: First Floor Plan

SCALE: 1/4" = 1'-0"

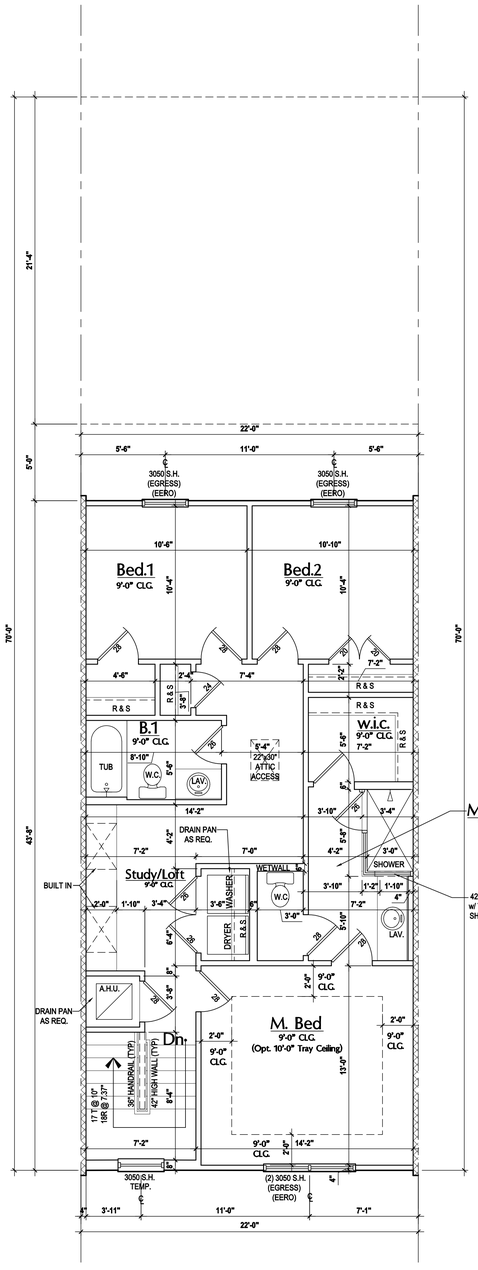

Grant: Second Floor Plan

SCALE: 1/4" = 1'-0"

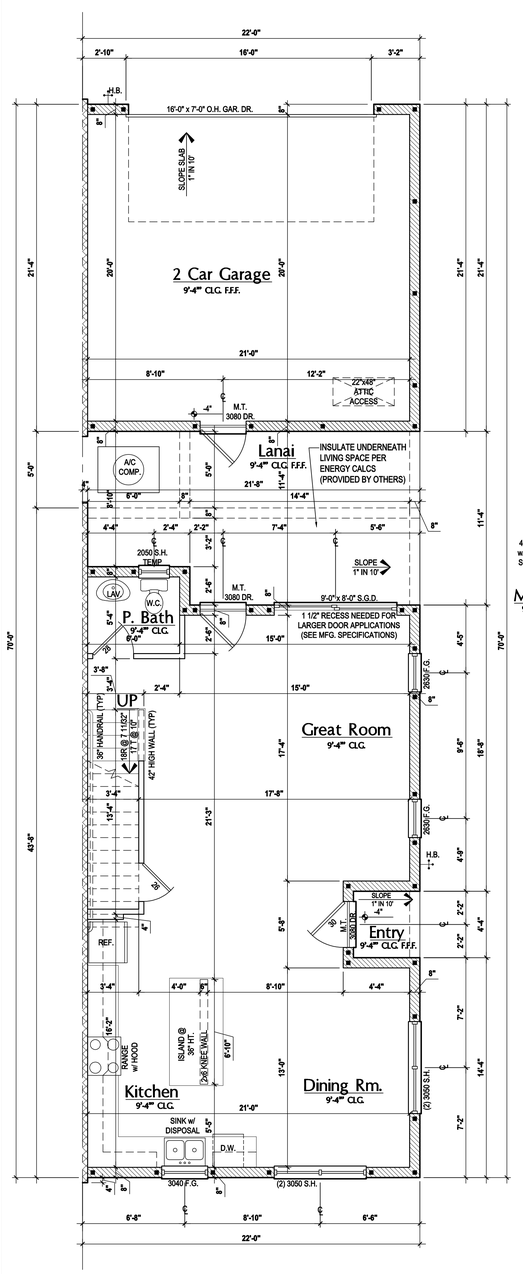

Monroe: First Floor Plan

SCALE: 1/4" = 1'-0"

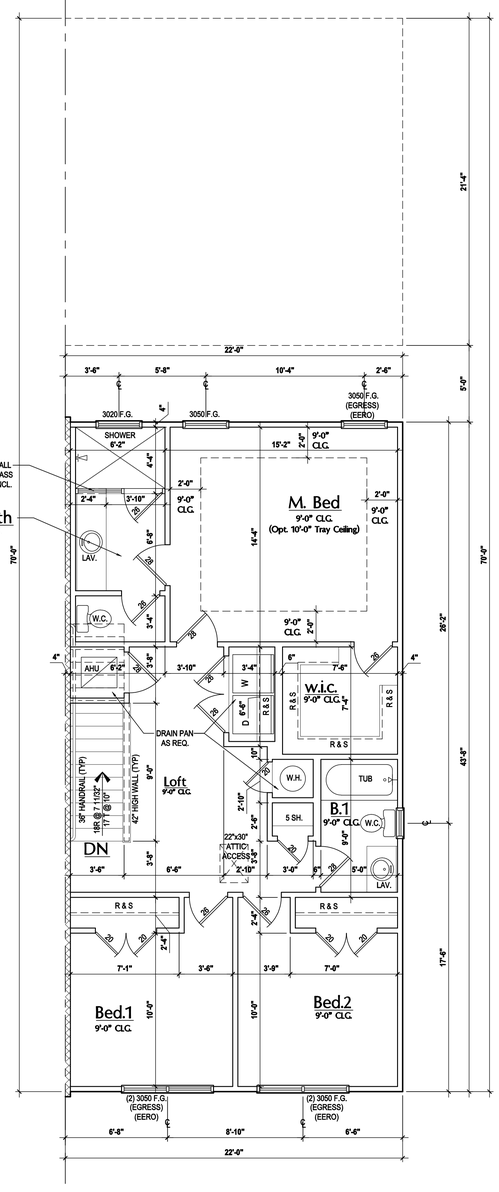

Monroe: Second Floor Plan

SCALE: 1/4" = 1'-0"

Area Tabulations

Living:	Grant Unit
1st floor:	759 sf
2nd floor:	879 sf
Total Living:	1,638 sf
entry:	55 sf
garage:	469 sf
lanai:	173 sf
Total Area:	2,335 sf

Floor Plan

SCALE: 1/4" = 1'-0"

GENERAL NOTES KEY:

ABBREVIATIONS:
(2) INDICATES NUMBER OF DOORS.
(2) INDICATES NUMBER OF WINDOWS.
MT - METAL THRESHOLD
FR - FRENCH DOORS
SL - SIDE LIGHT
FG - FIXED GLASS
TR - TRANSOM
GB - GLASS BLOCK
PKT - POCKET DOOR
SVC - SERVICE DOOR
OBS - OBSCURED GLASS
TEMP - TEMPERED GLASS
SH - SINGLE HUNG
DH - DOUBLE HUNG
CSMT- CASEMENT
HR - HORIZONTAL ROLLER
BP - BYPASS
BF - BIFOLD
TYP. - TYPICAL

NOTES:

1. CONTRACTOR TO VERIFY ALL DIMENSIONS ON JOB SITE.
2. DO NOT SCALE PRINTS! CONSTRUCTION TO BE FROM CALCULATED DIMENSIONS ONLY. ANY DISCREPANCIES OR ERRORS TO BE REPORTED PROMPTLY TO SUPERVISOR FOR CLASRIFICATION.
3. MECHANICAL EQUIP. LOCATIONS WILL BE DETERMINED BY COMMUNITY AND COUNTY CODES.
4. A/C CONDENSER UNIT TO BE ANCHORED TO SLAB PER CODE M307.2 & M1309.3.
5. PROVIDE RECESS H&C WATER W/ DRAIN @ WASHER SPACE.
6. VENT DRYER THRU EXTERIOR WALL U.N.O.
7. PROVIDE COLD WATER LINE FOR ICE MAKER LINE @ REF. SPACE.
8. PROVIDE RECESS H&C WATER W/ DRAIN @ WASHER SPACE.
9. SAG RESISTANT DRYWALL ON ALL CEILINGS.
10. PULL ALL DIMENSIONS FROM THE REAR OF PLAN.
11. REFER TO EXTERIOR ELEVATIONS & TYP. DETAIL SHEETS FOR EXTERIOR WALL FINISH SPEC'S.
12. REFER TO DETAIL SHEETS FOR FLASHING REQUIREMENTS AT ALL WOOD TO MASONRY INTERFACES.
13. ALL INTERIOR FRAME WALL DIMENSIONS TO BE 3 ½" U.N.O.
14. ALL EXTERIOR BLOCK WALL DIMENSIONS TO BE 7 ⅝" U.N.O.
15. ALL INT. FIRST FLOOR CEILINGS AT 9'-4" U.N.O.
    ALL INT. SECOND FLOOR CEILINGS AT 9'-0" U.N.O.
16. C.M.U. & FRAME WALL SYSTEM SEGMENTS WHICH HAVE AN UNINTERRUPTED LENGTH OF 12'-0" OR MORE SHALL BE CONSIDERED SHEAR WALL SWS = SHEAR WALL SEGMENTS.
17. THE GARAGE SHALL BE SEPARATED AS REQUIRED BY TABLE R302.6. OPENINGS IN GARAGE WALLS SHALL COMPLY WITH SECTION R302.5. ATTACHMENT OF GYPSUM BOARD SHALL COMPLY WITH TABLE R702.3.5. THE WALL SEPARATION PROVISIONS OF TABLE R302.6 SHALL NOT APPLY TO GARAGE WALLS THAT ARE PERPENDICULAR TO THE ADJACENT DWELLING UNIT WALL.
18. OPENING BETWEEN GARAGE AND RESIDENCE SHALL BE EQUIPPED w/ A 20 MIN. FIRE RATED SOLID WOOD OR HONEYCOMB CORE STEEL DOOR NOT LESS THAN 1 3/8" THICKNESS AS PER FBC-R302.5.1.
19. INSTALL 5/8" TYPE X DRYWALL ON GARAGE CEILING BENEATH HABITABLE ROOMS (TYP.)
20. ENCLOSED SPACE UNDER STAIRS THAT IS ACCESSED BY A DOOR OR ACCESS PANEL SHALL HAVE WALLS, UNDER-STAIR SURFACE AND ANY SOFFITS PROTECTED ON THE ENCLOSED SIDE WITH 1/2-INCH (12.7 MM) GYPSUM BOARD.
21. *GARAGE DOOR TO BE CERTIFIED BY MFR. FOR 140 M.P.H.*
22. *ALL TUB & SHOWER UNITS WILL HAVE ANTI-SCALDING DEVICES INSTALLED.*
23. ALL OPERABLE WINDOWS LOCATED MORE THAN 72" ABV. SURFACE BELOW SHALL HAVE THE LOWEST PORTION OF WINDOW CLEAR OPENING A MIN. OF 24" ABOVE FINISHED FLOOR BEING SERVER PER (FBC-R312.2).
24. *ALL INT. DOORS TO BE 6'-8" TALL U.N.O. OR PER BUILDER / CLIENT*
25. SPECIALTY WINDOWS/DOORS, FIXED GLASS WINDOWS, AND TRANSOMS ARE NOTED ON PLANS.
26. ALL DOORS & WINDOWS THAT ARE EGRESS WILL BE LABELED AS SUCH AND CONFORM TO FBC R310.2 EERO
27. SOIL TESTING IS RECOMMENDED, BUT IS NOT REQUIRED. THE DESIGN TEAM AT MJS & E.O.R STRONGLY RECOMMEND A SOIL TEST TO CONFIRM SOIL BEARING CAPACITY AND SURFACE GEO-TECHNICAL CONDITIONS. FOOTINGS SHALL BEAR ON UNDISTURBED SOIL A/O PROPERLY COMPACTED FILL (2000 PSF MIN.). FILL MATERIAL SHALL BE COMPACTED TO 95% DENSITY OF A STANDARD PROCTOR, TO BE VERIFIED BY GENERAL CONTRACTOR / OWNER.

DWELLING / GARAGE SEPARATION

1. OPENING BETWEEN GARAGE AND RESIDENCE SHALL BE EQUIPPED WITH A 20 MIN. FIRE RATED SOLID WOOD OR HONEYCOMB CORE STEEL DOOR NOT LESS THAN 1 3/8" THICKNESS AS PER FBC-R302.5.1.
2. 1/2" GYPSUM BOARD APPLIED TO THE GARAGE SIDE OF WALL TO UNDERSIDE OF DECKING.
3. 5/8" TYPE X DRYWALL ON GARAGE CEILING BELOW ANY HABITABLE SPACE
4. 1/2" GYPSUM BOARD APPLIED TO THE ACCESSIBLE AREA UNDER STAIR SURFACE AND SIDES.

WINDOW / DOOR NOTE KEY:

WINDOW SIZE CALLOUT:
2040 = 2'-0" x 4'-0"
2050 = 2'-0" x 5'-0"
2060 = 2'-0" x 6'-0"
- ALL WINDOW CALLOUTS ARE MEASURED IN FEET & INCHES AS PER THE EXAMPLE TABLE ABOVE.

DOOR SIZE CALLOUT:
20 = 2'-0" 40 B.F. = 4'-0" BI-FOLD
24 = 2'-4" 50 B.F. = 5'-0" BI-FOLD
26 = 2'-6" 60 B.F. = 6'-0" BI-FOLD
28 = 2'-8"
30 = 3'-0"
- ALL INTERIOR DOOR HEIGHTS ARE TO BE DETERMINED BY THE BUILDER.

BRG. HT. LEGEND

■ - INDICATES A CONCRETE FILLED CELL WITHIN AN 8" CMU WALL CONTAINING (1) VERT. #5 REBAR CONT. FROM FOUNDATION SLAB TO BOND BEAM. PROVIDE A MIN. OF 25" LAP ON ALL STEEL REINFORCING BARS. (MIN. REBAR GRADE 60.)

- INDICATES BRG. WALL
- 9'-4" BRG. HT.
- RAKED BM.
- FOUNDATION: 2-STORY BRG. FOOTING
- INDICATES 1-HR. FIREWALL
- INDICATES 2-HR. FIREWALL

Area Tabulations

Living:	Monroe Unit
1st floor:	820 sf
2nd floor:	912 sf
Total Living:	1,732 sf
entry:	19 sf
garage:	469 sf
lanai:	200 sf
Total Area:	2,420 sf

Floor Plan

SCALE: 1/4" = 1'-0"

© COPYRIGHT 2016 PARK SQUARE HOMES HEREBY RESERVES ITS COMMON LAW COPYRIGHTS IN THESE PLANS, IDEAS AND DESIGN. THESE PLANS, IDEAS AND DESIGNS ARE NOT TO BE COPIED OR MODIFIED IN ANY MATTER OR FORM WHATSOEVER, NOR ARE THEY TO BE ASSIGNED TO ANY THIRD PARTY WITHOUT FIRST OBTAINING THE EXPRESS WRITTEN PERMISSION FROM PARK SQUARE HOMES.

FIND US ON FACEBOOK & HOUZZ AT MJS CUSTOM HOME DESIGNS

THOMPSON ENGINEERING GROUP, INC.
4401 Vineland Road Suite A9 Orlando, FL. 32811
Phone: (407) 734-1790
Fax: (407) 734-1790
www.tegfl.com

MJS designers group
residential+commercial+architecture
815 Orienta Ave., Suite #1040
Altamonte Springs, Fl. 32701
Ph: (407) 629-6711
Fax: (407) 629-6776
www.mjsdesignersgroup.com

COPYRIGHT NOTICE: THESE PLANS, DESIGNS, AND IDEAS ARE THE EXCLUSIVE INTELLECTUAL PROPERTY OF MJS, INC. ALL RIGHTS RESERVED.

AIBD

GOBA
GREATER ORLANDO BUILDING ASSOCIATION

6-Unit: Rear Load Detached

Models: Tyler, Jackson, Grant, Jackson, Grant & Monroe

Building Pad #XX
Lot# XX-XX, Subdivision
Street Address
City, State, Zip Code

A division of Park Square Enterprises Inc.
5200 Vineland Rd, Suite #200
Orlando, Fl. 32811
Phone: (407) 529-3000

Park Square HOMES

ISSUE DATE	10/17/2022
REVISIONS	
PROJECT:	22-1148
SCALE:	AS NOTED
DRAWN BY:	M.C.
DESIGNED BY:	MJS

Oct 17, 2022, 10:29am C:\Carlos V:\Park Square Homes\MODELS\TOWNHOME MODELS\Townhomes (Orlando)\1- Townhome Models\Rear Load Detached Towns (Raised Heel)\6-Unit\A5 Floor Plans (Grant)(Monroe).dwg

FLOOR PLANS
A5

© COPYRIGHT 2016 PARK SQUARE HOMES HEREBY RESERVES ITS COMMON LAW COPYRIGHTS IN THESE PLANS, IDEAS AND DESIGN. THESE PLANS, IDEAS AND DESIGNS ARE NOT TO BE COPIED OR MODIFIED IN ANY MATTER OR FORM WHATSOEVER, NOR ARE THEY TO BE ASSIGNED TO ANY THIRD PARTY WITHOUT FIRST OBTAINING THE EXPRESS WRITTEN PERMISSION FROM PARK SQUARE HOMES.

Tyler
Unit-A: LOT# XX

Jackson
Unit-B: LOT# XX

Grant
Unit-D: LOT# XX

Jackson
Unit-C: LOT# XX

Grant
Unit-D: LOT# XX

Monroe
Unit-E: LOT# XX

Front Elevation 1

SCALE: 3/16" = 1'-0"

Rear Elevation: Garage

SCALE: 1/8" = 1'-0"

Left Elevation

SCALE: 1/8" = 1'-0"

Rear Elevation: Courtyard

SCALE: 1/8" = 1'-0"

Right Elevation

SCALE: 1/8" = 1'-0"

FIND US ON FACEBOOK & HOUZZ AT MJS CUSTOM HOME DESIGNS

TEG
THOMPSON ENGINEERING GROUP, INC.
4601 Vineland Road Suite #S Orlando, FL 32811
Ph: (407) 734-1450
Fax: (407) 734-1790
www.tegfl.com

815 Orienta Ave., Suite #1040
Altamonte Springs, Fl. 32701
Ph: (407) 629-6711
Fax: (407) 629-6776
www.mjsdesignersgroup.com
COPYRIGHT NOTICE: THESE PLANS, DESIGNS, AND IDEAS ARE THE EXCLUSIVE INTELLECTUAL PROPERTY OF MJS. INC. & ALL RIGHTS RESERVED.

MJS designers group
residential-commercial-architecture

AIBD

GOBA
GREATER ORLANDO BUILDERS ASSOCIATION

6-Unit: Rear Load Detached

Models: Tyler, Jackson, Grant, Jackson, Grant & Monroe

Building Pad #XX
Lot# XX-XX, Subdivision
Street Address
City, State, Zip Code

A division of Park Square Enterprises Inc.
5200 Vineland Rd. Suite #200
Orlando, Fl. 32811
Phone: (407) 529-3000

Park Square HOMES

ISSUE DATE	10/17/2022

REVISIONS

PROJECT:	22-1148
SCALE:	AS NOTED
DRAWN BY:	M.C.
DESIGNED BY:	MJS

Oct 17, 2022, 10:29am Carlos V:\Park Square Homes\MODELS\TOWNHOME MODELS\Townhomes (Orlando)\1- Townhome Models\Rear Load Detached Towns (Raised Heel)\6-Unit\A6 Elevations.dwg

ELEVATIONS
A6

Tyler
Unit-A: LOT# XX

Jackson
Unit-B: LOT# XX

Grant
Unit-D: LOT# XX

Jackson
Unit-C: LOT# XX

Grant
Unit-D: LOT# XX

Monroe
Unit-E: LOT# XX

Front Elevation 2

SCALE: 3/16" = 1'-0"

Rear Elevation: Garage

SCALE: 1/8" = 1'-0"

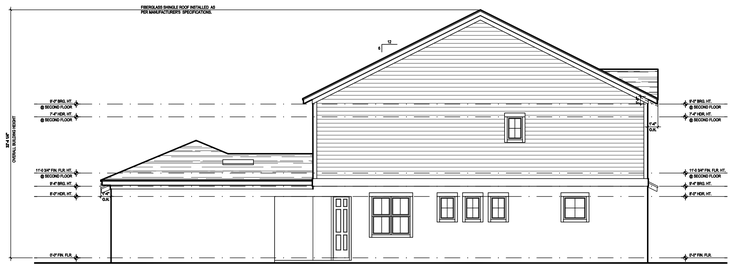

Left Elevation

SCALE: 1/8" = 1'-0"

Rear Elevation: Courtyard

SCALE: 1/8" = 1'-0"

Right Elevation

SCALE: 1/8" = 1'-0"

© COPYRIGHT 2016 PARK SQUARE HOMES HEREBY RESERVES ITS COMMON LAW COPYRIGHTS IN THESE PLANS, IDEAS AND DESIGN. THESE PLANS, IDEAS AND DESIGNS ARE NOT TO BE COPIED OR MODIFIED IN ANY MATTER OR FORM WHATSOEVER, NOR ARE THEY TO BE ASSIGNED TO ANY THIRD PARTY WITHOUT FIRST OBTAINING THE EXPRESS WRITTEN PERMISSION FROM PARK SQUARE HOMES.

houzz FIND US ON FACEBOOK & HOUZZ AT MJS CUSTOM HOME DESIGNS

THOMPSON ENGINEERING GROUP, INC.
4401 Vineland Road Suite #5 Orlando, FL 32811
Ph: (407) 734-1450
Fax: (407) 734-1790
www.segfl.com

MJS designers group
residential-commercial-architecture
815 Orienta Ave., Suite #1040
Altamonte Springs, Fl. 32701
Ph: (407) 629-6711
Fax: (407) 629-6776
www.mjsdesignersgroup.com

COPYRIGHT NOTICE: THESE PLANS, DESIGNS, AND IDEAS ARE THE EXCLUSIVE INTELLECTUAL PROPERTY OF MJS. THEY ARE ALL RIGHTS RESERVED.

AIBD

GOBA
GREATER ORLANDO BUILDERS ASSOCIATION

6-Unit: Rear Load Detached
Models: Tyler, Jackson, Grant, Jackson, Grant & Monroe

Building Pad #XX
Lot# XX-XX, Subdivision
Street Address
City, State. Zip Code

A division of Park Square Enterprises Inc.
5200 Vineland Rd. Suite #200
Orlando, Fl. 32811
Phone: (407) 529-3000

Park Square HOMES

ISSUE DATE	10/17/2022
REVISIONS	
PROJECT:	22-1148
SCALE:	AS NOTED
DRAWN BY:	M.C.
DESIGNED BY:	MJS

ELEVATIONS
A6.1

Carlos V:\Park Square Homes\MODELS\TOWNHOME MODELS\Townhomes (Orlando)\1- Townhome Models\Rear Load Detached Towns (Raised Heel)\6-Unit\A6 Elevations.dwg
Oct 17, 2022, 10:29am

© COPYRIGHT 2016 PARK SQUARE HOMES HEREBY RESERVES ITS COMMON LAW COPYRIGHTS IN THESE PLANS, IDEAS AND DESIGN. THESE PLANS, IDEAS AND DESIGNS ARE NOT TO BE COPIED OR MODIFIED IN ANY MATTER OR FORM WHATSOEVER, NOR ARE THEY TO BE ASSIGNED TO ANY THIRD PARTY WITHOUT FIRST OBTAINING THE EXPRESS WRITTEN PERMISSION FROM PARK SQUARE HOMES.

ATTIC VENT CALC'S.

RETENTION CALCULATIONS:
ROOF AREA: 9,516 SQ. FT.

AV VOLUME = (9,516/300) = 31.72 SQ. FT. / 2 = 15.86 SQ. FT.
15.86 x 144 = 2,283.84 SQ. IN.
1,697.04 SQ. IN / 98.75* = 23.12 VENTS NEEDED

AV REQUIRED: (24) VENTS NEEDED

2020 FLORIDA BUILDING CODE (7TH EDITION) SECTION R806
(OFF-RIDGE VENT MAXIMUM OPENING SIZES)

NOTE:
AS AN ALTERNATE TO TYP. ROOF INSUL. & VENTING A CLOSED ATTIC SYSTEM MAY BE SUBSTITUTED USING AN ICYNENE OR SIMM.

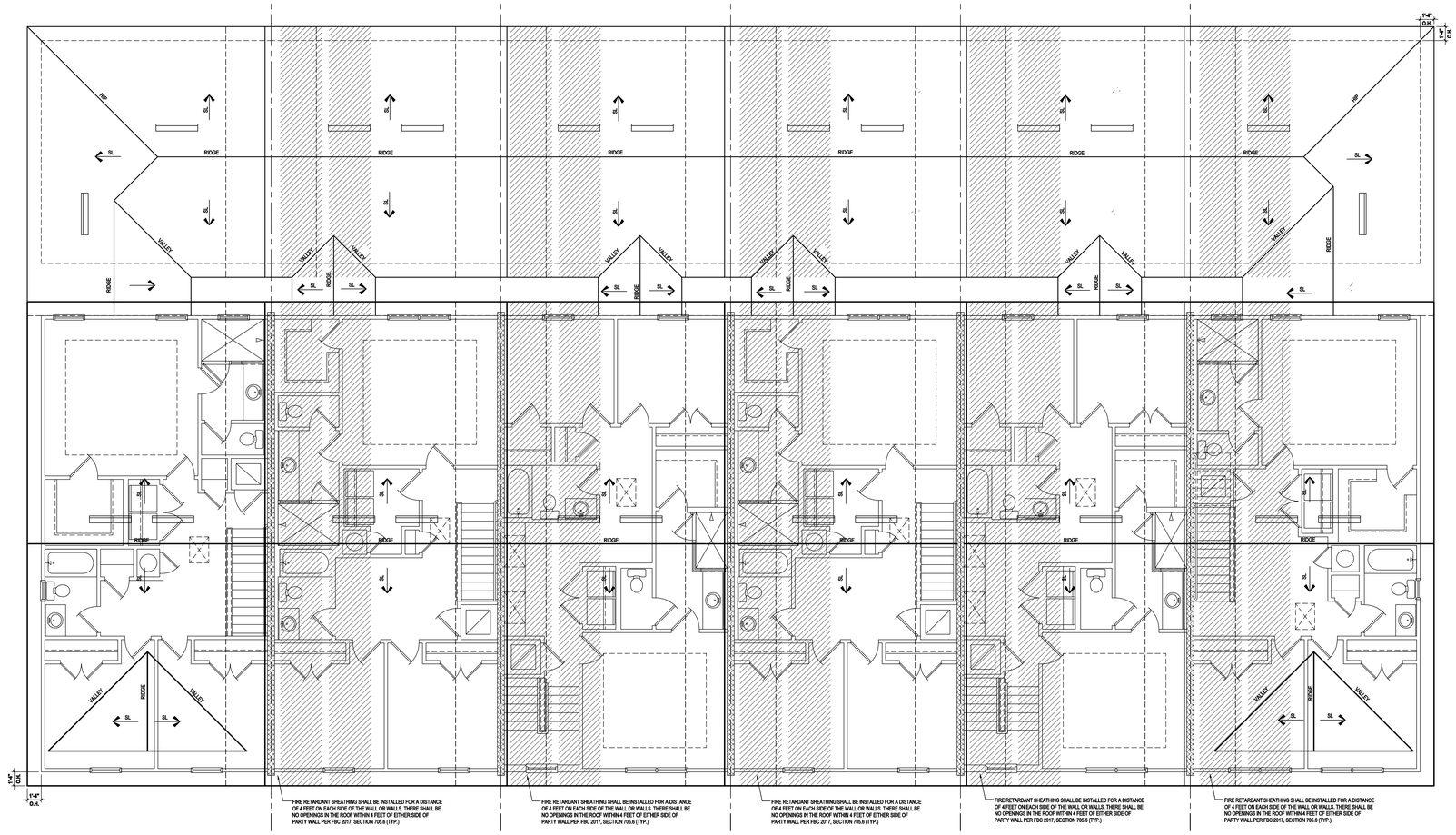

Elevation 1: Roof Layout

(Standard)

SCALE: 3/16" = 1'-0"

THOMPSON ENGINEERING GROUP, INC.
4401 Vineland Road Suite #5 Orlando, FL 32811
Ph: (407) 734-1450
Fax: (407) 734-1790
www.engfl.com

815 Orienta Ave., Suite #1040
Altamonte Springs, Fl. 32701
Ph: (407) 629-6711
Fax: (407) 629-6776
www.mjsdesignergroup.com

COPYRIGHT NOTICE: THESE PLANS, DESIGNS, AND IDEAS ARE THE EXCLUSIVE INTELLECTUAL PROPERTY OF MJS, INC. ALL RIGHTS RESERVED

mjs designers group
residential-commercial-architecture

AIBD

GOBA
GREATER ORLANDO BUILDERS ASSOCIATION

6-Unit: Rear Load Detached

Models: Tyler, Jackson, Grant, Jackson, Grant & Monroe

Building Pad #XX
Lot# XX-XX, Subdivision
Street Address
City, State. Zip Code

A division of Park Square Enterprises Inc.
5200 Vineland Rd. Suite #200
Orlando, Fl. 32811
Phone: (407) 529-3000

Park Square HOMES

ISSUE DATE	10/17/2022

REVISIONS

PROJECT:	22-1148
SCALE:	AS NOTED
DRAWN BY:	M.C.
DESIGNED BY:	MJS

ROOF LAYOUT

A7

Oct 17, 2022, 10:29am Carlos V:\Park Square Homes\MODELS\TOWNHOME MODELS\Townhomes (Orlando)\1- Townhome Models\Rear Load Detached Towns (Raised Heel)\6-Unit\A7 Elevations.dwg

FIND US ON FACEBOOK & HOUZZ AT MJS CUSTOM HOME DESIGNS

© COPYRIGHT 2016 PARK SQUARE HOMES HEREBY RESERVES ITS COMMON LAW COPYRIGHTS IN THESE PLANS, IDEAS AND DESIGN. THESE PLANS, IDEAS AND DESIGNS ARE NOT TO BE COPIED OR MODIFIED IN ANY MATTER OR FORM WHATSOEVER, NOR ARE THEY TO BE ASSIGNED TO ANY THIRD PARTY WITHOUT FIRST OBTAINING THE EXPRESS WRITTEN PERMISSION FROM PARK SQUARE HOMES.

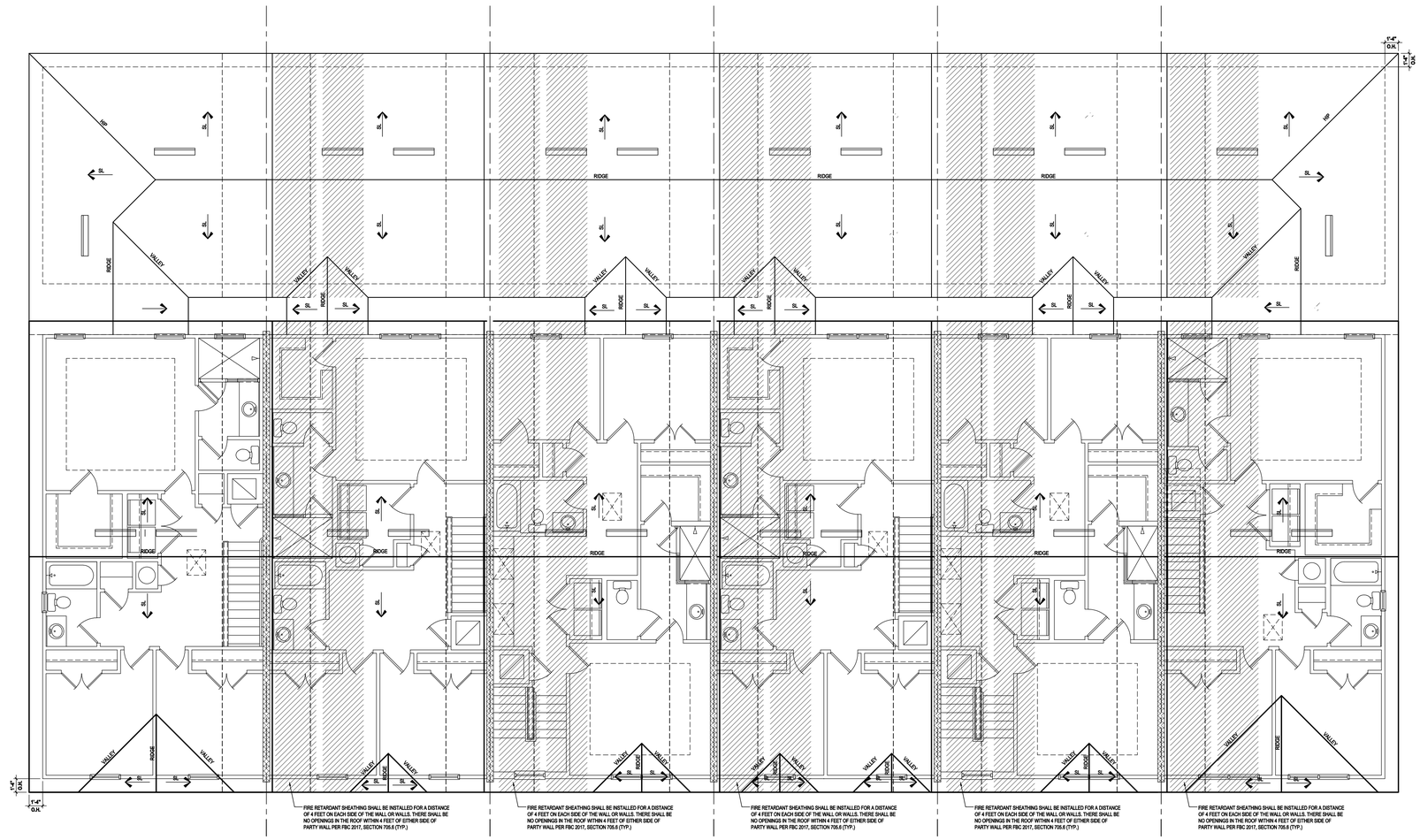

Elevation 2: Roof Lines

(Standard)

SCALE: 3/16" = 1'-0"

ATTIC VENT CALC'S.

RETENTION CALCULATIONS:
ROOF AREA: 9,516 SQ. FT.

AV VOLUME = (9,516/300) = 31.72 SQ. FT. / 2 = 15.86 SQ. FT.
15.86 x 144 = 2,283.84 SQ. IN.
1,697.04 SQ. IN / 98.75" = 23.12 VENTS NEEDED

AV REQUIRED: (24) VENTS NEEDED

2020 FLORIDA BUILDING CODE (7TH EDITION) SECTION R806
(OFF-RIDGE VENT MAXIMUM OPENING SIZES)

NOTE:
AS AN ALTERNATE TO TYP. ROOF INSUL. & VENTING A CLOSED ATTIC SYSTEM MAY BE SUBSTITUTED USING AN ICYNENE OR SIMM.

THOMPSON ENGINEERING GROUP, INC.
4401 Vineland Road Suite #5 Orlando, FL 32811
Ph: (407) 734-1450
Fax: (407) 734-1790
www.engfl.com

MJS designers group
residential-commercial-architecture

815 Orienta Ave., Suite #1040
Altamonte Springs, Fl. 32701
Ph: (407) 629-6711
Fax: (407) 629-6776
www.mjsdesignersgroup.com

COPYRIGHT NOTICE: THESE PLANS, DESIGNS, AND IDEAS ARE THE EXCLUSIVE INTELLECTUAL PROPERTY OF MJS. THEY ARE ALL RIGHTS RESERVED

AIBD

GOBA
GREATER ORLANDO BUILDERS ASSOCIATION

6-Unit: Rear Load Detached

Models: Tyler, Jackson, Grant, Jackson, Grant & Monroe

Building Pad #XX
Lot# XX-XX, Subdivision
Street Address
City, State. Zip Code

A division of Park Square Enterprises Inc.
5200 Vineland Rd. Suite #200
Orlando, Fl. 32811
Phone: (407) 529-3000

ISSUE DATE	10/17/2022
REVISIONS	
PROJECT:	22-1148
SCALE:	AS NOTED
DRAWN BY:	M.C.
DESIGNED BY:	MJS

Oct 17, 2022 10:29am Carlos V:\Park Square Homes\MODELS\TOWNHOME MODELS\Townhomes (Orlando)\1- Townhome Models\Rear Load Detached Towns (Raised Heel)\8-Unit\A7 Elevations.dwg

ROOF LAYOUT
A7.1

FIND US ON FACEBOOK & HOUZZ AT MJS CUSTOM HOME DESIGNS

NOTES:

1. STAIRWAY CONSTRUCTION TO CONFORM TO FBCR 2020, 7TH EDITION SECTION R311.7
2. MAX HT. OF RISER TO BE 7 3/4".
3. MIN. WIDTH OF TREAD TO BE 9" (EXCLUSIVE OF NOSING.
4. ALL TREADS LESS THAN 10" IN WIDTH SHALL HAVE APPROX. 1" OF NOSING.
5. 3/16" MAX VARIATION IN RISERS/TREADS ADJACENT TO EACH OTHER.
6. 3/8" MAX VARIATION IN ANY RISE/TREAD.
7. HAND RAIL CIRCULAR CROSS SECTION DIA. TO BE 1 1/4" - 2" OR TO PROVIDE EQUIVALENT GRASPABILITY.
8. UNDER MIN. 6" WIDE @NARROW END.
9. 34'-38" HANDRAIL HT.
10. HEADROOM CLEARANCE MIN 6'-8".

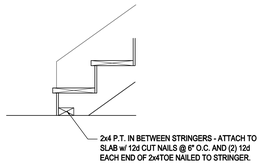

S1 / A8 TYP. STAIR CONNECT.

SCALE: 3/4" = 1'-0"

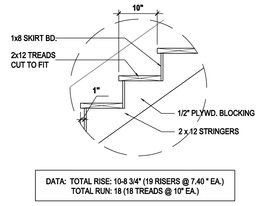

DATA: TOTAL RISE: 10-8 3/4" (19 RISERS @ 7.40 " EA.)
TOTAL RUN: 18 (18 TREADS @ 10" EA.)

S2 / A8 TREAD & RISER DETAIL

SCALE: 3/4" = 1'-0"

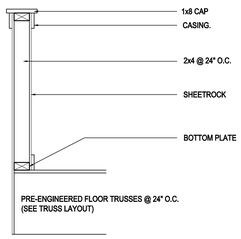

S3 / A8 HALF WALL DETAIL

SCALE: 3/4" = 1'-0"

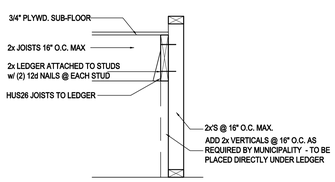

S4 / A8 LANDING CONNECT. DETAIL

SCALE: 3/4" = 1'-0" PLATFORM FRAMING

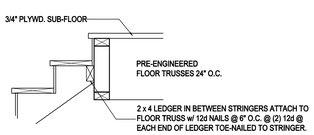

S5 / A8 STAIR CONNECT. @ FLR. TRUSS

SCALE: 3/4" = 1'-0" STRINGER TO FLOOR TRUSS

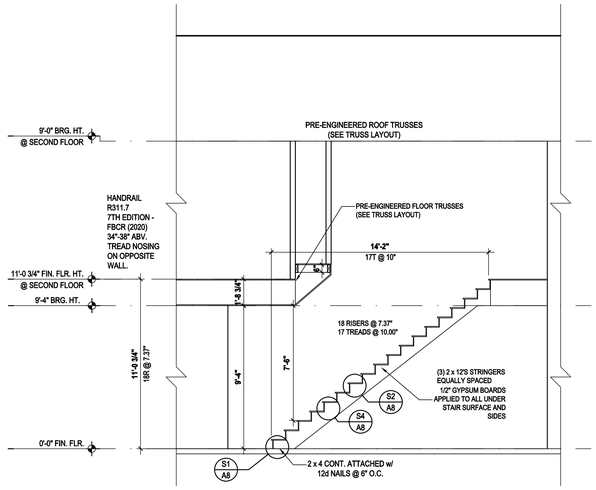

1 / A8 TYLER STAIR DETAIL

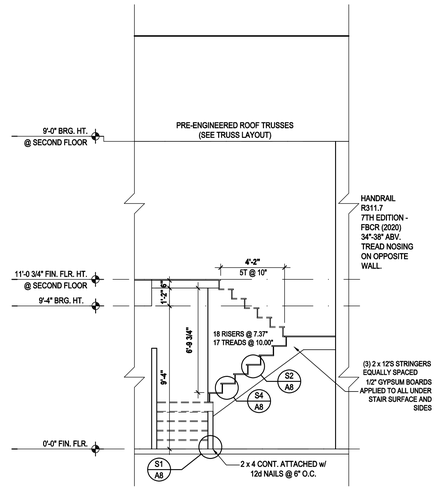

3 / A8 GRANT STAIR DETAIL

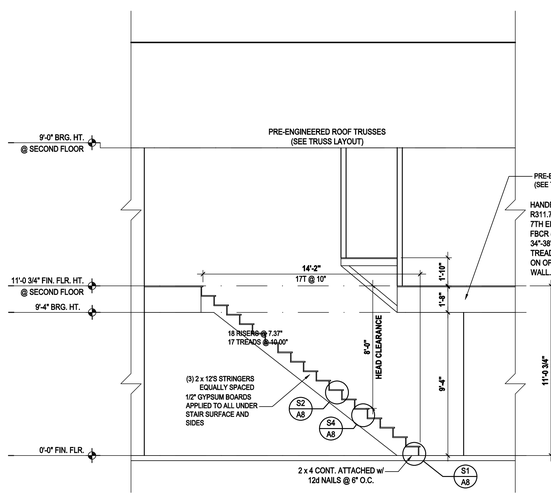

4 / A8 JACKSON STAIR DETAIL

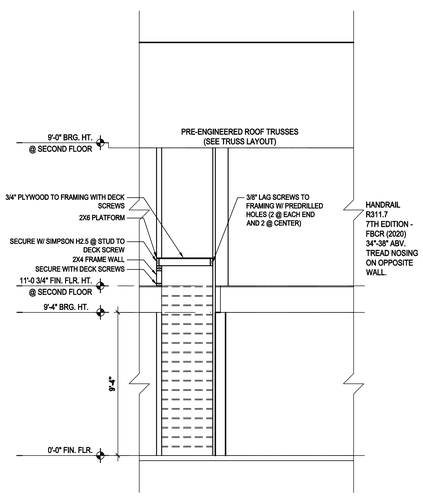

5 / A8 JACKSON RAISED PLATFORM DETAIL

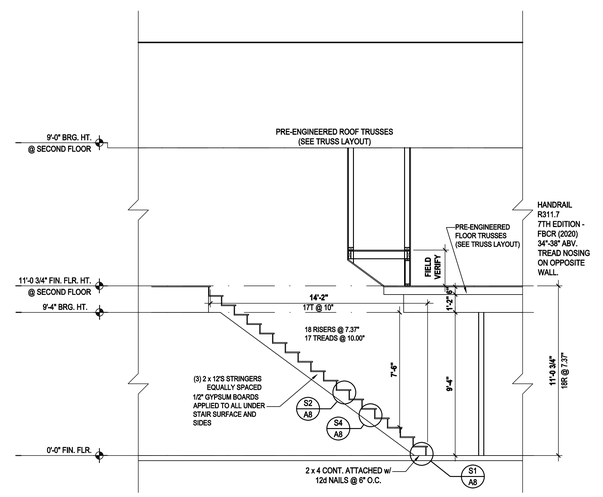

6 / A8 MONROE STAIR DETAIL

Stair Details

SCALE: 1/4" = 1'-0"

© COPYRIGHT 2016 PARK SQUARE HOMES HEREBY RESERVES ITS COMMON LAW COPYRIGHTS IN THESE PLANS, IDEAS AND DESIGN. THESE PLANS, IDEAS AND DESIGNS ARE NOT TO BE COPIED OR MODIFIED IN ANY MATTER OR FORM WHATSOEVER, NOR ARE THEY TO BE ASSIGNED TO ANY THIRD PARTY WITHOUT FIRST OBTAINING THE EXPRESS WRITTEN PERMISSION FROM PARK SQUARE HOMES.

houzz FIND US ON FACEBOOK & HOUZZ AT MJS CUSTOM HOME DESIGNS

THOMPSON ENGINEERING GROUP, INC.
4401 Vineland Road Suite #5 Orlando, FL 32811
Ph: (407) 734-1450
Fax: (407) 734-1790
www.engfl.com

815 Orienta Ave., Suite #1040
Altamonte Springs, Fl. 32701
Ph: (407) 629-6711
Fax: (407) 629-6776
www.mjsdesignersgroup.com

COPYRIGHT NOTICE: THESE PLANS, DESIGNS, AND IDEAS ARE THE EXCLUSIVE INTELLECTUAL PROPERTY OF MJS, INC. ALL RIGHTS RESERVED.

MJS designers group
residential-commercial-architecture

AIBD

GOBA GREATER ORLANDO BUILDERS ASSOCIATION

6-Unit: Rear Load Detached

Models: Tyler, Jackson, Grant, Jackson, Grant & Monroe

Building Pad #XX
Lot# XX-XX, Subdivision
Street Address
City, State. Zip Code

A division of Park Square Enterprises Inc.
5200 Vineland Rd. Suite # 200
Orlando, Fl. 32811
Phone: (407) 529-3000

Park Square HOMES

ISSUE DATE	10/17/2022
REVISIONS	
PROJECT:	22-1148
SCALE:	AS NOTED
DRAWN BY:	M.C.
DESIGNED BY:	MJS

SECTIONS
A8

Oct 17, 2022, 10:29am Carlos V:\Park Square Homes\MODELS\TOWNHOME MODELS\Townhomes (Orlando)\1- Townhome Models\Rear Load Detached Towns (Raised Heel)\6-Unit\A8 Sections.dwg

© COPYRIGHT 2016 PARK SQUARE HOMES HEREBY RESERVES ITS COMMON LAW COPYRIGHTS IN THESE PLANS, IDEAS AND DESIGN. THESE PLANS, IDEAS AND DESIGNS ARE NOT TO BE COPIED OR MODIFIED IN ANY MATTER OR FORM WHATSOEVER, NOR ARE THEY TO BE ASSIGNED TO ANY THIRD PARTY WITHOUT FIRST OBTAINING THE EXPRESS WRITTEN PERMISSION FROM PARK SQUARE HOMES.

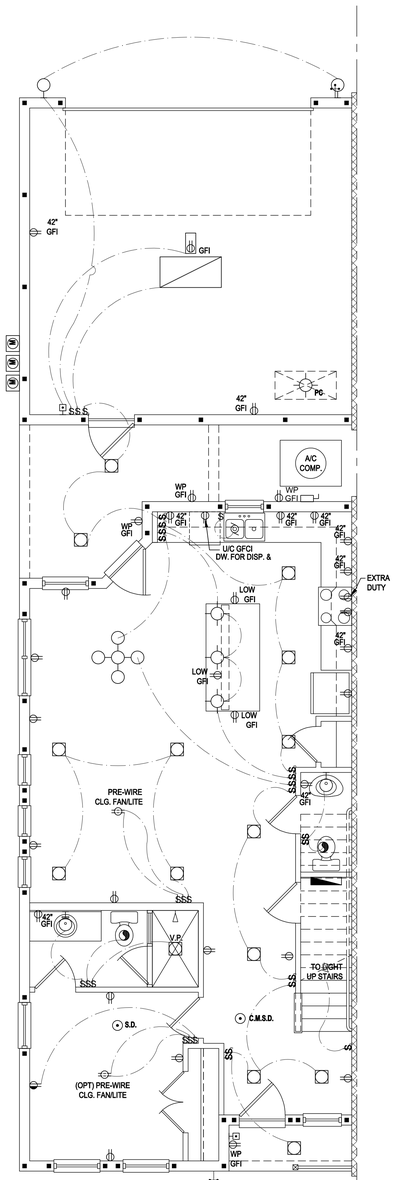

Tyler First Floor

SCALE: 1/4" = 1'-0"

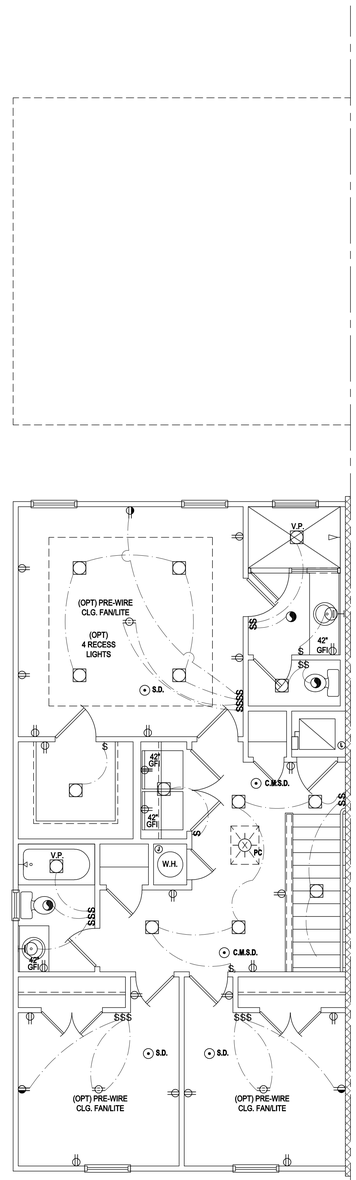

Tyler Second Floor

SCALE: 1/4" = 1'-0"

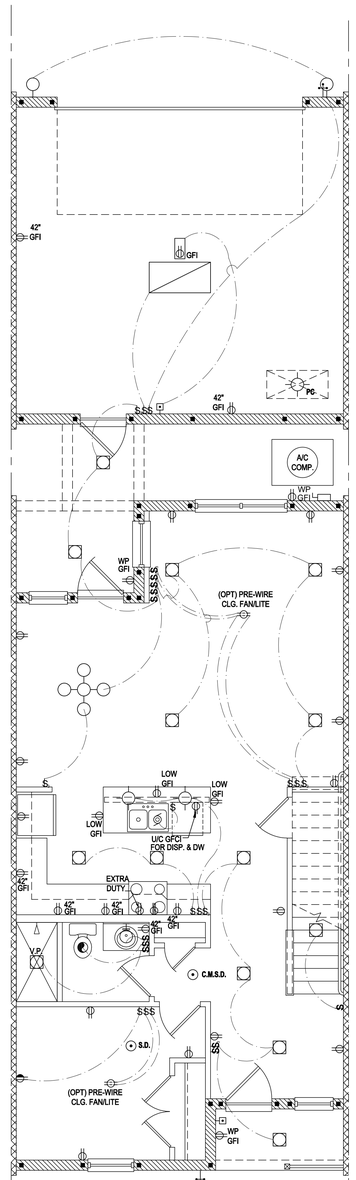

Jackson First Floor

SCALE: 1/4" = 1'-0"

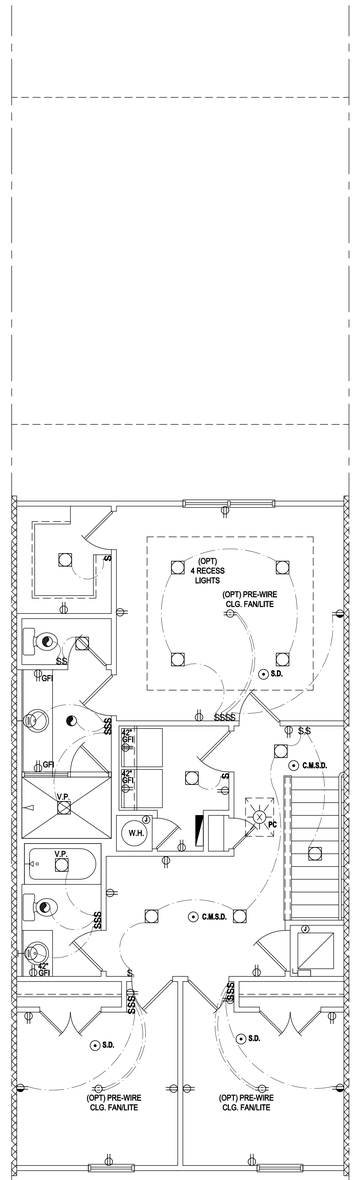

Jackson Second Floor

SCALE: 1/4" = 1'-0"

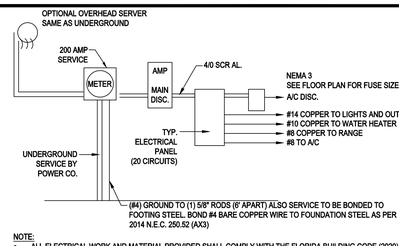

NOTE:
- ALL ELECTRICAL WORK AND MATERIAL PROVIDED SHALL COMPLY WITH THE FLORIDA BUILDING CODE (2020)
- THE ABOVE ELECTRICAL LAYOUT IS FOR BID PURPOSE ONLY.
- ELECTRICAL MATERIALS AND INSTALLATIONS SHALL COMPLY w/ APPLICABLE PROVISIONS OF THE NATIONAL ELECTRICAL CODE 250.52 (AX1) TO (6), LOCAL CODES AND THE LOCAL POWER COMPANY

200 AMP ELECTRICAL RISER

GENERAL NOTES KEY:

1. BUILDER TO VERIFY EXACT LOCATION OF FLOOR OUTLETS IN FIELD.
2. ALL OUTLETS ARE TO BE AFCI PROTECTED.
3. ALL 15A AND 20A 120V BRANCH CIRCUITS WILL BE AFCI PROTECTED.
4. ALL 15A AND 20A 120V BRANCH CIRCUITS LOCATED IN THE GARAGE AND LAUNDRY WILL BE GFCI PROTECTED.
5. ALL GARAGE BAYS WILL HAVE DEDICATED GFCI OUTLET.
6. ALL OUTLETS LOCATED IN THE KITCHEN AND BATHROOMS ARE TO BE GFCI PROTECTED.
7. DW. AND GARBAGE DISPOSAL ARE TO BE GFCI PROTECTED.
8. EXCEPTIONS TO THE GFCI STIPULATION WILL BE ALLOWED ONLY IF ALLOWED PER CURRENT NFPA / NEC.
9. OUTLETS LOCATED IN THE LAUNDRY ARE TO BE GFCI AND AFCI PROTECTED.
10. OUTLETS LOCATED WITHIN 6'-0" OF A WET AREA ARE TO BE GFCI PROTECTED.
11. ALL OUTLETS OVER COUNTERTOPS TO BE 42" A.F.F. (U.N.O.).
12. ALL SMOKE/CARBON MONOXIDE DETECTORS ARE TO BE HARD WIRED, INTERCONNECTED AND AFCI PROTECTED.
13. 8'-0" HEIGHT VANITY LIGHTS IN MASTER BATHROOM AND 7'-0" IN ALL OTHER BATHROOMS.

NOTES:
- THIS DIAGRAMMATIC PLAN IS INTENDED TO SHOW LIGHTING AND CONVENIENCE OUTLETS ONLY. IT IS THE ELECTRICAL CONTRACTORS RESPONSIBILITY TO VERIFY THE REQUIREMENT AND LOCATIONS OF ALL ELECTRICAL EQUIPMENT, (INCLUDING KITCHEN EQUIPMENT) AND PROVIDE AND INSTALL COMPLETE ELECTRICAL SERVICE AS REQUIRED PER NFPA, NEC, FBC CODES AND ALL REIGNING MUNICIPALITY CODES, STANDARDS AND ORDINANCES.
- LOCATION OF FIXTURES AND / OR OUTLETS ARE SUGGESTED LOCATIONS AND MEET MOST LOCAL CODE REQUIREMENTS. ADDITIONS OR ADJUSTMENTS MAY BE MADE BETWEEN THE OWNER AND BUILDER IN THE FIELD.
- ALL ELECTRICAL WORK AND APPLIANCES ARE IN FULL COMPLIANCE WITH N.F.P.A., N.E.C., F.B.C. 7TH EDITION (2020) RESIDENTIAL, AND ALL APPLICABLE LOCAL STANDARDS, CODES, AND ORDINANCES.
- VARIOUS SYMBOLS ON ELECTRICAL LEGEND MAY OR MAY NOT BE USED ON THIS PLAN.

SMOKE DETECTOR REQUIREMENTS:
ALL SMOKE/CARBON DETECTOR LOCATIONS MUST BE A MINIMUM OF 3' FROM ANY BATHROOM PER FBC-R314.3 (4). THEY MUST ALSO BE LOCATED NO MORE THAN 10' FROM ANY BEDROOM DOOR OPENING PER FBC-R315.1.

ELECTRICAL KEY:

	CEILING MOUNTED LIGHT
PC	PULL CHAIN LIGHT
	RECESSED LIGHT
	WALL MOUNTED LIGHT
	WALL WASH RECESSED
	DUPLEX RECEPTACLE
	220 V RECEPTACLE
	1/2 HOT, 1/2 SWITCHED
WP	WATER PROOF RECEPTACLE
	FLOOR RECEPTACLE
	PRE-WIRE FOR CLG. FAN
GFI	GROUND FAULT INTERRUPT
S	WALL SWITCH
S3	3-WAY SWITCH
SD	DIMMER SWITCH
	TELEPHONE JACK
	CABLE JACK
	PRE-WIRE GARAGE DOOR OPENER
	FLUORESCENT LIGHT
	ELECTRICAL PANEL
CH	CHIME
DB	DOOR BELL / GARAGE DOOR SWITCH
	DISCONNECT SWITCH
M	ELECTRICAL METER
S.D.	SMOKE DETECTOR
C.M.S.D.	CARBON MONOXIDE / SMOKE DETECTOR
	CEILING FAN
	WALL SCONCE
	CHANDELIER
	SPOT LIGHT
	FLUSH MOUNT FLUORESCENT LIGHT
	FAN / LIGHT COMBINATION
	GARBAGE DISPOSAL MOTOR
SP	SPEAKER
J	JUNCTION BOX
L.V.	LOW VOLTAGE
V.P.	VAPOR PROOF
A.F.	ARC FAULT PROTECTION
IC	INTERCOM

Electrical Plan

SCALE: 1/4" = 1'-0"

THOMPSON ENGINEERING GROUP, INC.
4401 Vineland Road Suite #5 Orlando, FL 32811
Ph: (407) 734-1450
Fax: (407) 734-1790
www.tegfl.com

815 Orienta Ave., Suite #1040
Altamonte Springs, Fl. 32701
Ph: (407) 629-6711
Fax: (407) 629-6776
www.mjsdesignersgroup.com

COPYRIGHT NOTICE: THESE PLANS, DESIGNS, AND IDEAS ARE THE EXCLUSIVE INTELLECTUAL PROPERTY OF MJS. THEY ARE ALL RIGHTS RESERVED!

mjs designers group
residential-commercial-architecture

AIBD

GOBA
GREATER ORLANDO BUILDERS ASSOCIATION

6-Unit: Rear Load Detached

Models: Tyler, Jackson, Grant, Jackson, Grant & Monroe

Building Pad #XX
Lot# XX-XX, Subdivision
Street Address
City, State: Zip Code

A division of Park Square Enterprises Inc.
5200 Vineland Rd. Suite #200
Orlando, Fl. 32811
Phone: (407) 529-3000

Park Square HOMES

ISSUE DATE	10/17/2022
REVISIONS	
PROJECT:	22-1148
SCALE:	AS NOTED
DRAWN BY:	M.C.
DESIGNED BY:	MJS

ELECTRICAL LAYOUT
E1

Oct 17, 2022 10:29am Carlos V:\Park Square Homes\MODELS\TOWNHOME MODELS\Townhomes (Orlando)\1-Townhome Models\Rear Load Detached Towns (Raised Heel)\6-Unit\E1 Electrical Layout (Tyler)Jackson).dwg

houzz FIND US ON FACEBOOK & HOUZZ AT MJS CUSTOM HOME DESIGNS

© COPYRIGHT 2016 PARK SQUARE HOMES HEREBY RESERVES ITS COMMON LAW COPYRIGHTS IN THESE PLANS, IDEAS AND DESIGN. THESE PLANS, IDEAS AND DESIGNS ARE NOT TO BE COPIED OR MODIFIED IN ANY MATTER OR FORM WHATSOEVER, NOR ARE THEY TO BE ASSIGNED TO ANY THIRD PARTY WITHOUT FIRST OBTAINING THE EXPRESS WRITTEN PERMISSION FROM PARK SQUARE HOMES.

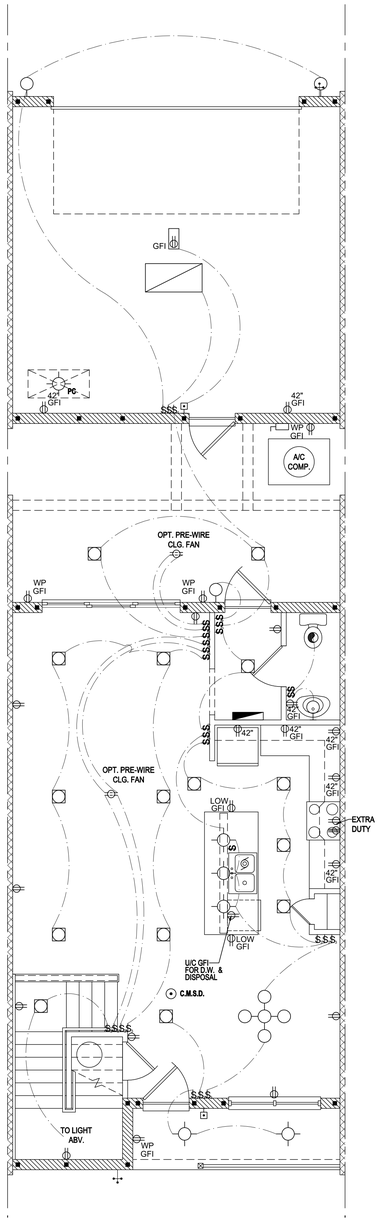

Grant First Floor

SCALE: 1/4" = 1'-0"

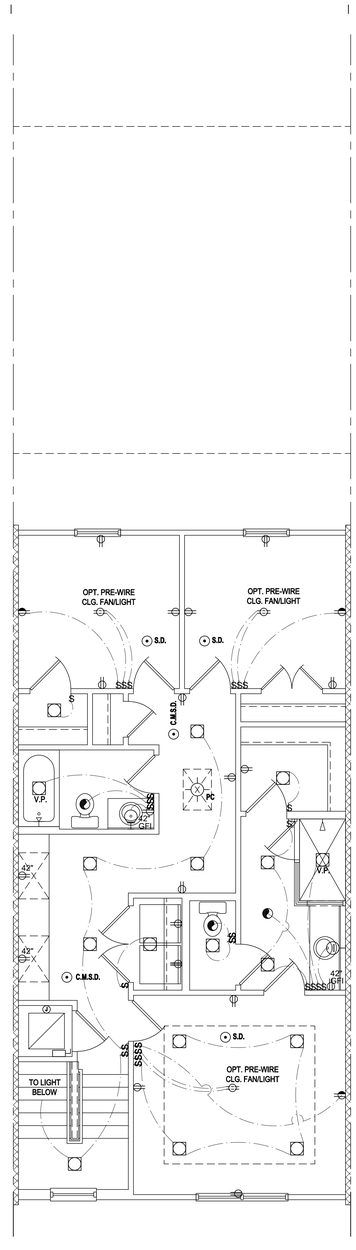

Grant Second Floor

SCALE: 1/4" = 1'-0"

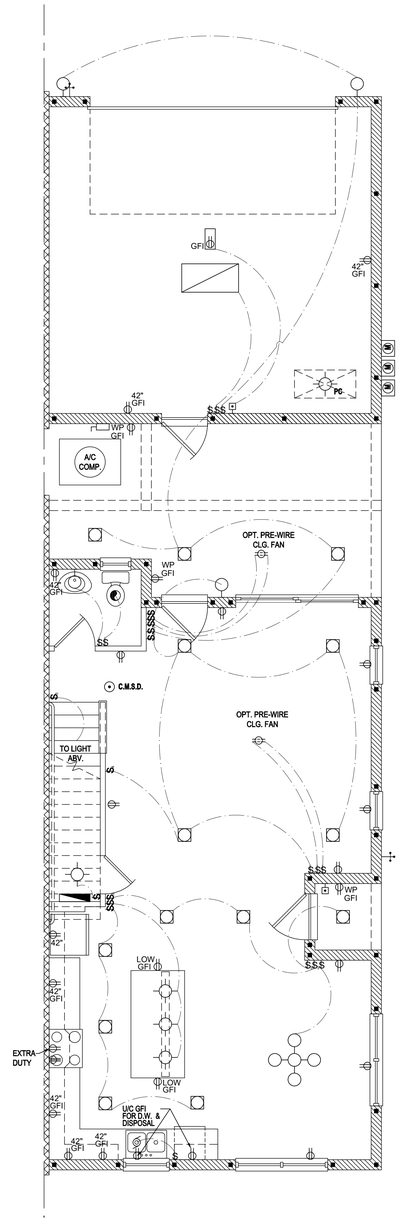

Monroe First Floor

SCALE: 1/4" = 1'-0"

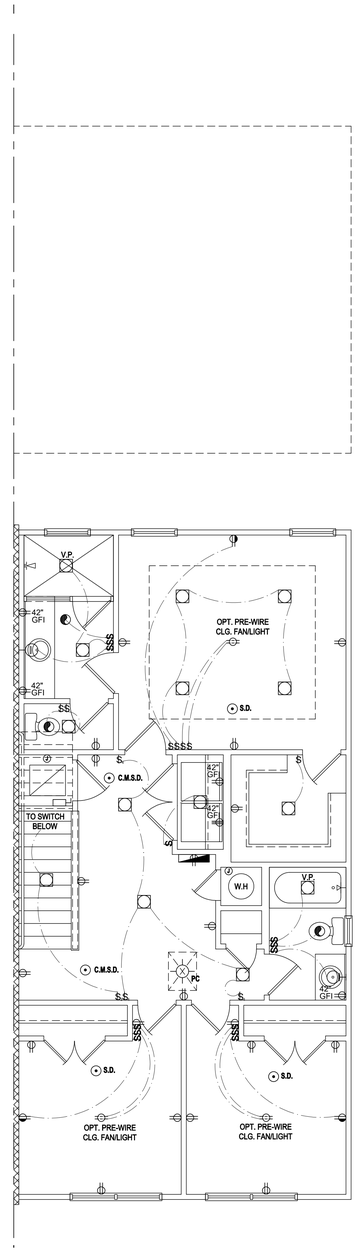

Monroe Second Floor

SCALE: 1/4" = 1'-0"

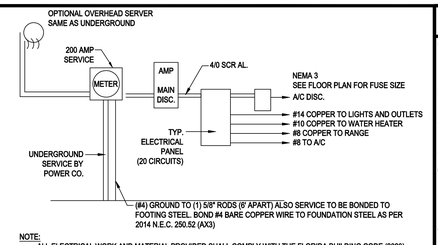

NOTE:
- ALL ELECTRICAL WORK AND MATERIAL PROVIDED SHALL COMPLY WITH THE FLORIDA BUILDING CODE (2020)
- THE ABOVE ELECTRICAL LAYOUT IS FOR BID PURPOSE ONLY.
- ELECTRICAL MATERIALS AND INSTALLATIONS SHALL COMPLY w/ APPLICABLE PROVISIONS OF THE NATIONAL ELECTRICAL CODE 250.52 (AX1) TO (6). LOCAL CODES AND THE LOCAL POWER COMPANY

200 AMP ELECTRICAL RISER

GENERAL NOTES KEY:

1. BUILDER TO VERIFY EXACT LOCATION OF FLOOR OUTLETS IN FIELD.
2. ALL OUTLETS ARE TO BE AFCI PROTECTED.
3. ALL 15A AND 20A 120V BRANCH CIRCUITS WILL BE AFCI PROTECTED.
4. ALL 15A AND 20A 120V BRANCH CIRCUITS LOCATED IN THE GARAGE AND LAUNDRY WILL BE GFCI PROTECTED.
5. ALL GARAGE BAYS WILL HAVE DEDICATED GFCI OUTLET.
6. ALL OUTLETS LOCATED IN THE KITCHEN AND BATHROOMS ARE TO BE GFCI PROTECTED.
7. DW. AND GARBAGE DISPOSAL ARE TO BE GFCI PROTECTED.
8. EXCEPTIONS TO THE GFCI STIPULATION WILL BE ALLOWED ONLY IF ALLOWED PER CURRENT NFPA / NEC.
9. OUTLETS LOCATED IN THE LAUNDRY ARE TO BE GFCI AND AFCI PROTECTED.
10. OUTLETS LOCATED WITHIN 6'-0" OF A WET AREA ARE TO BE GFCI PROTECTED.
11. ALL OUTLETS OVER COUNTERTOPS TO BE 42" A.F.F. (U.N.O.).
12. ALL SMOKE/CARBON MONOXIDE DETECTORS ARE TO BE HARD WIRED, INTERCONNECTED AND AFCI PROTECTED.
13. 8'-0" HEIGHT VANITY LIGHTS IN MASTER BATHROOM AND 7'-0" IN ALL OTHER BATHROOMS.

NOTES:
- THIS DIAGRAMMATIC PLAN IS INTENDED TO SHOW LIGHTING AND CONVENIENCE OUTLETS ONLY. IT IS THE ELECTRICAL CONTRACTORS RESPONSIBILITY TO VERIFY THE REQUIREMENT AND LOCATIONS OF ALL ELECTRICAL EQUIPMENT, (INCLUDING KITCHEN EQUIPMENT) AND PROVIDE AND INSTALL COMPLETE ELECTRICAL SERVICE AS REQUIRED PER NFPA, NEC, FBC CODES AND ALL REIGNING MUNICIPALITY CODES, STANDARDS AND ORDINANCES.
- LOCATION OF FIXTURES AND / OR OUTLETS ARE SUGGESTED LOCATIONS AND MEET MOST LOCAL CODE REQUIREMENTS. ADDITIONS OR ADJUSTMENTS MAY BE MADE BETWEEN THE OWNER AND BUILDER IN THE FIELD.
- ALL ELECTRICAL WORK AND APPLIANCES ARE IN FULL COMPLIANCE WITH N.F.P.A., N.E.C., F.B.C. 7TH EDITION (2020) RESIDENTIAL, AND ALL APPLICABLE LOCAL STANDARDS, CODES, AND ORDINANCES.
- VARIOUS SYMBOLS ON ELECTRICAL LEGEND MAY OR MAY NOT BE USED ON THIS PLAN.

SMOKE DETECTOR REQUIREMENTS:
ALL SMOKE/CARBON DETECTOR LOCATIONS MUST BE A MINIMUM OF 3' FROM ANY BATHROOM PER FBC-R314.3 (4). THEY MUST ALSO BE LOCATED NO MORE THAN 10' FROM ANY BEDROOM DOOR OPENINGS PER FBC-R315.1.

ELECTRICAL KEY:

	CEILING MOUNTED LIGHT
PC	PULL CHAIN LIGHT
	RECESSED LIGHT
	WALL MOUNTED LIGHT
	WALL WASH RECESSED
	DUPLEX RECEPTACLE
	220 V RECEPTACLE
	1/2 HOT, 1/2 SWITCHED
WP	WATER PROOF RECEPTACLE
	FLOOR RECEPTACLE
	PRE-WIRE FOR CLG. FAN
GFI	GROUND FAULT INTERRUPT
$	WALL SWITCH
$3	3-WAY SWITCH
$D	DIMMER SWITCH
	TELEPHONE JACK
	CABLE JACK
	PRE-WIRE GARAGE DOOR OPENER
	FLUORESCENT LIGHT
	ELECTRICAL PANEL
CH	CHIME
	DOOR BELL / GARAGE DOOR SWITCH
	DISCONNECT SWITCH
M	ELECTRICAL METER
S.D.	SMOKE DETECTOR
C.M.S.D.	CARBON MONOXIDE / SMOKE DETECTOR
	CEILING FAN
	WALL SCONCE
	CHANDELIER
	SPOT LIGHT
	FLUSH MOUNT FLUORESCENT LIGHT
	FAN / LIGHT COMBINATION
	GARBAGE DISPOSAL MOTOR
S	SPEAKER
J	JUNCTION BOX
L.V.	LOW VOLTAGE
V.P.	VAPOR PROOF
A.F.	ARC FAULT PROTECTION
IC	INTERCOM

Electrical Plan

SCALE: 1/4" = 1'-0"

TEG
THOMPSON ENGINEERING GROUP, INC.
4601 Vineland Road Suite #5 Orlando, FL 32811
Ph: (407) 734-1450
Fax: (407) 734-1790
www.segfl.com

MJS designers group
residential-commercial-architecture
815 Orienta Ave., Suite #1040
Altamonte Springs, Fl. 32701
Ph: (407) 629-6711
Fax: (407) 629-6776
www.mjsdesignersgroup.com

COPYRIGHT NOTICE: THESE PLANS, DESIGNS, AND IDEAS ARE THE EXCLUSIVE INTELLECTUAL PROPERTY OF MJS. THEY ARE ALL RIGHTS RESERVED.

AIBD

GOBA
GREATER ORLANDO BUILDERS ASSOCIATION

6-Unit: Rear Load Detached

Models: Tyler, Jackson, Grant, Jackson, Grant & Monroe

Building Pad #XX
Lot# XX-XX, Subdivision
Street Address
City, State. Zip Code

A division of Park Square Enterprises Inc.
5200 Vineland Rd. Suite #200
Orlando, Fl. 32811
Phone: (407) 529-3000

Park Square HOMES

ISSUE DATE	10/17/2022
REVISIONS	
PROJECT:	22-1148
SCALE:	AS NOTED
DRAWN BY:	M.C.
DESIGNED BY:	MJS

ELECTRICAL LAYOUT
E2

Oct 17, 2022, 10:29am Carlos V:\Park Square Homes\MODELS\TOWNHOME MODELS\Townhomes (Orlando)\1- Townhome Models\Rear Load Detached Towns (Raised Heel)\6-Unit\E2 Electrical Layout (Grant)(Monroe).dwg

FIND US ON FACEBOOK & HOUZZ AT MJS CUSTOM HOME DESIGNS

© COPYRIGHT 2016 PARK SQUARE HOMES HEREBY RESERVES ITS COMMON LAW COPYRIGHTS IN THESE PLANS, IDEAS AND DESIGN. THESE PLANS, IDEAS AND DESIGNS ARE NOT TO BE COPIED OR MODIFIED IN ANY MATTER OR FORM WHATSOEVER, NOR ARE THEY TO BE ASSIGNED TO ANY THIRD PARTY WITHOUT FIRST OBTAINING THE EXPRESS WRITTEN PERMISSION FROM PARK SQUARE HOMES.

ANCHOR SPACING TABLE	
LENGTH/SIDE	No. OF ANCHORS/SIDES
LESS THAN 12"	ONE / SIDE
12" - 24"	TWO / SIDE
36" UP # 5 TONS # UP	FOUR / SIDE

1 COND. ANCHOR DETAIL
N.T.S.

FIELD REPAIR NOTES

1- MISSED FOOTING DOWELS MAY BE SUBSTITUTED W/ A STRAIGHT #5 REBAR SET IN A 3/4" DIA. x 6" DEEP HOLE FILLED W/ UNITEX PROPOXY 300 OR SIMPSON SET OR ETF ADHESIVES.

2- BLOCK WALL OVERHANGING SLAB CONDITION: UP TO 7/8" - NO REPAIR NECESSARY 7/8" TO 1¼" - ADD FILLED CELL (NO VERTICAL STEEL) MIDPOINT OF WALL BETWEEN EXISTING FILLED CELLS (WITH STEEL) IN AREAS AFFECTED. 1¼"+ - REQUIRE SPECIAL ENGINEERING LETTER.

3- PENETRATION OF PLUMBING PIPES/DRYER VENTS THRU PLATES OF A LOAD BEARING WALL MAY OCCUR PROVIDED DBL. STUDS ARE ADDED ON EITHER SIDE OF PENETRATION WITHIN 3" AND TRUSS/FLOOR TRUSS IS NO CLOSER THAN 3" FROM PENETRATION. ADD (1) MTS12 @ TOP AND BOTTOM PLATE.

VERIFICATION OF FIELD CONDITIONS:

CONTRACTOR SHALL VERIFY ALL FIELD CONDITIONS AND DIMENSIONS RELATIVE TO SAME. WHERE THERE ARE CONFLICTS BETWEEN ACTUAL FIELD CONDITIONS AND DATA PRESENTED IN THE DRAWINGS, SUCH CONDITIONS SHALL BE CALLED TO THE ARCHITECTS AND OR TO THE ENGINEER OF RECORD'S (EOR) ATTENTION AND NECESSARY ADJUSTMENTS MADE PER THEIR INSTRUCTIONS.

FOUNDATION NOTES

1. CONTRACTOR VERIFY ALL DIMENSIONS ON JOB SITE.
2. ■ DENOTES FILL CELL REINF. W/ CONC. W/ (1) #5 REBAR, GRADE 60.
   ▣ DENOTES FILL CELL REINF. W/ CONC. W/ (2) #5 REBAR, GRADE 60.
3. DENOTES FLOOR SLAB OF PLANT MIX CONCRETE 2500 P.S.I. AT THICK WITH 6X6 - 10/10 GAUGE REINFORCING MAT. W/ MIN. 1" COVER TERMITE TREATED SOIL WITH 0.006mm (6mil) POLYETHYLENE VAPOR BARRIER OVER COMPACTED CLEAN FILL. WWF SHALL BE PLACE IN MIDDLE TO UPPER THIRD OF SLAB AND SUPPORTED ON APPROVED SLAB BOLSTERS. *FIBER MESH REINFORCEMENT MAY USED AS ALTERNATIVE TO WWF.
4. DO NOT SCALE PRINTS! CONSTRUCTION TO BE FROM CALCULATED DIMENSIONS ONLY. ANY DISCREPANCIES OR ERRORS TO BE REPORTED PROMPTLY TO SUPER-VISOR FOR CLARIFICATION.
5. WATER HEATER T&P RELIEF VALVE SHALL E FULL SIZE TO EXTERIOR. WATER HEATER AT OR ABOVE FLOOR LEVEL E.I.-FALL E IN A PAN WITH DRAIN TO EXTERIOR. WATER HEATER SHALL HAVE APPROVED THERMAL EXPANSION DEVICE
6. PAVERS MAY BE USED ILO CONCRETE SLABS IN PATIO, PORCH, DRIVE AND WALKWAY AREAS. DELETE SLAB IN AREAS PAVERS ARE USED.
7. MECHANICAL EQUIP. LOCATIONS WILL BE DETERMINED BY COMMUNITY AND COUNTY CODES.
8. IN LIEU OF TREATING THE SOIL, AN ALTERNATIVE TO TERMITE TREATED SOIL CA BE PREMISE 75 WP TERMICIDE.
9. BORA -CARE TO BE APPLIED ON INTERIOR WALLS W/ MANUFACTURERS INSTRUCTIONS AND SPECIFICATIONS, PURSUANT FLORIDA BUILDING CODE LATEST EDITION.

FIND US ON FACEBOOK & HOUZZ AT MJS CUSTOM HOME DESIGNS

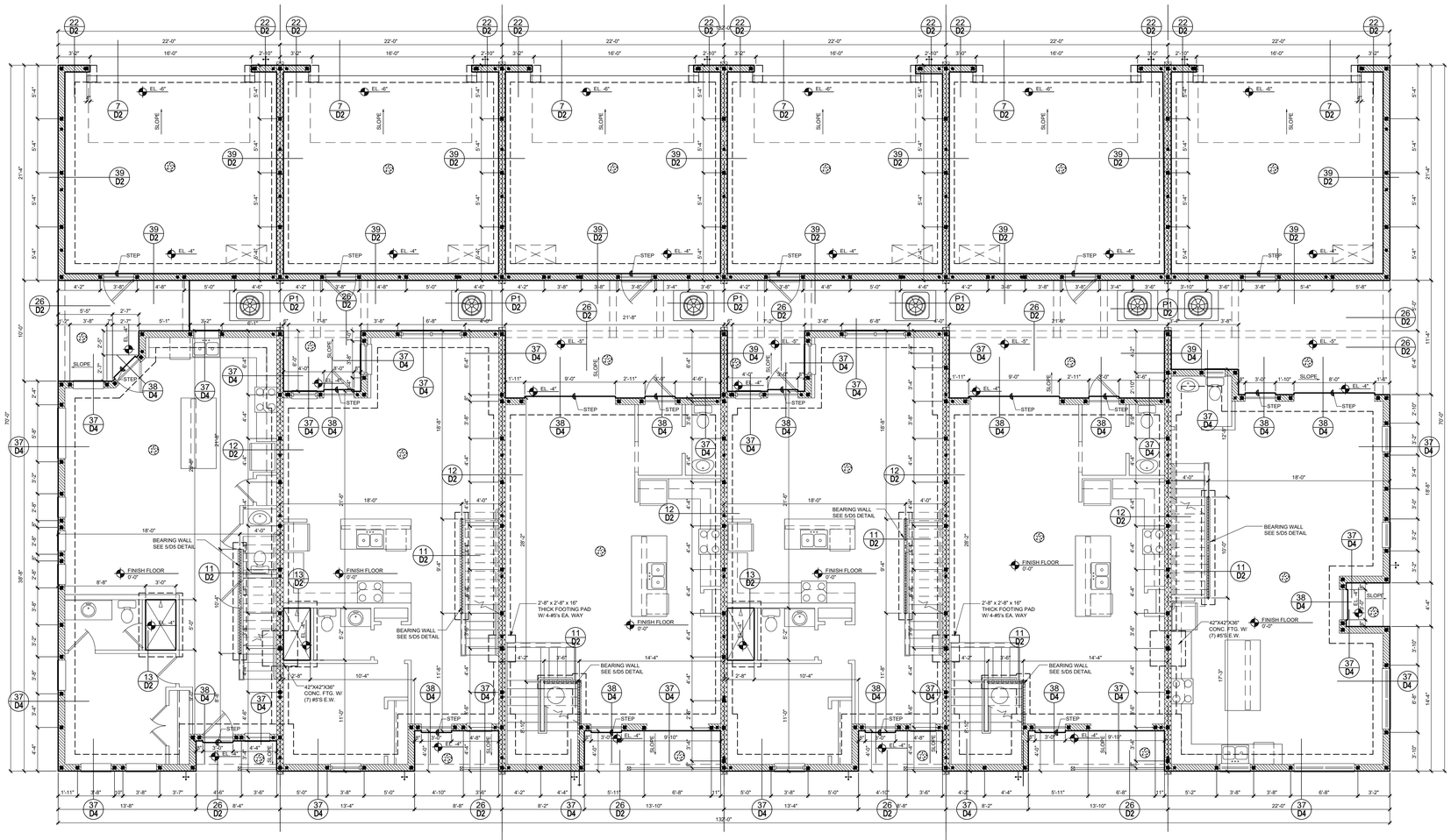

FOUNDATION PLAN A
ELEVATION "F, H"
3/16"=1'-0" (30x42)

THOMPSON ENGINEERING GROUP, INC.
4401 Vineland Road Suite #5 Orlando, FL 32811
Ph: (407) 734-1450
Fax: (407) 734-1790
www.engfl.com

MJS designers group
residential-commercial-architecture
815 Oriental Ave., Suite #1040
Altamonte Springs, Fl. 32701
Ph: (407) 629-6711
Fax: (407) 629-6776
www.mjsdesignersgroup.com

COPYRIGHT NOTICE: THESE PLANS, DESIGNS, AND IDEAS ARE THE EXCLUSIVE INTELLECTUAL PROPERTY OF MJS, INC. ALL RIGHTS RESERVED

AIBD

GOBA
GREATER ORLANDO BUILDERS ASSOCIATION

6-Unit: Rear Load Detached

Models: Tyler, Jackson, Grant, Jackson, Grant & Monroe

Building Pad #XX
Lot# XX-XX, Subdivision
Street Address
City, State. Zip Code

A division of Park Square Enterprises Inc.
5200 Vineland Rd. Suite #200
Orlando, Fl. 32811
Phone: (407) 529-3000

Park Square HOMES

ISSUE DATE	10/17/2022
REVISIONS	
PROJECT:	22-1148
SCALE:	AS NOTED
DRAWN BY:	M.C.
DESIGNED BY:	MJS

FOUNDATION PLAN
ELEV. A 4 UNIT

S001

Oct 17, 2022,10:29am Carlos V:\Park Square Homes\MODELS\TOWNHOME MODELS\Townhomes (Orlando)\1- Townhome Models\Rear Load Detached Towns (Raised Heel)\6-Unit\S001 Foundation Plan 6 UNIT.dwg

© COPYRIGHT 2016 PARK SQUARE HOMES HEREBY RESERVES ITS COMMON LAW COPYRIGHTS IN THESE PLANS, IDEAS AND DESIGN. THESE PLANS, IDEAS AND DESIGNS ARE NOT TO BE COPIED OR MODIFIED IN ANY MATTER OR FORM WHATSOEVER, NOR ARE THEY TO BE ASSIGNED TO ANY THIRD PARTY WITHOUT FIRST OBTAINING THE EXPRESS WRITTEN PERMISSION FROM PARK SQUARE HOMES.

CAST CRETE / LOTTS / WEKIWA / FLORIDA ROCK PRECAST LINTEL SCHEDULE

LINTEL NO.	LENGTH	TYPE	COMMENTS
L-1	17'-4"	8F32-1B/1T	GARAGE DOOR
L-2	4'-6"	8R14-1B/1T	GARAGE/FRONT DOOR
L-3	4'-6"	8F28-1B/1T	3050 S.H.
L-4	4'-0"	8F28-1B/1T	2'X6" X 2'X6" FIX. GLS.
L-5	7'-6"	8F28-1B/1T	(2) 3050 S.H.
L-6	10'-6"	8F16-1B/1T	9'-0" X 8'-0" S.G.D.
L-7	3'-6"	8F28-1B/1T	2' X 2' FIX. GLS.
L-8	9'-4"	8F16-1B/1T	8'-0" X 8'-0" S.G.D.
L-9	4'-0"	8F16-1B/1T	2630 S.H.
L-10	7'-6"	8F16-1B/1T	(2) 3050 S.H.
L-11	4'-6"	8F16-1B/1T	3050/3040/3030 S.H.
L-12	3'-6"	8F16-1B/1T	2030 S.H.
L-13	6'-6"	8F16-1B/1T	5050 S.H.
L-14	5'-10"	8F8-1B/1T	ENTRY
L-15	11'-4"	8F8-1B/1T	ENTRY
L-16	6'-6"	8F8-1B/1T	ENTRY
L-17	24'-0"	8F8-1B/1T	ENTRY
L-18	9'-4"	8F8-1B/1T	ENTRY
L-19	13'-4"	8F8-1B/1T	ENTRY
L-20	10'-6"	8F8-1B/1T	ENTRY

SAFE LOAD TABLES
FOR GRAVITY, UPLIFT & LATERAL LOADS

8" PRECAST & PRESTRESSED U-LINTELS — GRAVITY

LENGTH / TYPE	8U8	8F8-0B / 8F8-1B	8F12-0B / 8F12-1B	8F16-0B / 8F16-1B	8F20-0B / 8F20-1B	8F24-0B / 8F24-1B	8F28-0B / 8F28-1B	8F32-0B / 8F32-1B
2'-10" (34") PRECAST	2302	3166	4473	6039	7526	9004	10472	11936
		3166	4473	6039	7526	9004	10472	11936
3'-6" (42") PRECAST	2302	3138	3377	4689	6001	7315	8630	9947
		3166	4473	6039	7526	9004	10472	11936
4'-0" (48") PRECAST	2029	2325	2496	3467	4438	5410	6384	7358
		2646	4473	6039	7526	9004	10472	11936
4'-6" (54") PRECAST	1651	1787	1913	2657	3403	4149	4896	5644
		2170	4027	6039	7526	9004	10472	9668
5'-4" (64") PRECAST	1184	1223	1301	1809	2317	2826	3336	3846
		1665	2889	5057	6096	5400	6424	7450
5'-10" (70") PRECAST	972	1000	1059	1474	1889	2304	2721	3137
		1459	2464	4144	5458	4437	5280	6122
6'-6" (78") PRECAST	937	1255	2101	3263	2746	3358	3971	4585
		1255	2101	3396	5260	7134	8995	6890
7'-6" (90") PRECAST	767	1029	1675	2385	1994	2439	2886	3333
		1029	1675	2610	3839	5596	6613	5047
9'-4" (112") PRECAST	573	632	1049	1469	1210	1482	1754	2027
		768	1212	1818	2544	3469	4030	3127
10'-6" (126") PRECAST	456	482	802	1125	915	1122	1328	1535
		658	1025	1514	2081	2774	3130	2404
11'-4" (136") PRECAST	445	598	935	1365	1854	2355	1793	2075
		598	935	1365	1854	2441	3155	4044
12'-0" (144") PRECAST	414	545	864	1254	1689	2074	1570	1818
		555	864	1254	1693	2211	2832	3590
13'-4" (160") PRECAST	362	427	726	1028	1331	1635	1224	1418
		485	748	1076	1438	1855	2343	2920
14'-0" (168") PRECAST	338	381	648	919	1190	1462	1087	1260
		455	700	1003	1335	1714	2153	2666
14'-8" (176") PRESTRESSED	N.R.	NR	NR	NR	NR	NR	NR	NR
		465	765	1370	2045	2610	3185	3765
15'-4" (184") PRESTRESSED	N.R.	NR	NR	NR	NR	NR	NR	NR
		420	695	1250	1855	2370	2890	3410
17'-4" (208") PRESTRESSED	N.R.	NR	NR	NR	NR	NR	NR	NR
		310	530	950	1400	1800	2200	2600
19'-4" (232") PRESTRESSED	N.R.	NR	NR	NR	NR	NR	NR	NR
		240	400	750	1090	1400	1720	2030
21'-4" (256") PRESTRESSED	N.R.	NR	NR	NR	NR	NR	NR	NR
		183	330	610	940	1340	1780	2110
22'-0" (264") PRESTRESSED	N.R.	NR	NR	NR	NR	NR	NR	NR
		160	300	570	870	1250	1660	1970
24'-0" (288") PRESTRESSED	N.R.	NR	NR	NR	NR	NR	NR	NR
		130	240	470	720	1030	1350	1610

8" PRECAST W/ 2" RECESS DOOR U-LINTELS — GRAVITY

LENGTH / TYPE	8RU6	8RF6-0B / 8RF6-1B	8RF10-0B / 8RF10-1B	8RF14-0B / 8RF14-1B	8RF18-0B / 8RF18-1B	8RF22-0B / 8RF22-1B	8RF26-0B / 8RF26-1B	8RF30-0B / 8RF30-1B
4'-4" (52") PRECAST	1489	1591	3053	2982	3954	4929	5904	6880
		1827	3412	4982	6472	7947	9416	10878
4'-6" (54") PRECAST	1357	1449	2782	2714	3600	4487	5375	6264
		1702	3412	4982	6472	7947	9416	10878
5'-8" (68") PRECAST	785	832	1602	1550	2058	2566	3075	3585
		1153	2162	4074	6472	6516	5814	6839
5'-10" (70") PRECAST	735	779	1500	1449	1924	2400	2876	3352
		1103	2051	3811	6472	6516	5450	6411
6'-8" (80") PRECAST	822	907	1677	2933	2576	3223	3872	4522
		907	1677	2933	4100	6730	8177	6707
7'-6" (90") PRECAST	665	761	1377	2252	1958	2451	2944	3439
		764	1377	2329	3609	5492	6624	5132
9'-8" (116") PRECAST	371	420	834	1253	1071	1342	1614	1886
		535	928	1497	2179	2618	3595	2875

8" PRECAST & PRESTRESSED U-LINTELS — UPLIFT / LATERAL

LENGTH / TYPE	8F8-1T / 8F8-2T	8F12-1T / 8F12-2T	8F16-1T / 8F16-2T	8F20-1T / 8F20-2T	8F24-1T / 8F24-2T	8F28-1T / 8F28-2T	8F32-1T / 8F32-2T	LATERAL 8U8	LATERAL 8F8
2'-10" (34") PRECAST	2727	2878	4101	5332	6569	7811	9055	2021	2021
	2727	2784	3981	5190	6407	7630	8857		
3'-6" (42") PRECAST	2165	2289	3260	4237	5219	6204	7192	1257	1257
	2165	2215	3165	4125	5091	6061	7036		
4'-0" (48") PRECAST	1878	1989	2832	3680	4532	5387	6245	938	938
	1878	1925	2750	3583	4422	5264	6110		
4'-6" (54") PRECAST	1660	1762	2507	3257	4010	4767	5525	727	727
	1660	1705	2435	3171	3913	4658	5406		
5'-4" (64") PRECAST	1393*	1484	2110	2741	3375	4010	4648	505	505
	1393	1437	2050	2670	3293	3920	4549		
5'-10" (70") PRECAST	1272*	1357	1930	2505	3084	3665	4247	418	418
	1272	1315	1875	2441	3010	3583	4157		
6'-6" (78") PRECAST	1141*	1200	1733	2250	2769	3290	3812	707	887
	1141	1182	1684	2192	2703	3216	3732		
7'-6" (90") PRECAST	959*	912	1475	1914	2354	2797	3240	591	657
	990	1029	1466	1907	2351	2797	3245		
9'-4" (112") PRECAST	801*	612	980	1269	1560	1852	2144	454	630
	801	755	1192	1550	1910	2271	2634		
10'-6" (126") PRECAST	716*	498	793	1027	1261	1496	1731	396	493
	716	611	1039	1389	1711	2034	2358		
11'-4" (136") PRECAST	666*	439	696	899	1104	1309	1515	363	556
	666	535	905	1295	1595	1896	2198		
12'-0" (144") PRECAST	607*	400	631	816	1001	1186	1372	340	494
	631	486	818	1209	1514	1799	2086		
13'-4" (160") PRECAST	500*	340	532	686	841	997	1153	302	398
	573	409	682	1004	1367	1637	1897		
14'-0" (168") PRECAST	458*	316	493	635	778	922	1065	286	360
	548	378	629	922	1254	1567	1816		
14'-8" (176") PRESTRESSED	243	295	459	591	724	857	990	N.R.	357
	243	352	582	852	1156	1491	1742		
15'-4" (184") PRESTRESSED	228	278	430	553	677	801	925	N.R.	327
	228	329	542	791	1072	1381	1676		
17'-4" (208") PRESTRESSED	188	236	361	464	567	670	774	N.R.	255
	188	276	449	649	874	1121	1389		
19'-4" (232") PRESTRESSED	165	207	313	401	490	578	667	N.R.	204
	165	239	383	550	736	940	1160		
21'-4" (256") PRESTRESSED	145	186	278	356	433	512	590	N.R.	172
	142	212	336	477	635	807	993		
22'-0" (264") PRESTRESSED	140	180	268	343	418	493	568	N.R.	161
	137	205	322	457	607	771	947		
24'-0" (288") PRESTRESSED	127	165	244	312	380	447	515	N.R.	135
	124	186	290	408	538	680	833		

*REDUCE VALUE BY 25% FOR GRADE 40 FIELD REBAR

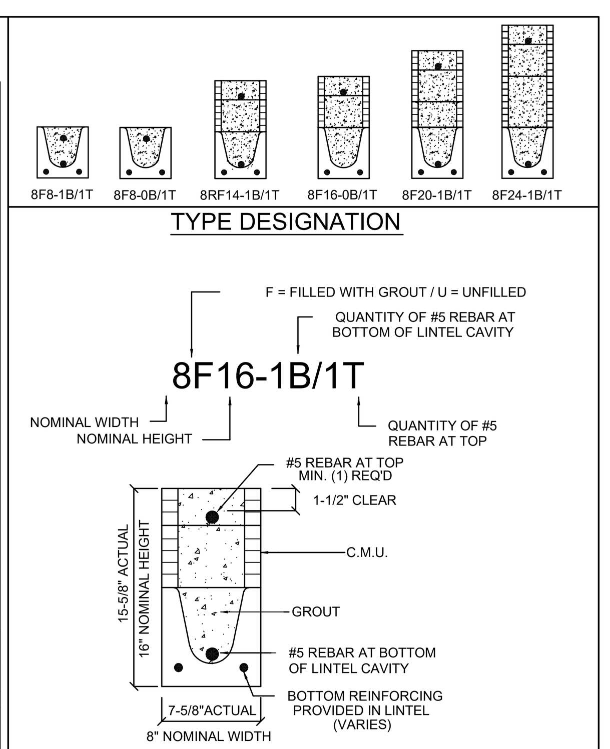

MATERIALS

1. f'c precast lintels = 3500 psi.
2. f'c prestressed lintels = 6000 psi.
3. f'c grout = 3000 psi w/ maximum 3/8" aggregate.
4. Concrete masonry units (CMU) per ASTM C90 w/ minimum net area compressive strength = 1900 psi.
5. Rebar provided in precast lintel per ASTM A615 GR60. Field rebar per ASTM A615 GR40 or GR60.
6. Prestressing strand per ASTM A416 grade 270 low relaxation.
7. 7/32 wire per ASTM A510.
8. Mortar per ASTM C270 type M or S.

GENERAL NOTES

1. Provide full mortar head and bed joints.
2. Shore filled lintels as required.
3. Installation of lintel must comply with the architectural and/or structural drawings.
4. Lintels are manufactured with 5-1/2" long notches at the ends to accommodate vertical cell reinforcing and grouting.
5. All lintels meet or exceed L/360 vertical deflection, except lintels 17'-4" and longer with a nominal height of 8" meet or exceed L/180.
6. Bottom field added rebar to be located at the bottom of the lintel cavity.
7. 7/32" diameter wire stirrups are welded to the bottom steel for mechanical anchorage.
8. Cast-in-place concrete may be provided in composite lintel in lieu of concrete masonry units.
9. Safe load ratings based on rational design analysis per ACI 318 and ACI 530

SAFE LOAD TABLE NOTES

1. All values based on minimum 4" bearing. Exception: Safe loads for unfilled lintels must be reduced by 20% if bearing length is less than 6-1/2". Safe loads for all recessed lintels based on 8" nominal bearing.
2. N.R. = Not Rated.
3. Safe loads are total superimposed allowable load on the section specified.
4. Safe loads based on grade 40 or grade 60 field rebar.
5. Additional lateral load capacity can be obtained by the designer by providing addional reinforced masonry above the precast lintel.
6. One #7 rebar may be substituted for two #5 rebars in 8" lintels only.
7. The designer may evaluate concentrated loads from the safe load tables by calculating the maximum resisting moment and shear at d-away from the face of support.
8. For composite lintel heights not shown, use safe load from next lower height.
9. All safe loads in units of pounds per linear foot.

8" PRECAST W/ 2" RECESS DOOR U-LINTELS — UPLIFT / LATERAL

LENGTH / TYPE	8RF6-1T / 8RF6-2T	8RF10-1T / 8RF10-2T	8RF14-1T / 8RF14-2T	8RF18-1T / 8RF18-2T	8RF22-1T / 8RF22-2T	8RF26-1T / 8RF26-2T	8RF30-1T / 8RF30-2T	LATERAL 8RU6	LATERAL 8RF6
4'-4" (52") PRECAST	1244	1573	2413	3260	4112	4967	5825	932	932
	1244	1519	2339	3170	4008	4850	5696		
4'-6" (54") PRECAST	1192	1507	2311	3121	3937	4756	5577	853	853
	1192	1455	2240	3036	3837	4643	5453		
5'-8" (68") PRECAST	924*	1172	1795	2423	3055	3689	4325	501	501
	924	1132	1741	2357	2978	3603	4230		
5'-10" (70") PRECAST	896*	1138	1742	2352	2965	3581	4198	469	469
	896	1099	1690	2288	2891	3497	4106		
6'-8" (80") PRECAST	778	882	1513	2042	2573	3107	3642	830	1100
	778	956	1468	1987	2509	3035	3563		
7'-6" (90") PRECAST	688	697	1325	1810	2280	2753	3227	710	941
	688	849	1302	1762	2225	2690	3157		
9'-8" (116") PRECAST	533*	433	808	1123	1413	1704	1995	516	614
	533	527	1009	1369	1728	2088	2450		

*REDUCE VALUE BY 25% FOR GRADE 40 FIELD REBAR

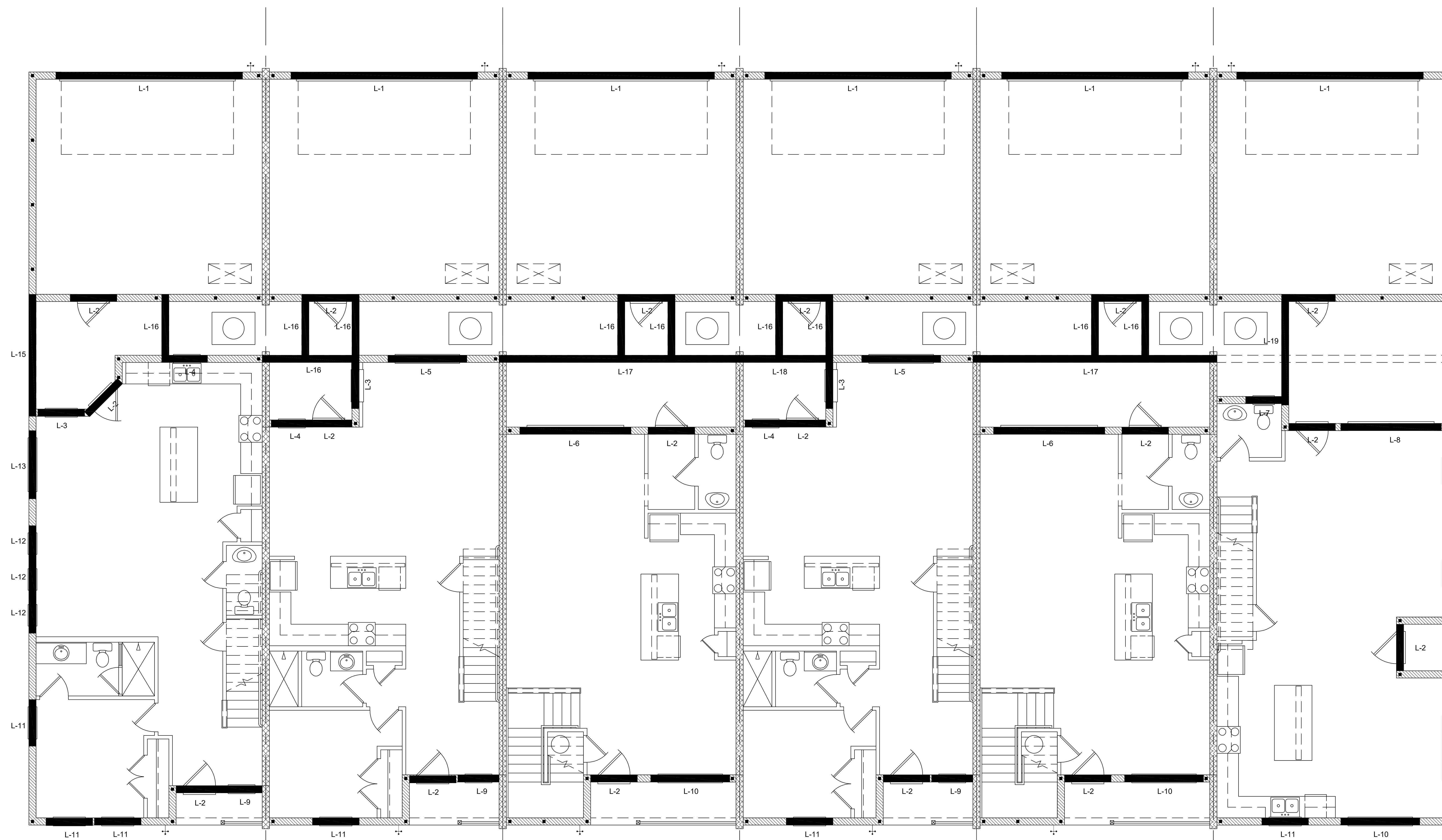

PRE CAST LINTEL PLAN
ELEVATION "A, B, C"
3/16"=1'-0" (30x42)

FIND US ON FACEBOOK & HOUZZ AT MJS CUSTOM HOME DESIGNS

THOMPSON ENGINEERING GROUP, INC.
4401 Vineland Road Suite A6 Orlando, FL. 32811
Ph: (407) 734-1450
Fax: (407) 734-1790
www.tegfl.com

MJS designers group
residential-commercial-architecture
815 Orienta Ave., Suite #1040
Altamonte Springs, Fl. 32701
Ph: (407) 629-6711
Fax: (407) 629-6776
www.mjsdesignersgroup.com

COPYRIGHT NOTICE: THESE PLANS, DESIGNS, AND IDEAS ARE THE EXCLUSIVE INTELLECTUAL PROPERTY OF MJS, INC. ALL RIGHTS RESERVED.

GOBA GREATER ORLANDO BUILDERS ASSOCIATION

6-Unit: Rear Load Detached

Models: Tyler, Jackson, Grant, Jackson, Grant & Monroe

Building Pad #XX
Lot# XX-XX, Subdivision
Street Address
City, State. Zip Code

A division of Park Square Enterprises Inc.
5200 Vineland Rd. Suite #200
Orlando, Fl. 32811
Phone: (407) 529-3000
Park Square HOMES

Carlos V:\Park Square Homes\MODELS\TOWNHOME MODELS\Townhomes (Orlando)\1- Townhome Models\Rear Load Detached Towns (Raised Heel)\6-Unit\S002 Lintel Plan 6 UNIT.dwg
Oct 17, 2022,10:29am

ISSUE DATE	10/17/2022
REVISIONS	
PROJECT:	22-1148
SCALE:	AS NOTED
DRAWN BY:	M.C.
DESIGNED BY:	MJS

LINTEL PLAN
6 UNIT
S002

© COPYRIGHT 2016 PARK SQUARE HOMES HEREBY RESERVES ITS COMMON LAW COPYRIGHTS IN THESE PLANS, IDEAS AND DESIGN. THESE PLANS, IDEAS AND DESIGNS ARE NOT TO BE COPIED OR MODIFIED IN ANY MATTER OR FORM WHATSOEVER, NOR ARE THEY TO BE ASSIGNED TO ANY THIRD PARTY WITHOUT FIRST OBTAINING THE EXPRESS WRITTEN PERMISSION FROM PARK SQUARE HOMES.

CONNECTOR SCHEDULE

CONNECT. TYPE	SIMPSON DESCRIPTION	FASTENERS PER CONNECTOR	MAX. UPLIFT	LAT. LDS. F1 / F2
4	HETA20	14-10d x 1½"	1,810	65 / 960
5	DETAL20	18-10d x 1½"	2,480	2000/ 1370
20	H3	RFT: 4-8d / PLT: 4-8d	455	125 / 160
21	H1	RFT:6-8dx1½"/PLT:4-8d	475	485 / 165
22	H10A	RFT: 8-8d x 1½"	1010	660/550
		PLT: 8-8d x 1½"		
23	LUS26	HDR: 4-10d/JST: 4-10d	935	N/A
24	H7	RFT / TRS: 4-8d	985	400 / N/A
		PLT / STD: 10-8d		
26	H2.5	RFT:5-8d / PLT: 5-8d	415	150 / 150
34	A34	H:4-8dx1½"/P:4-8dx1½"	365	280 / 303
35	A35F	H:4-8dx1½"/P:4-8dx1½"	440	440 / N/A
37	MTS12	14-10d	1,000	N/A
38	MTS16	14-10d	1,000	N/A
39	MTS30	14-10d	1000	N/A
43	LSTA12	10-10d	905	N/A
45	ST18	14-16d	1,200	N/A
47	LSTA24	18-10d	1,295	N/A
71	MSTA36	26-10d	2,135	N/A
72	MSTC66	64-16d SINKERS	5,495	N/A
79	SP1	STD:6-10d / PLT:4-10d	535	560 / 260
80	SP2	STD:6-10d / PLT:6-10d	605	560 / 260
81	SPH4,6,8	12-10d x 1½"	885	N/A
90	ABU66	12-16d	2,240	N/A
89	CB66	(2) 7/8" BOLTS	2,300	985
92	ABU44	12-16d	2,200	N/A
93	AC6 (MAX)	28-16d	1,815	1,070
94	AC4 (MAX)	28-16d	1,815	1,070
95	HTS20	20-10d	1,450	N/A
96	HD8A	SILL: 7/8" BOLT	7,910	N/A
		STUD:(3) 7/8"X5½" BOLTS		
97	MTSM16	BLOCK: 4-¼"X2½" TC JOIST : 7-10d	860	N/A
98	HTT4	SILL: 7/8" BOLT	4,235	N/A
		STRAP: 18-16d		
99	A35	H:4-8dx1½"/P:4-8dx1½"	440	440 / N/A
102	HTT5	7/8" BOLT/ 26-10d	4,275	N/A
103	VGTR/L	32-SDS¼"X3"(2) 7/8" BLT	3,990	N/A
104	HDU8-SDS2.5	7/8" BLT/20-SDS ¼"x2½"	5,020	N/A
110	HCP2	12-10d x 1½"	520	260 / N/A
167	HHUS46	H:14-16d/J:6-16d	1,550	N/A
168	U46	H:8-10d/J:4-10d	710	N/A
181	HUS26	20-16d	1,550	N/A
184	HUC28-2	H:14-16d/J:4-10d	1,085	N/A
214	HUC212-3TF	HD:16-3/16"X1½" TAPCON BM: 6-16d	1,135	N/A
215	HGUS210-2	HDR:46-16d/JST:10-16d	2,720	N/A
216	HUS412	BLOCK: 10-¼"X1½" TC JOIST : 10-16d	3,240	N/A
217	HUS212-2	BLOCK: 10-¼"X1½" TC JOIST : 10-16d	2,630	N/A
219	MBHA412	H:1-ATR3/4X8 TOP&FACE	3,145	N/A
		JOIST: 18-10d		
220	N/A	N/A	1,620	N/A
226	MBHA4.75/12	HDR : (2) 3/4" φ x 8" JOIST : 18-10d	2,160	N/A
231	MBHA3.56/16	HDR : (2) 3/4" φ x 8" JOIST : 18-10d	3,450	N/A
232	MBHA5.50/16	HDR : (2) 3/4" φ x 8" JOIST : 18-10d	3,450	N/A
240	H16	R:2-10dx1½"P:10-10dx1½"	1,470	480 / N/A
300	WALL 9'-4"	LGT2	30-16d-sinker	2000	1015 / 440
301	MGT	(1) 5/8"BLTS./GIR: 22-10d	3,965	N/A
302	WALL 15'-1"	HGT-2 or 3	LTL:3/4"BLTS./GIR: 8-10d	6485	N/A
303	HGT-4	LTL:3/4"BLTS./GIR: 16-10d	9,250	N/A
401	SURL414	FACE:18-16d/JST:8-16d	1,700	N/A
T	CONNECTORS TO BE SPECIFIED & PROVIDED BY TRUSS MANUFACTURERS			

COMPONENT & CLADDING DESIGN WIND PRESSURES

SEE PLAN DESIGN WIND PRESSURE

+XXX.X -XXX.X	ULTIMATE DESIGNED POSITIVE PRESSURE ULTIMATE DESIGNED NEGATIVE PRESSURE

NOTE: DESIGN PRESSURES BASED ULTIMATE WIND SPEED TO OBTAIN NOMINAL %20" WIND PRESSURES MULTIPLY VALUES SHOWN BY A FACTOR OF 0.6

FIELD REPAIR NOTES

1- MISSED FOOTING DOWELS MAY BE SUBSTITUTED W/ A STRAIGHT #5 REBAR SET IN A 3/4" DIA. x 6" DEEP HOLE FILLED W/ UNITEX PROPOXY 300 OR SIMPSON SET OR ETP ADHESIVES.

2- BLOCK WALL OVERHANGING SLAB CONDITION: UP TO 7/8" - NO REPAIR NECESSARY 7/8" TO 1½" - ADD FILLED CELL (NO VERTICAL STEEL) MIDPOINT OF WALL BETWEEN EXISTING FILLED CELLS (WITH STEEL) IN AREAS AFFECTED: 1½" + - REQUIRE SPECIAL ENGINEERING LETTER.

3- PENETRATION OF PLUMBING PIPES/DRYER VENTS THRU PLATES OF A LOAD BEARING WALL MAY OCCUR PROVIDED DBL. STUDS ARE ADDED ON EITHER SIDE OF PENETRATION WITHIN 3" AND TRUSS/FLOOR TRUSS IS NO CLOSER THAN 3" FROM PENETRATION. ADD (1) MTS12 @ TOP AND BOTTOM PLATE

NOTES

1. TYPICAL ROOF GABLE OVERHANG TO BE 12" UNLESS OTHERWISE NOTED.
2. TYPICAL ROOF EAVES OVERHANG TO BE 16" UNLESS OTHERWISE NOTED.
3. PROVIDE AND INSTALL FLASHING AND ROOFING AS PER NATIONAL ROOFING AND SHEET METAL ASSOC.STANDARDS AND/ OR ACCEPTABLE INDUSTRY PRACTICE AND IN ACCORDANCE WITH 6TH EDITION (2017)FLORIDA RESIDENTIAL CODE.
4. ALL ROOF TRUSSES, GIRDERS, BEAMS, HEADERS, ETC. TO BE SIZE BY TRUSS MANUFACTURER OR FL. REG. ENG.
5. TRUSSES SHALL BE BRACED TO PREVENT ROTATION & PROVIDE LATERAL STABILITY KIN ACCORDANCE WITH THE REQUIREMENTS SPECIFIED IN THE CONSTRUCTION DOCUMENTS FOR BUILDING & ON THE INDIVIDUAL TRUSS DESIGN DRAWINGS IN THE ABSENCE OF SPECIFIC BRACING REQUIREMENTS, TRUSSES SHALL BE BRACED IN ACCORDANCE WITH TPI/WTCA BCSI 1.
6. REFER TO TRUSS MANUFACTURERS DRAWINGS FOR TRUSS PLACEMENT & TRUSS TO TRUSS CONNECTIONS.
7. ROOF UNDERLAYMENT TO BE USED IS 30 LBS. SYNTHETIC FELT.
8. SHINGLE ROOF : UNDERLAYMENT TO BE INSTALLED IAW FBCR 2020, 7TH EDITION R905.1.1. UNDERLAYMENT MATERIALS REQUIRED TO COMPLY WITH ASTM D226, D1970, D4869 AND D6757 SHALL BEAR A LABEL INDICATING COMPLIANCE TO THE STANDARD DESIGNATION AND, IF APPLICABLE, TYPE CLASSIFICATION INDICATED IN TABLE R905.1.1. UNDERLAYMENT SHALL BE APPLIED AND ATTACHED IN ACCORDANCE WITH TABLE R905.1.1.
9. OFF RIDGE VENTS MAXIMUM OPENING SIZES:
-LOMANCO: (2) 9/2" DIA.CIRCLES
-MILLENNIUM METAL: 2⅞"x46" HOLE

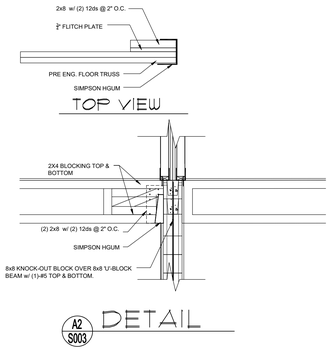

A2 S003 DETAIL

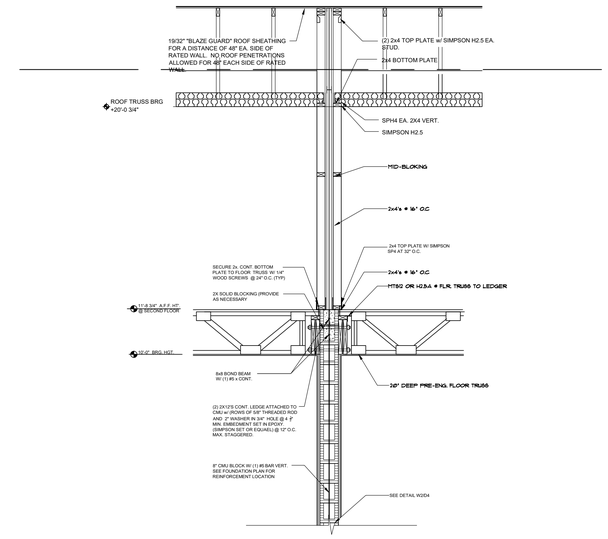

A1 S003 PARTY WALL SECTION
3/4" = 1'-0"

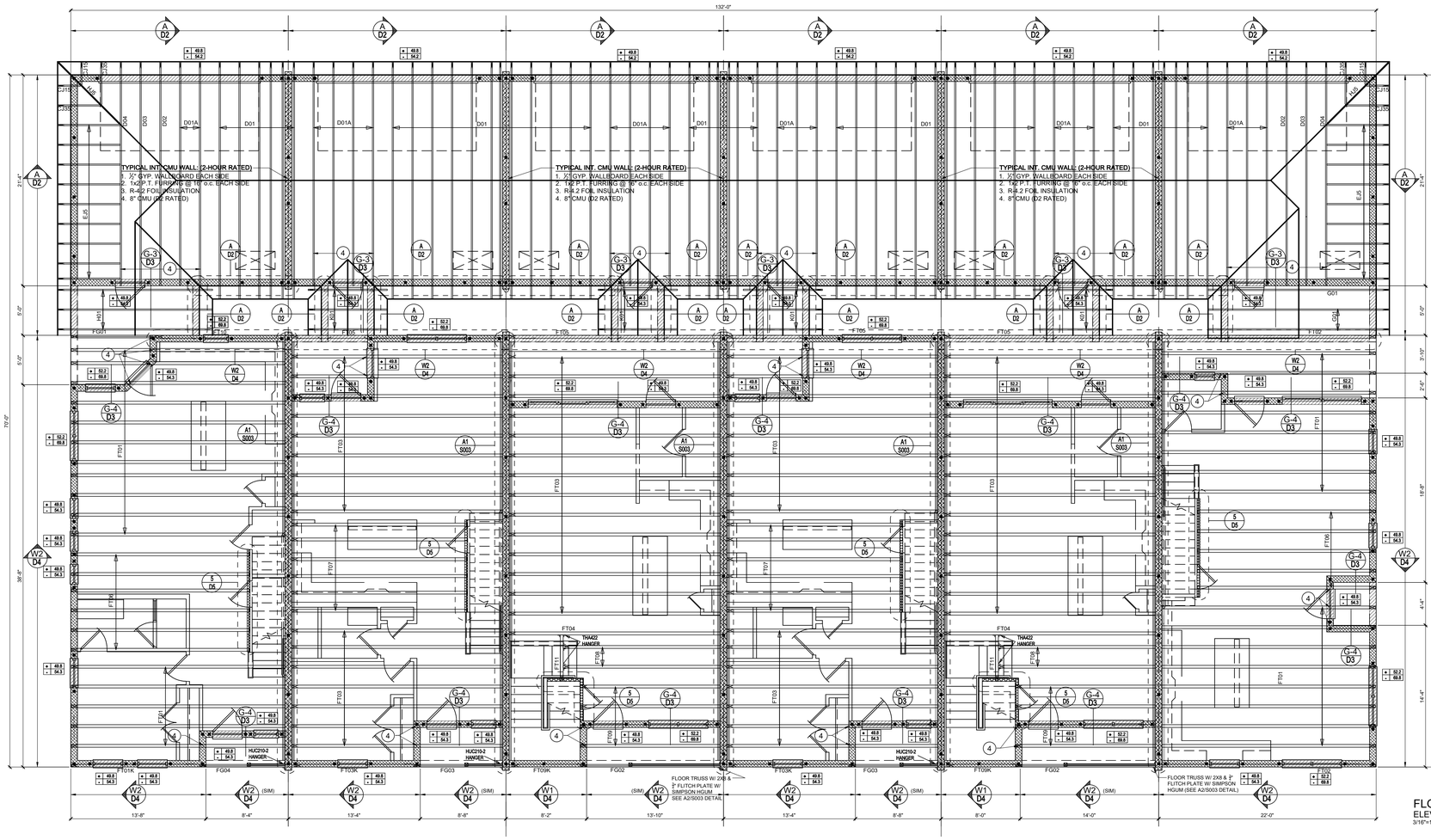

FLOOR FRAMING PLAN
ELEVATION "A,B,C,D"
3/16"=1'-0" (30x42)

Tyler Unit-A: LOT# XX

Jackson Unit-B: LOT# XX

Grant Unit-C: LOT# XX

Jackson Unit-B: LOT# XX

Grant Unit-C: LOT# XX

Monroe Unit-D: LOT# XX

houzz FIND US ON FACEBOOK & HOUZZ AT MJS CUSTOM HOME DESIGNS

THOMPSON ENGINEERING GROUP, INC.
4401 Vineland Road Suite #6 Orlando, FL 32811
Ph: (407) 734-1450
Fax: (407) 734-1790
www.engfl.com

815 Orienta Ave., Suite #1040
Altamonte Springs, Fl. 32701
Ph: (407) 629-6711
Fax: (407) 629-6776
www.mjsdesignersgroup.com
COPYRIGHT NOTICE: THESE PLANS, DESIGNS, AND IDEAS ARE THE EXCLUSIVE INTELLECTUAL PROPERTY OF MJS. THEY ARE ALL RIGHTS RESERVED.

designers group
residential-commercial-architecture

A division of Park Square Enterprises Inc.
5200 Vineland Rd. Suite #200
Orlando, Fl. 32811
Phone: (407) 529-3000

Park Square HOMES

6-Unit: Rear Load Detached

Models: Tyler, Jackson, Grant, Jackson, Grant & Monroe

Building Pad #XX
Lot# XX-XX, Subdivision
Street Address
City, State, Zip Code

ISSUE DATE	10/17/2022
REVISIONS	
PROJECT:	22-1148
SCALE:	AS NOTED
DRAWN BY:	M.C.
DESIGNED BY:	MJS

FLOOR PLAN
6 UNIT

S003

Oct 17, 2022, 10:30am Carlos V:\Park Square Homes\MODELS\TOWNHOME MODELS\Townhomes (Orlando)\1-Townhome Models\Rear Load Detached Towns (Raised Heel)\6-Unit\S003 Floor Plan 6 UNIT.dwg

AIBD

GOBA GREATER ORLANDO BUILDERS ASSOCIATION

© COPYRIGHT 2016 PARK SQUARE HOMES HEREBY RESERVES ITS COMMON LAW COPYRIGHTS IN THESE PLANS, IDEAS AND DESIGN. THESE PLANS, IDEAS AND DESIGNS ARE NOT TO BE COPIED OR MODIFIED IN ANY MATTER OR FORM WHATSOEVER, NOR ARE THEY TO BE ASSIGNED TO ANY THIRD PARTY WITHOUT FIRST OBTAINING THE EXPRESS WRITTEN PERMISSION FROM PARK SQUARE HOMES.

CONNECTOR SCHEDULE

CONNECT. TYPE	SIMPSON DESCRIPTION	SIMPSON FASTENERS PER CONNECTOR	MAX. UPLIFT	LAT. LDS. F1 / F2
4	HETA20	14-10d x 1½"	1,810	65 / 960
5	DETAL20	18-10d x 1½"	2,480	2000/ 1370
20	H3	RFT: 4-8d / PLT: 4-8d	455	125 / 160
21	H1	RFT:6-8dx1½"/PLT:4-8d	475	485 / 165
22	H10A	RFT: 8-8d x 1½"	1010	660/550
		PLT: 8-8d x 1½"		
23	LUS26	HDR: 4-10d/JST: 4-10d	935	N/A
24	H7	RFT / TRS: 4-8d	985	400 / N/A
		PLT / STD: 10-8d		
26	H2.5	RFT:5-8d / PLT: 5-8d	415	150 / 150
34	A34	H:4-8dx1½"/P:4-8dx1½"	365	280 / 303
35	A35F	H:4-8dx1½"/P:4-8dx1½"	440	440 / N/A
37	MTS12	14-10d	1,000	N/A
38	MTS16	14-10d	1,000	N/A
39	MTS30	14-10d	1000	N/A
43	LSTA12	10-10d	905	N/A
45	ST18	14-16d	1,200	N/A
47	LSTA24	18-10d	1,295	N/A
71	MSTA36	26-10d	2,135	N/A
72	MSTC66	64-16d SINKERS	5,495	N/A
79	SP1	STD:6-10d / PLT:4-10d	535	560 / 260
80	SP2	STD:6-10d / PLT:6-10d	605	560 / 260
81	SPH4,6,8	12-10d x 1½"	885	N/A
90	ABU66	12-16d	2,240	N/A
89	CB66	(2) 7/8" BOLTS	2,300	985
92	ABU44	12-16d	2,200	N/A
93	AC6 (MAX)	28-16d	1,815	1,070
94	AC4 (MAX)	28-16d	1,815	1,070
95	HTS20	20-10d	1,450	N/A
96	HD8A	SILL: 7/8" BOLT	7,910	N/A
		STUD:(3) 7/8"X5½" BOLTS		
97	MTSM16	BLOCK: 4-¼"X2½" TC JOIST : 7-10d	860	N/A
98	HTT4	SILL: 7/8" BOLT	4,235	N/A
		STRAP: 18-16d		
99	A35	H:4-8dx1½"/P:4-8dx1½"	440	440 / N/A
102	HTT5	7/8" BOLT/ 26-10d	4,275	N/A
103	VGTRL	32-SDS¼"X3"(2) 7/8" BLT	3,990	N/A
104	HDU8-SDS2.5	7/8" BLT/20-SDS ¼"x2½"	5,020	N/A
110	HCP2	12-10d x 1½"	520	260 / N/A
167	HHUS46	H:14-16d/J:6-16d	1,550	N/A
168	U46	H:8-10d/J:4-10d	710	N/A
181	HUS26	20-16d	1,550	N/A
184	HUC28-2	H:14-16d/J:4-10d	1,085	N/A
214	HUC212-3TF	HD:16-3/16"X1½" TAPCON BM: 6-16d	1,135	N/A
215	HGUS210-2	HDR:46-16d/JST:10-16d	2,720	N/A
216	HUS412	BLOCK: 10-¾"X1½" TC JOIST : 10-16d	3,240	N/A
217	HUS212-2	BLOCK: 10-¾"X1½" TC JOIST : 10-16d	2,630	N/A
219	MBHA412	H:1-ATR3/4X8 TOP&FACE	3,145	N/A
		JOIST: 18-10d		
220	N/A	N/A	1,620	N/A
226	MBHA4.75/12	HDR : (2) 3/4" φ x 8" JOIST : 18-10d	2,160	N/A
231	MBHA3.56/16	HDR : (2) 3/4" φ x 8" JOIST : 18-10d	3,450	N/A
232	MBHA5.50/16	HDR : (2) 3/4" φ x 8" JOIST : 18-10d	3,450	N/A
240	H16	R:2-10dx1½"P:10-10dx1½"	1,470	480 / N/A
301	LGT2	30-16d-sinker	2000	1015 / 440
301	MGT	(1) 5/8"BLTS./GIR: 22-10d	3,965	N/A
302	HGT-2 or 3	LTL:3/4"BLTS./GIR: 8-10d	6485	N/A
303	HGT-4	LTL:3/4"BLTS./GIR: 16-10d	9,250	N/A
401	SURL414	FACE:18-16d/JST:8-16d	1,700	N/A
T	CONNECTORS TO BE SPECIFIED & PROVIDED BY TRUSS MANUFACTURERS			

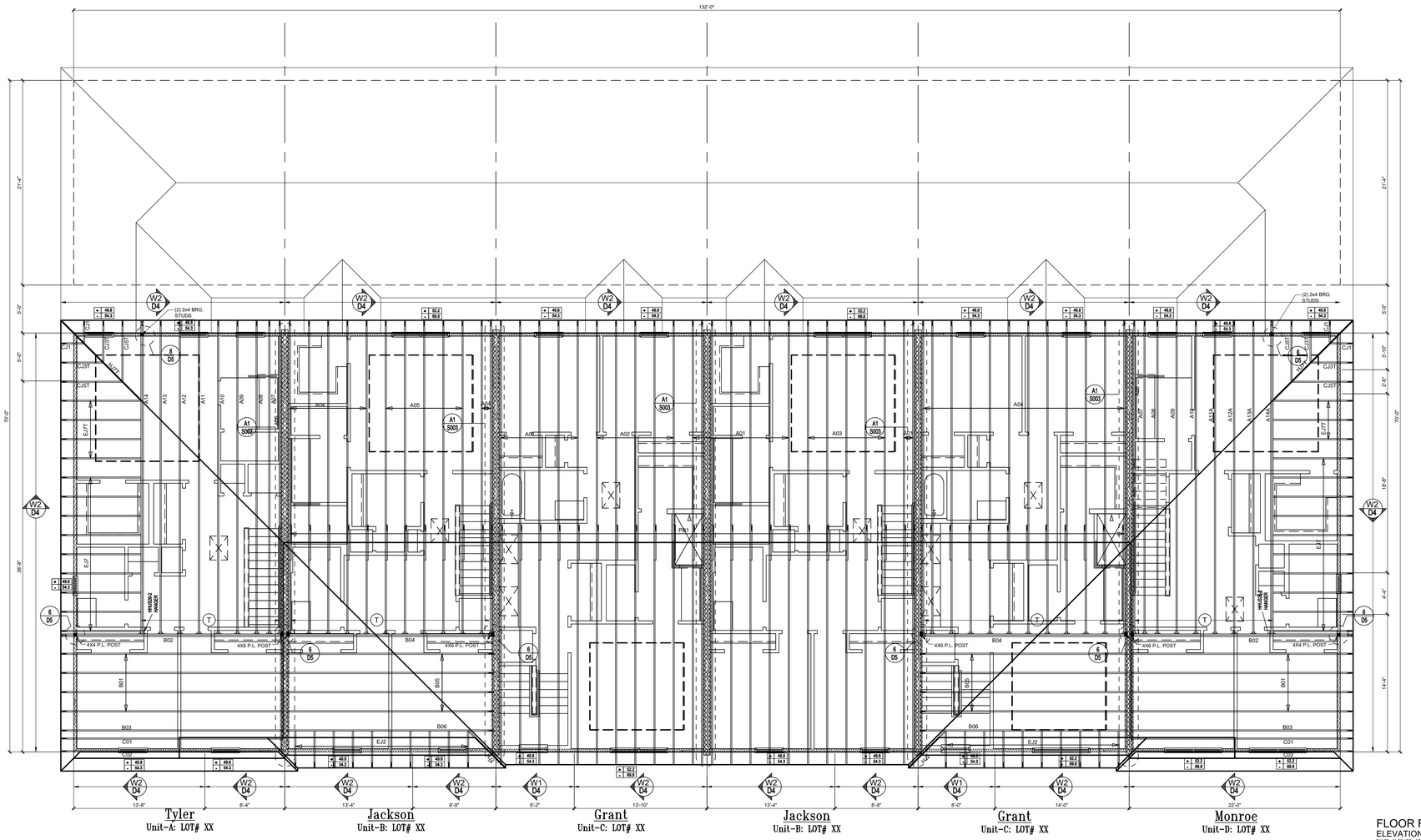

FLOOR FRAMING PLAN
ELEVATION "A,B,C,D"
3/16"=1'-0" (30x42)

COMPONENT & CLADDING DESIGN WIND PRESSURES

SEE PLAN DESIGN WIND PRESSURE

+ XXX	ULTIMATE DESIGNED POSITIVE PRESSURE
- XXX	ULTIMATE DESIGNED NEGATIVE PRESSURE

NOTE: DESIGN PRESSURES BASED ULTIMATE WIND SPEED TO OBTAIN NOMINAL "ASD" WIND PRESSURES MULTIPLY VALUES SHOWN BY A FACTOR OF 0.6

FIELD REPAIR NOTES

1- MISSED FOOTING DOWELS MAY BE SUBSTITUTED W/ A STRAIGHT #5 REBAR SET IN A 3/4" DIA. x 4" DEEP HOLE FILLED W/ UNITEX PROPOXY 300 OR SIMPSON SET OR ETF ADHESIVES.

2- BLOCK WALL OVERHANGING SLAB CONDITION: UP TO 7/8" - NO REPAIR NECESSARY 7/8" TO 1½" - ADD FILLED CELL (NO VERTICAL STEEL) MIDPOINT OF WALL BETWEEN EXISTING FILLED CELLS (WITH STEEL) IN AREAS AFFECTED. 1½" + - REQUIRE SPECIAL ENGINEERING LETTER.

3- PENETRATION OF PLUMBING PIPES/DRYER VENTS THRU PLATES OF A LOAD BEARING WALL MAY OCCUR PROVIDED STUDS ARE ADDED ON EITHER SIDE OF PENETRATION, STUDS, PLATE AND TRUSS/FLOOR TRUSS IS NO CLOSER THAN 3" FROM PENETRATION. ADD (1) MTS12 @ TOP AND BOTTOM PLATE

NOTES

1. TYPICAL ROOF GABLE OVERHANG TO BE 12" UNLESS OTHERWISE NOTED.

2. TYPICAL ROOF EAVES OVERHANG TO BE 16" UNLESS OTHERWISE NOTED.

3. PROVIDE AND INSTALL FLASHING AND ROOFING AS PER NATIONAL ROOFING AND SHEET METAL ASSOC.STANDARDS AND/ OR ACCEPTABLE INDUSTRY PRACTICE AND IN ACCORDANCE WITH 6TH EDITION (2017)FLORIDA RESIDENTIAL CODE.

4. ALL ROOF TRUSSES, GIRDERS, BEAMS, HEADERS, ETC. TO BE SIZE BY TRUSS MANUFACTURER OR FL. REG. ENG.

5. TRUSSES SHALL BE BRACED TO PREVENT ROTATION & PROVIDE LATERAL STABILITY KIN ACCORDANCE WITH THE REQUIREMENTS SPECIFIED IN THE CONSTRUCTION DOCUMENTS FOR BUILDING & ON THE INDIVIDUAL TRUSS DESIGN DRAWINGS IN THE ABSENCE OF SPECIFIC BRACING REQUIREMENTS, TRUSSES SHALL BE BRACED IN ACCORDANCE WITH TPI/WTCA BCSI 1.

6. REFER TO TRUSS MANUFACTURERS DRAWINGS FOR TRUSS PLACEMENT & TRUSS TO TRUSS CONNECTIONS.

7. ROOF UNDERLAYMENT TO BE USED IS 30 LBS. SYNTHETIC FELT.

8. SHINGLE ROOF : UNDERLAYMENT TO BE INSTALLED IAW FBCR 2020, 7TH EDITION R905.1.1. UNDERLAYMENT MATERIALS REQUIRED TO COMPLY WITH ASTM D226, D1970, D4869 AND D6757 SHALL BEAR A LABEL INDICATING COMPLIANCE TO THE STANDARD DESIGNATION AND, IF APPLICABLE, TYPE CLASSIFICATION INDICATED IN TABLE R905.1.1. UNDERLAYMENT SHALL BE APPLIED AND ATTACHED IN ACCORDANCE WITH TABLE R905.1.1.

9. OFF RIDGE VENTS MAXIMUM OPENING SIZES:
- LOMANCO: (2) 9⅝" DIA.CIRCLES
-MILLENNIUM METAL: 2⅞"x46" HOLE

houzz FIND US ON FACEBOOK & HOUZZ AT MJS CUSTOM HOME DESIGNS

THOMPSON ENGINEERING GROUP, INC.
4401 Vineland Road Suite #5 Orlando, FL 32811
Ph: (407) 734-1450
Fax: (407) 734-1790
www.tegfl.com

815 Orienta Ave., Suite #1040
Altamonte Springs, Fl. 32701
Ph: (407) 629-6711
Fax: (407) 629-6776
www.mjsdesignersgroup.com
COPYRIGHT NOTICE: THESE PLANS, DESIGNS, AND IDEAS ARE THE EXCLUSIVE INTELLECTUAL PROPERTY OF MJS. THEY ARE ALL RIGHTS RESERVED.

designers group
residential-commercial-architecture

AIBD

GOBA
GREATER ORLANDO BUILDERS ASSOCIATION

6-Unit: Rear Load Detached

Models: Tyler, Jackson, Grant, Jackson, Grant & Monroe

Building Pad #:XX
Lot# XX-XX, Subdivision
Street Address
City, State, Zip Code

A division of Park Square Enterprises Inc.
5200 Vineland Rd. Suite #200
Orlando, Fl. 32811
Phone: (407) 529-3000

Park Square HOMES

ISSUE DATE	10/17/2022
REVISIONS	
PROJECT:	22-1148
SCALE:	AS NOTED
DRAWN BY:	M.C.
DESIGNED BY:	MJS

FLOOR PLAN
6 UNIT
S004

Oct 17, 2022 10:30am Carlos V:\Park Square Homes\MODELS\TOWNHOME MODELS\Townhomes (Orlando)\1-Townhome Models\Rear Load Detached Towns (Raised Heel)\6-Unit\S004 Roof Plan 6 UNIT.dwg

© COPYRIGHT 2016 PARK SQUARE HOMES HEREBY RESERVES ITS COMMON LAW COPYRIGHTS IN THESE PLANS, IDEAS AND DESIGN. THESE PLANS, IDEAS AND DESIGNS ARE NOT TO BE COPIED OR MODIFIED IN ANY MATTER OR FORM WHATSOEVER, NOR ARE THEY TO BE ASSIGNED TO ANY THIRD PARTY WITHOUT FIRST OBTAINING THE EXPRESS WRITTEN PERMISSION FROM PARK SQUARE HOMES.

STRUCTURAL NOTES

1. THIS STRUCTURE HAS BEEN DESIGNED IN ACCORDANCE WITH THE 7TH EDITION, FBCR 2020 (WIND LOAD @ 150 MPH.)
   LIVE LOAD ROOF: 20 PSF.
   FLOOR: 40 PSF, BALCONIES & STAIRS: 40 PSF
   OCCUPANCY= 1.0
   BUILDING CATEGORY R3, WIND EXPOSURE C
   INTERNAL PRESSURE COEFFICIENTS = +0.18 AND -0.18
2. WINDOWS, DOORS, AND GARAGE DOORS TO BE DESIGNED TO MEET FBCR SECTION R301
3. ALL FLOOR SLABS TO BE OF 2,500 PSI CONC. PLANT MIX MIN. 5" THICK WITH 6x6 10/10 WIRE MESH 6 MIL. POLY. VAPOR-BARRIER OVER TERMITE TREATED COMPACTED CLEAN FILL.
4. CONCRETE MASONRY UNITS SHALL MEET: CH. 1-3 OF ACI 530-02/ ASCE 5-02/TMS 402-02 OR BIA BUILDING CODE REQUIREMENTS.
5. MORTAR TO BE TYPE "M" OR "S", GROUT - 2,500 PSI @ 28 DAYS.
6. MASONRY CLEAN OUTS REQUIRED @ GROUT GREATER THAN FIVE (5) FEET IN HEIGHT AND ALL VERTICALS.
7. REBAR TO BE # 5'S GRADE 60, W/ MIN. LAP OF 25". USE "L" BARS @ CORNERS AND USE STANDARD HOOKS @ CHANGE IN DIRECTION WITH MIN. LAP 12"
8. GYP. BD. CEILING SHALL BE INSTALLED PERP. TO FRAMING & NAILED @ 7" O.C. WITH 5d NAILS. GYP. BD. WALLS SHALL BE NAILED @8" O.C. WITH 5d NAILS
9. UPLIFT CONNECTOR'S TO PROVIDE CONTINUITY FROM ROOF TRUSSES THRU PLATES TO SLAB AND FOUNDATION PER ENCLOSED DETAILS.
10. EPOXY ANCHOR ALTERNATIVE:
    THREADED ANCHOR ROD MAY BE USED IN LIEU OF ANCHOR BOLTS FOR USE AS PLATE ANCHORS OR HURRICANE ANCHORS.
    THE FOLLOWING CRITERIA MUST BE MET:

ANCHOR SIZE	CONC. HOLE SIZE	MIN. HOLE DEPTH
½"	-3/4"	7"
-5/8"	-7/8"	7"
-3/4"	1"	8"
-7/8"	1-1/8"	9"

    AFTER HOLE IS DRILLED, ALL CONCRETE DUST MUST BE REMOVED PRIOR TO EPOXY INSTALLATION. THREADED ROD TO BE MIN. A36 STEEL AND FREE OF DIRT OR GREASE. LOAD ON ROD CANNOT BE APPLIED UNTIL 12 HOURS AFTER INSTALLATION. 2 COMPONENT EPOXY RESIN MATERIAL TO BE MIXED PER MFG. DIRECTIONS.
11. SOIL BEARING CAPACITY 2000 PSF MINIMUM

WOOD STRUCTURAL NOTES

1. ALL WOOD TO BE SPECIES, GROUP, AND GRADE AS NOTED BELOW. DAMAGED WOOD NOT TO BE USED.
2. ALL STRUCTURAL LUMBER SHALL BE SPF (SPRUCE-PINE-FIR) #2 OR BETTER UNLESS OTHERWISE NOTED. (PRE ENG. TRUSSES EXCLUDED)
3. END JOINT IN STRUCTURAL DOUBLE TOP PLATE TO BE OFFSET AT LEAST 4". STRUCTURAL DOUBLE PLATES TO BE NAILED @ 6" O.K..
4. PLYWOOD OR OSB. WALL SHEATHING NAIL PATTERN TO BE 10d @ 6" O.C.. UNLESS OTHERWISE NOTED.
5. NUMBER OF HEADER STUDS AND ADJACENT FULL LENGTH STUDS PER WALL AND HEADER STUD REQUIREMENT SCHEDULE.
6. MAX. 1" HOLE DRILLED INTO EXTERIOR STRUCTURAL STUDS.
7. DBL. STUDS @ EA. END OF SHEAR WALL.
8. WHEN ANCHORING MULTIPLE WD. ITEMS TOGETHER, THE LENGTH OF HURRICANE STRAP MUST BE CENTERED.
9. NAIL PATTERN
   -DOUBLE PLATE 12" O.C.. OUTSIDE SPLICE ZONE (SEE NOTE 4)
   -DOUBLE STUDS @ 12" O.C..
   -DOUBLE OR TRIPLE HEADER @ 6" O.C.. @ EDGE @ 12" O.C.. INTERMEDIATE.
   -HEADER TO STUD @ 4" O.C.. EA. HEADER MEMBER.
   -STUD TO TOP OR BOTTOM PLATE : (2) 16d THRU PLT. OR (2) 16d EA. SIDE TOE NAILED TO PLT.
10. -ROOF SHEATHING FOR SHINGLE ROOF TO BE MIN. 19/32 OSB, NAILED TO ROOF TRUSSES SPACED @ 24" O.C. (MAX) WITHOUT BLOCKING.

    -ROOF SHEATHING FOR TILE ROOF TO BE MIN. 19/32" OSB, 1/2" CDX PLYWOOD OR 1/2" ADVANTECH. NAILED TO ROOF TO ROOF TRUSS SPACED @ 24" O.C. (MAX) WITHOUT BLOCKING.
11. FLOOR SHEATHING TO BE MIN. 23/32" PLYWOOD NAILED @ 6" O.C. W/ #8 RING SHANK NAILS AND LIQUID NAIL ADHESIVE.
12. ALL FLOOR TRUSSES TO BE END BLOCKED @ BEARING LOCATIONS
13. TRUSS BRACING PER TRUSS MANUFACTURE'S DRAWINGS.
14. ALL NAILING SPECIFIED TO BE APPLIED BY NAIL GUN OR MANUALLY
15. ALL WOOD IN DIRECT CONTACT WITH MASONRY SHALL BE PRESSURE TREATED.
16. 2000 PSF MINIMUM SOIL BEARING CAPACITY

FIELD REPAIR NOTES

1. MISSED LINTEL STRAPS FOR MASONRY CONSTRUCTION MAY BE SUBSTITUTED W/ (1) USP MTW16 OR HC10 OR SIMPSON MTSM16 W/ (4) -1/4" X 2-1/4" TAPCONS TO BOND BEAM AND (7) 10d NAILS TO TRUSS FOR UPLIFTS LESS THAN 860 LBS (USE (2) MTSM16 FOR UPLIFTS LESS THAN 1720#). NO MORE THAN 10 STRAPS MAY BE SUBSTITUTED OR NO MORE THAN 3 IN A ROW. IF GIRGER TRUSS CONNECTIONS ARE MISSED CONTACT ENGINEER FOR SUBTITUTION
2. MISSED J-BOLTS FOR FRAMED EXTERIOR/ BEARING WALLS MAY BE SUBSTITUTED W/ 1/2" DIA. x 7" LONG WEDGE ANCHORS (REDHEADS).
3. MISSED FOOTING DOWELS MAY BE SUBSTITUTED W/ A STRAIGHT #5 REBAR SET IN A 3/4" DIA. x 6" DEEP HOLE FILLED W/ UNITEX PROPOXY 300 OR SIMPSON SET OR ETF ADHESIVES.
4. BLOCK WALL OVERHANGING SLAB CONDITION:
   UP TO -7/8" - NO REPAIR NECESSARY
   -7/8" TO 1-1/4" - ADD FILLED CELL (NO VERTICAL STEEL) MIDPOINT OF WALL BETWEEN EXISTING FILLED CELLS (WITH STEEL) IN AREAS AFFECTED
   1-1/4"+ - REQUIRE SPECIAL ENGINEERING LETTER
5. PENETRATION OF PLUMBING PIPES/DRYER VENTS THRU PLATES OF A LOAD BEARING WALL MAY OCCUR PROVIDED DBL. STUDS ARE ADDED ON EITHER SIDE OF PENETRATION WITHIN 3" AND TRUSS/ FLOOR TRUSS IS NO CLOSER THAN 3" FROM PENETRATION. ADD (1) MTS12 @ TOP AND BOTTOM PLATE

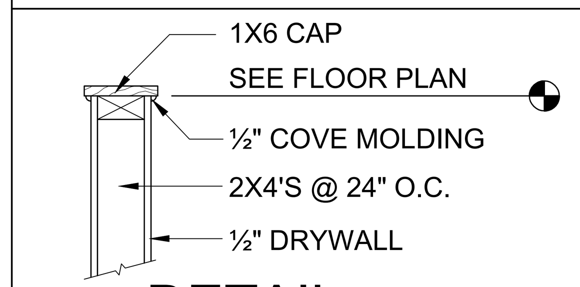

3 D1 DETAIL
1/2"= 1'-0"

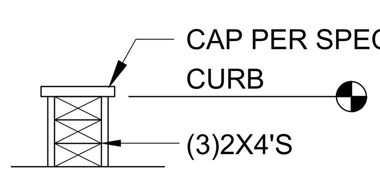

4 D1 DETAIL
1/2"= 1'-0"

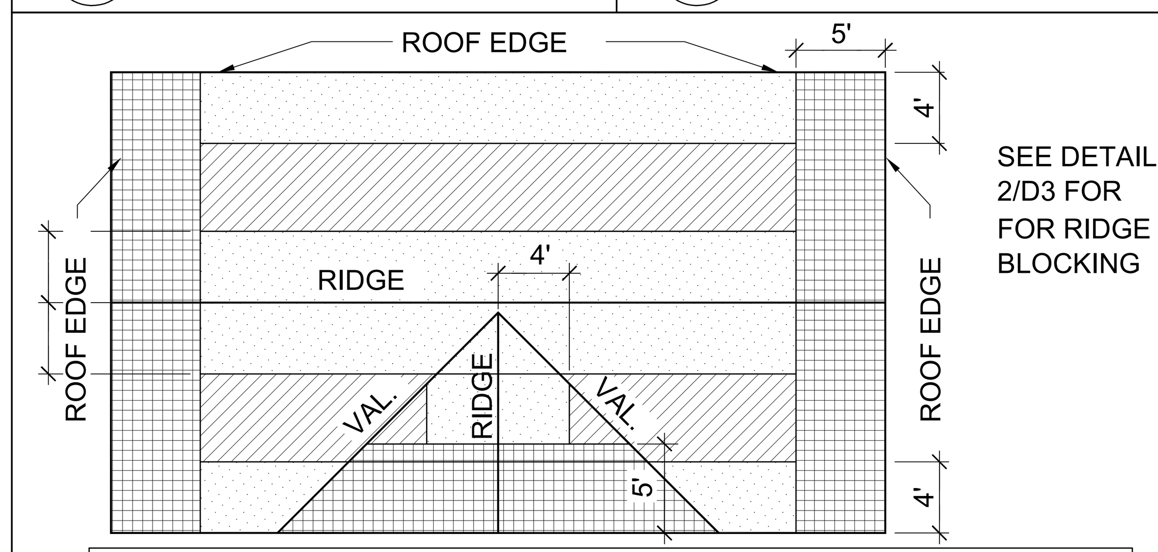

ROOF NAILING PATTERN		
ZONE:	(diagonal hatch)	8d NAILS @ 6" O.C. EDGES AND 6" O.C. FIELD
ZONE:	(dotted)	8d NAILS @ 6" O.C. EDGES AND 6" O.C. FIELD
ZONE:	(grid)	8d NAILS @ 4" O.C. EDGES AND 4" O.C. FIELD

NOTE:
NO STRAPPING NEEDED WHEN FRAMING PER DETAIL 1 D5

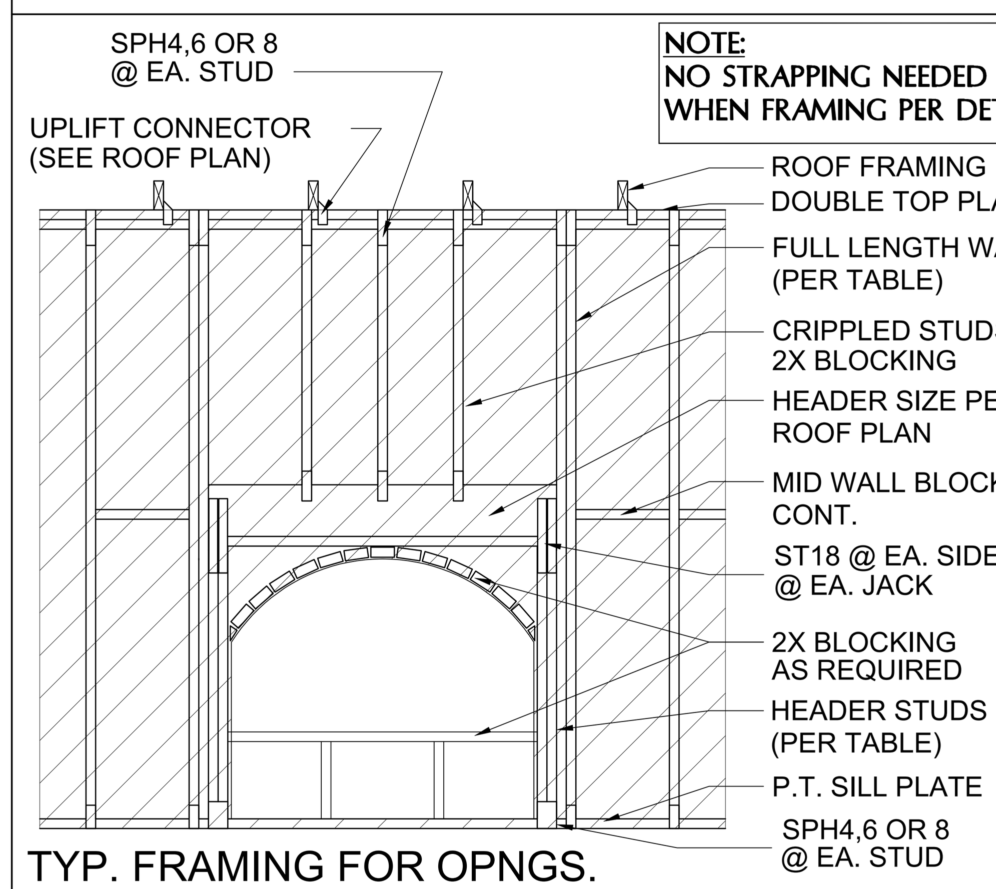

TYP. FRAMING FOR OPNGS.

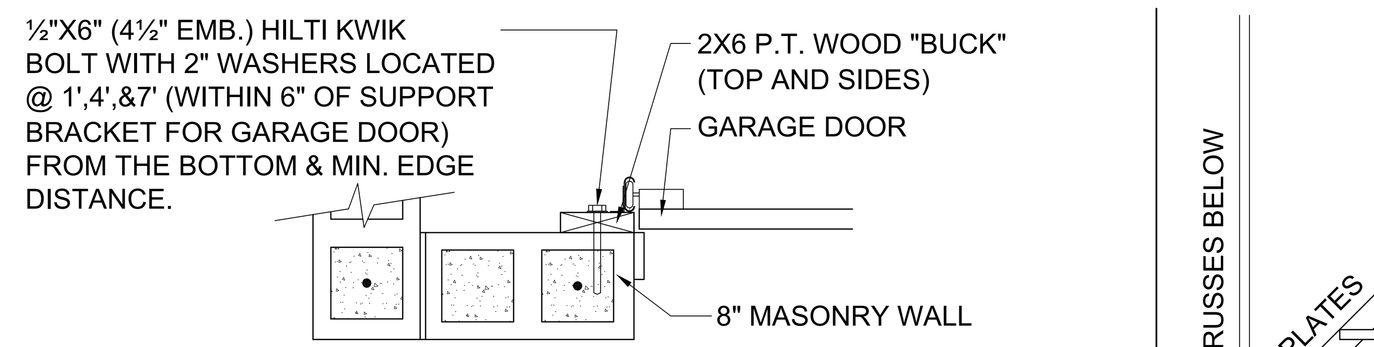

- DETAIL TO SATISFY 150 MPH WIND LOAD
- MASONRY FRAME SHALL BE MIN 8X16 ASTM C-9D
- GROUT FILLED CELL W/½" ASTM 2 #5 REBAR (GRADE 60) @ EA. SIDE OF GARAGE DOOR OPENING
- MAX. DISTANCE TO CORNER OF C.B.S. WALL REINF. 48"
- REINF. TO BE CONT. FROM FTG. TO TIE BEAM W/ ALL "ACI" DETAILS & DEVELOPMENT LENGTHS ADHERED TO
- GARAGE DOOR MANUF. TO PROVIDE ATTACHMENT TO "BUCK"

1.) THE GARAGE DOOR ASSEMBLY SHALL BE DESIGNED FOR POSITIVE AND NEGATIVE WIND PRESSURES OF 25 PSF IN ACCORDANCE WITH SECTION R301 OF THE FLORIDA RESIDENTIAL CODE CERTIFICATION SHALL BE SUBMITTED FROM THE GARAGE DOOR MANUFACTURER TO THE BUILDING DEPARTMENT FOR THE FOLLOWING ITEMS:
   A.) THE DESIGN OF THE DOOR CAN WITHSTAND POSITIVE AND NEGATIVE WIND PRESSURES OF 25 PSF.
   B.) THE DESIGN OF THE DOOR COMPLIES WITH THE CRITERIA SPECIFIED IN SECTION R609 OF THE 2020 FLORIDA BUILDING CODE RESIDENTIAL, 7TH EDITION
   C.) DOOR SIZE, TYPE AND GLAZING
   D.) TRACK SIZE AND FASTENER DETAILS.
   E.) TRACK BRACKET QUANTITY, SPACING AND FASTENER DETAILS.
   F.) REINFORCING MEMBER QUANTITY, LOCATION, SIZE, TYPE AND FASTENER DETAILS. (IF REQUIRED)

GARAGE BUCK DETAIL
1"= 1'-0"

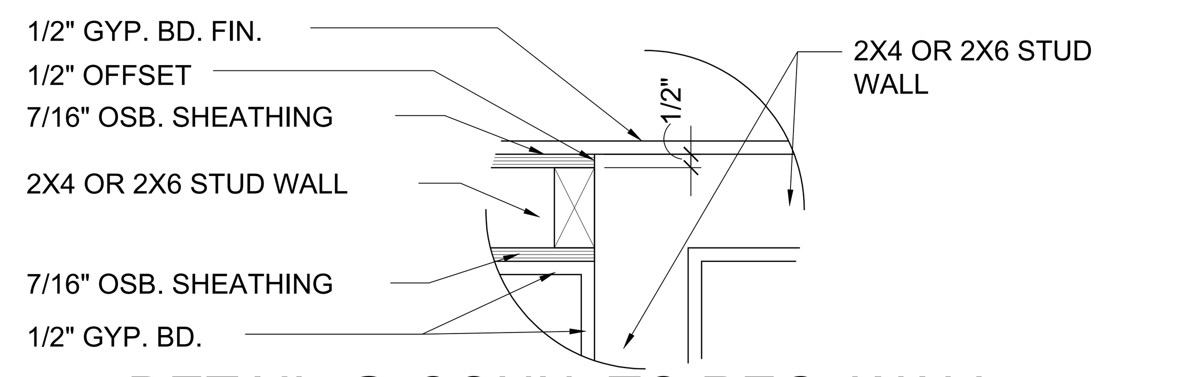

7A D1 DETAIL @ CONN. TO REG. WALL
1"= 1'-0"

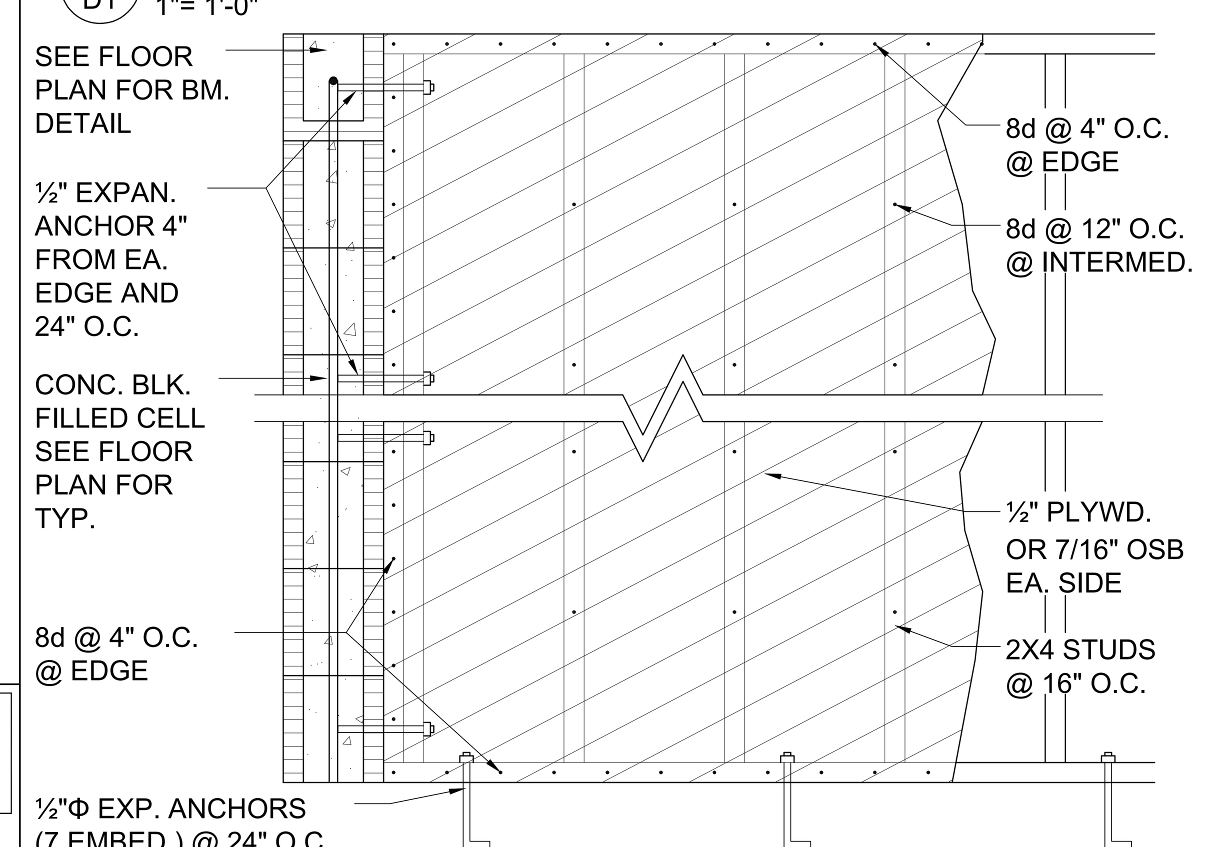

7 D1 SHEAR WALL DETAIL USE ONLY WHEN NOTED AS SHEAR WALL ON PLANS
1/2"= 1'-0"

MIN. WALL AND HEADER REQUIREMENTS

UNSUPPORTED WALL HEIGHT	STUD SPACING	MAXIMUM HEADER SPAN (ft.) 3'	6'	9'	12'	15'	18'
		NUMBER OF HEADER STUDS SUPPORTING END OF HEADER					
		1	1	2	2	2	2
		NUMBER OF FULL-LENGTH STUDS @ EACH END OF HEADER					
10' OR LESS		2	2	3	3	3	3
GREATER THAN 10'		2	2	3	4	5	5

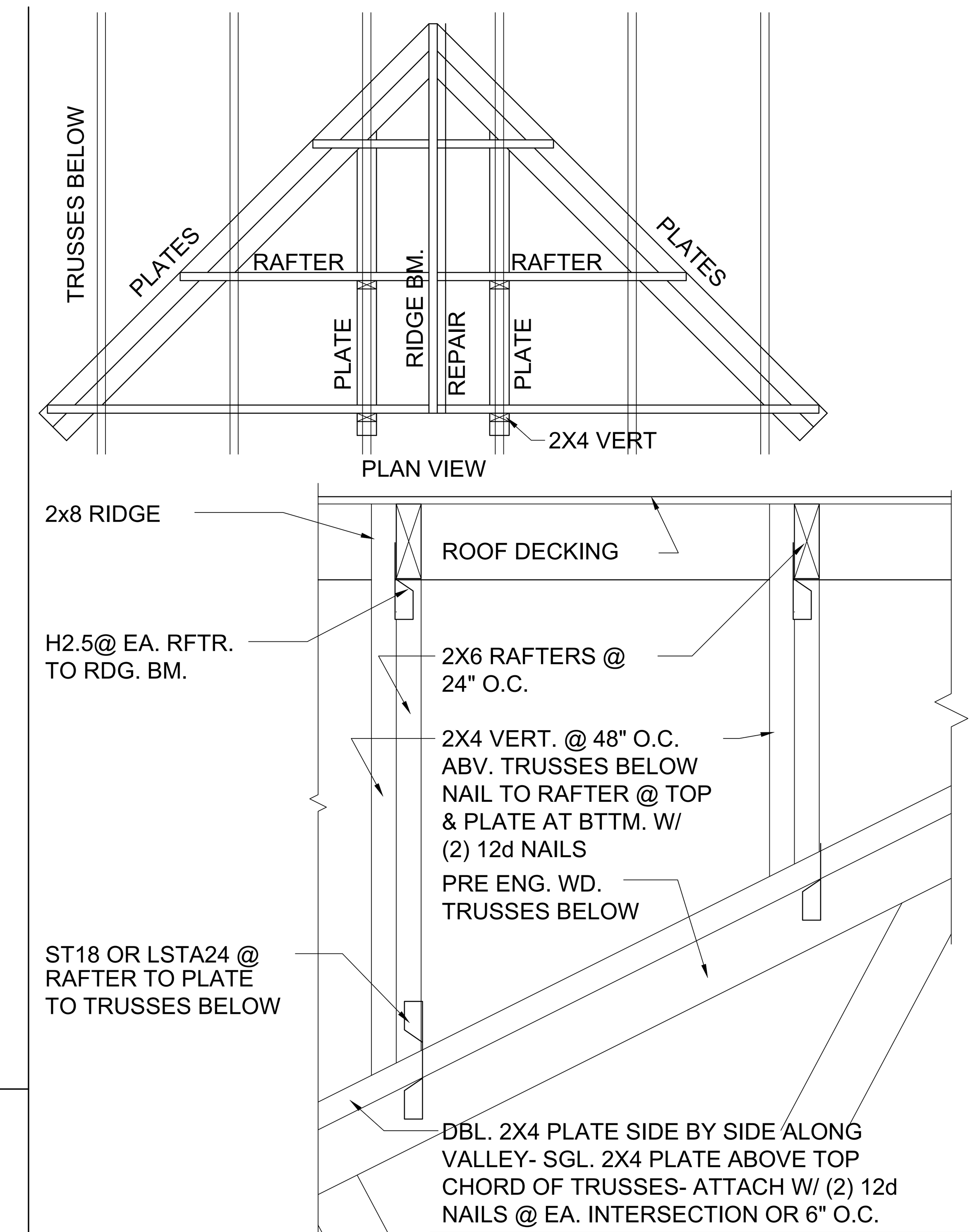

8 D1 VALLEY DETAIL
-3/4" = 1'-0"

NOTE:
IF RIDGE BEAM IS UNDERSIZED-CUT 1 1/2" FROM END OF RAFTERS ON ONE SIDE AND ADD 2X8 NEXT TO FIRST ONE W/12d'S @ 6" O.C.

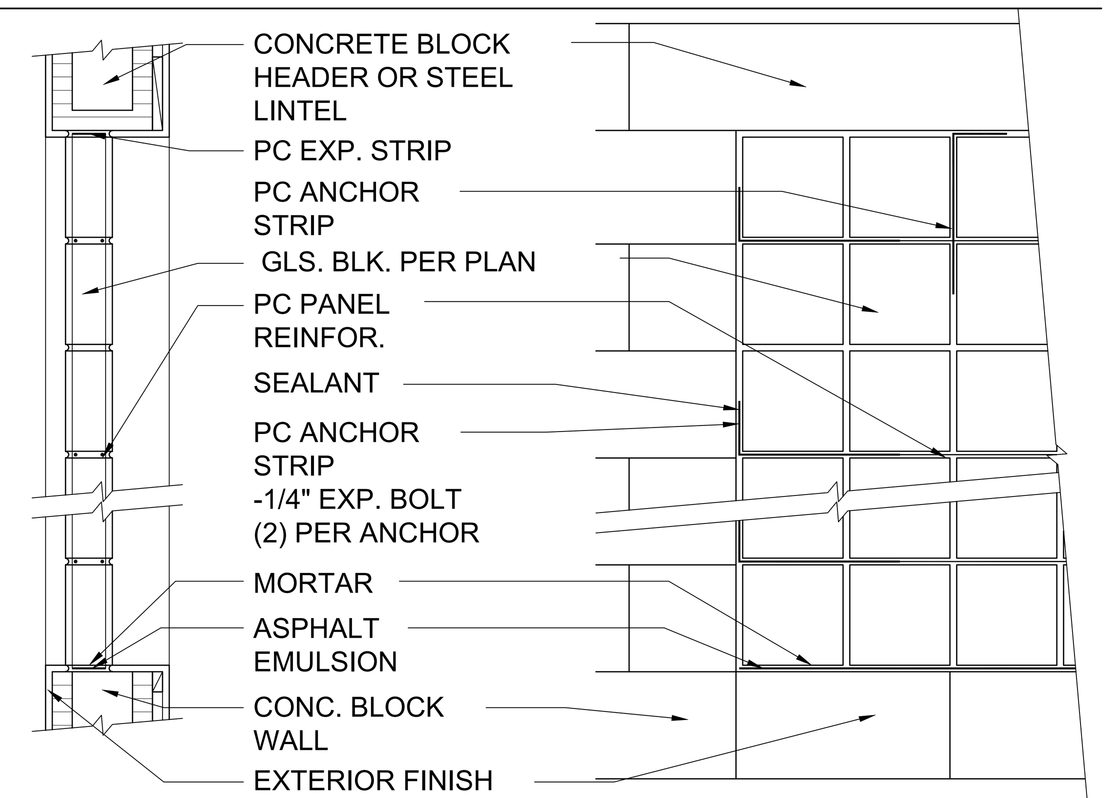

PANEL ANCHOR CONSTRUCTION

PC PANEL REINFORCING (TOP):
USED IN PANELS OVER 25"S.F. IN AREA,IS EMBEDDED HORIZONTALLY IN THE MORTAR JOINTS BETWEEN EVERY OTHER COURSE. PANEL REINFORCING IS FORMED OF TWO PARALLEL WIRES, EITHER 1-5/8" O.C. (FOR USE WITH "THINLINE" SERIES GLS. BLK.) OR 2" O.C. (FOR USE W/ "PREMIERE" SERIES GLS. BLK.), W/ BUTT WELDED CROSSWIRES AT REGULAR INTERVALS. 4' AND 10' LENGTHS AVAILABLE.

PC PANEL ANCHORS (MIDDLE):
ARE USED TO TIE PITTSBURGH CORNING GLASS BLOCK PANELS INTO THE SURROUNDING FRAMEWORK WHEN CHANNELS ARE NOT USED. FORMED FROM 20 GAUGE PERFORATED- THEN GALVANIZED STEEL STRIPS, PANEL ANCHORS ARE AVAIL. IN 1-3/4" WIDTHS X 24" LENGTHS.

PC EXPANSION STRIPS (BOTTOM):
MADE OF WHITE POLYETHYLENE, ARE INSERTED AT THE HEAD AND THE STRIPS REPLACE MORTAR AT THESE POINTS TO CUSHION THE GLASS BLOCK AND ALLOW THE PANEL TO EXPAND & CONTRACT FREELY. FOR METAL CHANNEL OR MASONRY CHASE CONSTRUCTION, PC EXPANSION STRIPS ARE AVAILABLE 3/8" THICK X 4" WIDE X 24" LONG. FOR PANEL ANCHOR CONSTRUCTION, STD. 4" WIDE STRIPS ARE EASILY CUT TO 3" WIDTH, FOR 3-7/8" "PREMIERE" SERIES BLK., AND TO 2-1/4" WIDTH, FOR 3-1/8" "THINLINE" SERIES BLOCK.

6 D1 GLASS BLOCK DETAIL

FIND US ON FACEBOOK & HOUZZ AT MJS CUSTOM HOME DESIGNS

TEG THOMPSON ENGINEERING GROUP, INC.
4401 Vineland Road Suite A6 Orlando, FL. 32811
Ph: (407) 734-1450
Fax: (407) 734-1790
www.tegfl.com

815 Orienta Ave., Suite #1040
Altamonte Springs, Fl. 32701
Ph: (407) 629-6711
Fax: (407) 629-6776
www.mjsdesignersgroup.com
COPYRIGHT NOTICE: THESE PLANS, DESIGNS, AND IDEAS ARE THE EXCLUSIVE INTELLECTUAL PROPERTY OF MJS, INC. ALL RIGHTS RESERVED.
MJS designers group
residential·commercial·architecture

6-Unit: Rear Load Detached
Models: Tyler, Jackson, Grant, Jackson, Grant & Monroe
Building Pad #XX
Lot# XX-XX, Subdivision
Street Address
City, State. Zip Code

A division of Park Square Enterprises Inc.
5200 Vineland Rd. Suite #200
Orlando, Fl. 32811
Phone: (407) 529-3000
Park Square HOMES

Carlos V:\Park Square Homes\MODELS\TOWNHOME MODELS\Townhomes (Orlando)\1- Townhome Models\Rear Load Detached Towns (Raised Heel)\6-Unit\SD1 Structural Details.dwg
Oct 17, 2022,10:30am

ISSUE DATE	10/17/2022
REVISIONS	
PROJECT:	22-1148
SCALE:	AS NOTED
DRAWN BY:	M.C.
DESIGNED BY:	MJS

STRUCTURAL NOTES & DETAILS
SD1

© COPYRIGHT 2016 PARK SQUARE HOMES HEREBY RESERVES ITS COMMON LAW COPYRIGHTS IN THESE PLANS, IDEAS AND DESIGN. THESE PLANS, IDEAS AND DESIGNS ARE NOT TO BE COPIED OR MODIFIED IN ANY MATTER OR FORM WHATSOEVER, NOR ARE THEY TO BE ASSIGNED TO ANY THIRD PARTY WITHOUT FIRST OBTAINING THE EXPRESS WRITTEN PERMISSION FROM PARK SQUARE HOMES.

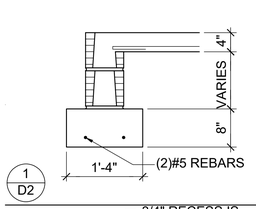

1 / D2

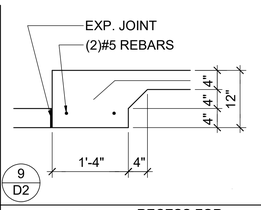

9 / D2

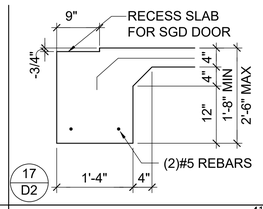

17 / D2

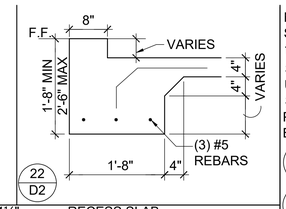

22 / D2

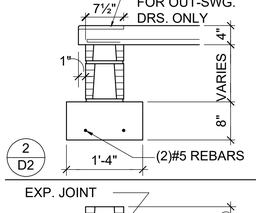

2 / D2

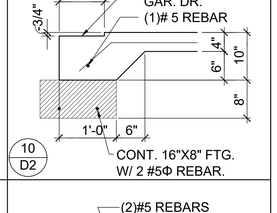

10 / D2

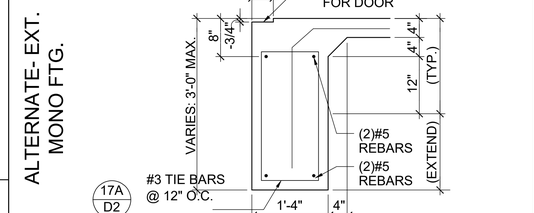

17A / D2

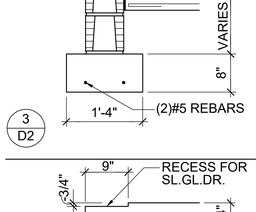

3 / D2

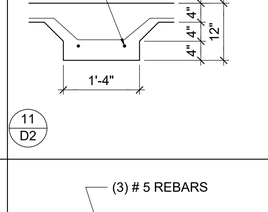

11 / D2

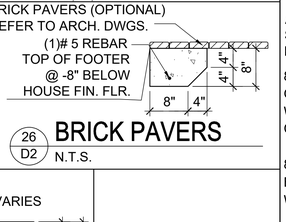

18 / D2

26 / D2 BRICK PAVERS N.T.S.

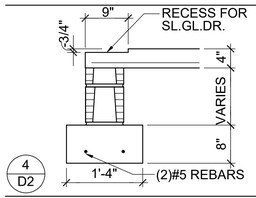

4 / D2

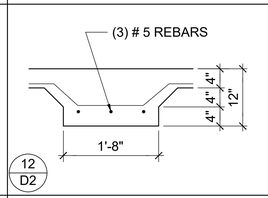

12 / D2

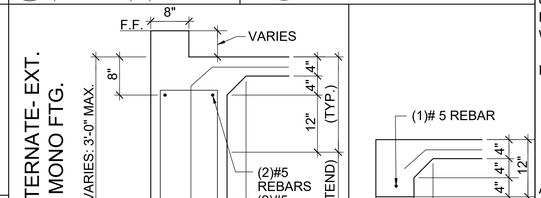

18A / D2

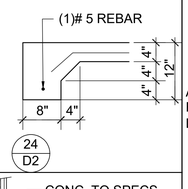

24 / D2

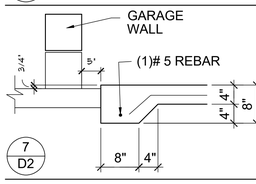

7 / D2

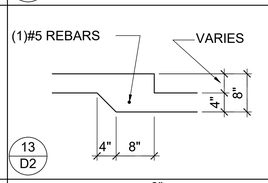

13 / D2

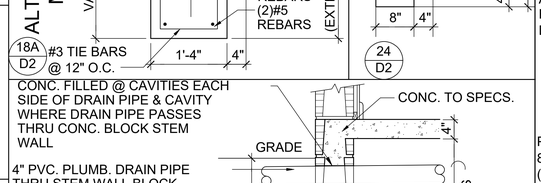

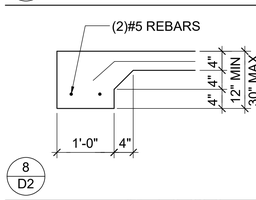

8 / D2

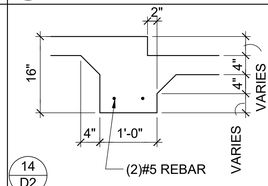

14 / D2

P1 / D2 PIPE THRU FOOTING DETAIL — MONOLITHIC 3/8"= 1'-0"

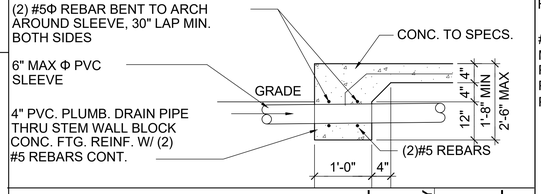

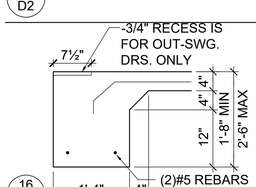

16 / D2

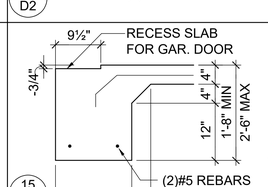

15 / D2

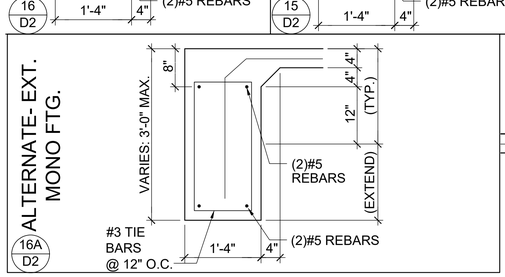

16A / D2

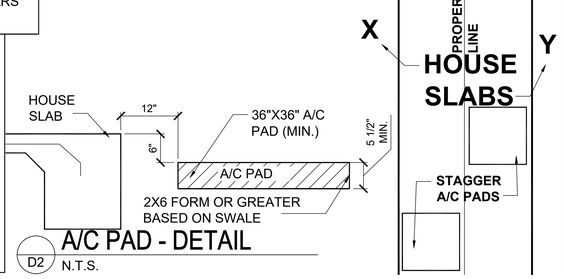

D2 A/C PAD - DETAIL N.T.S.

NOTE: THE ATTACHMENT OF ASPHALT SHINGLES, UNLESS OTHERWISE NOTED, SHALL CONFORM TO ASTM D 3161 (MODIFIED TO 150 MPH) OR M-DC PA 107-95. THE FRC REQUIRES BASE AND CAP FLASHING.

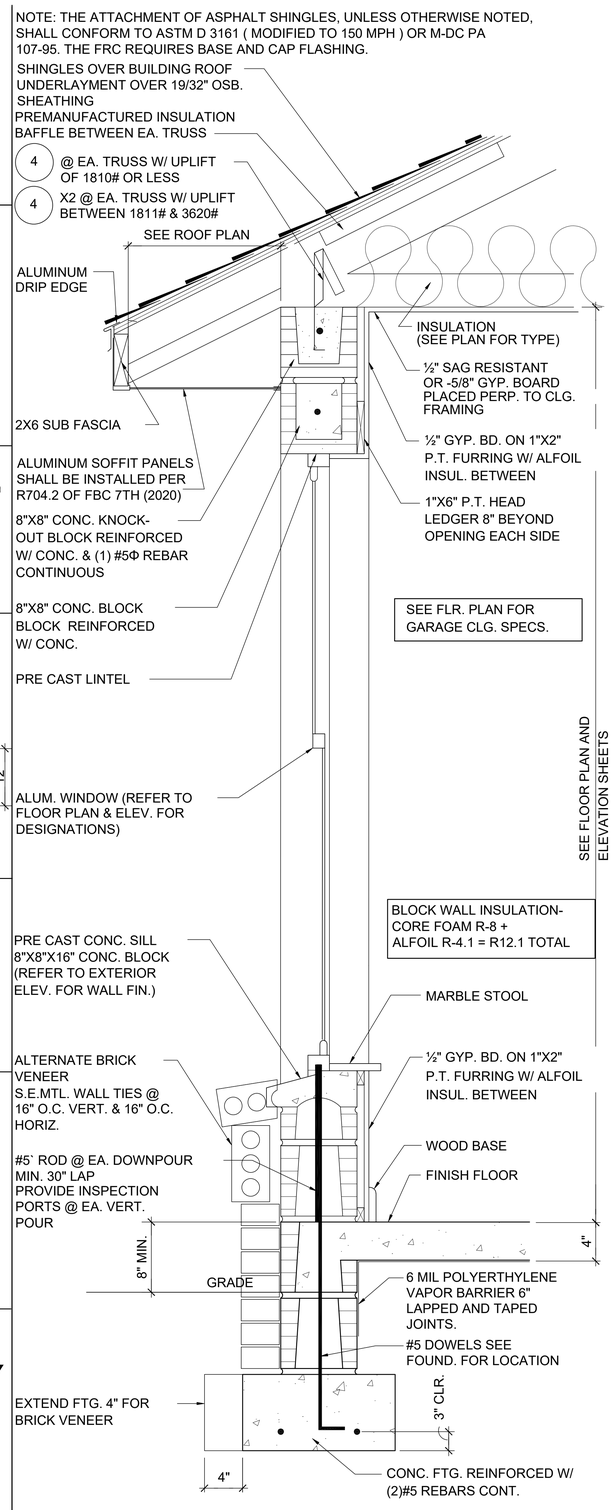

A / D2 TYPICAL WALL SECTION W/ STEM WALL FOOTING 3/4"= 1'-0"

NOTE: THE ATTACHMENT OF ASPHALT SHINGLES, UNLESS OTHERWISE NOTED, SHALL CONFORM TO ASTM D 3161 (MODIFIED TO 150 MPH) OR M-DC PA 107-95. THE FRC REQUIRES BASE AND CAP FLASHING.

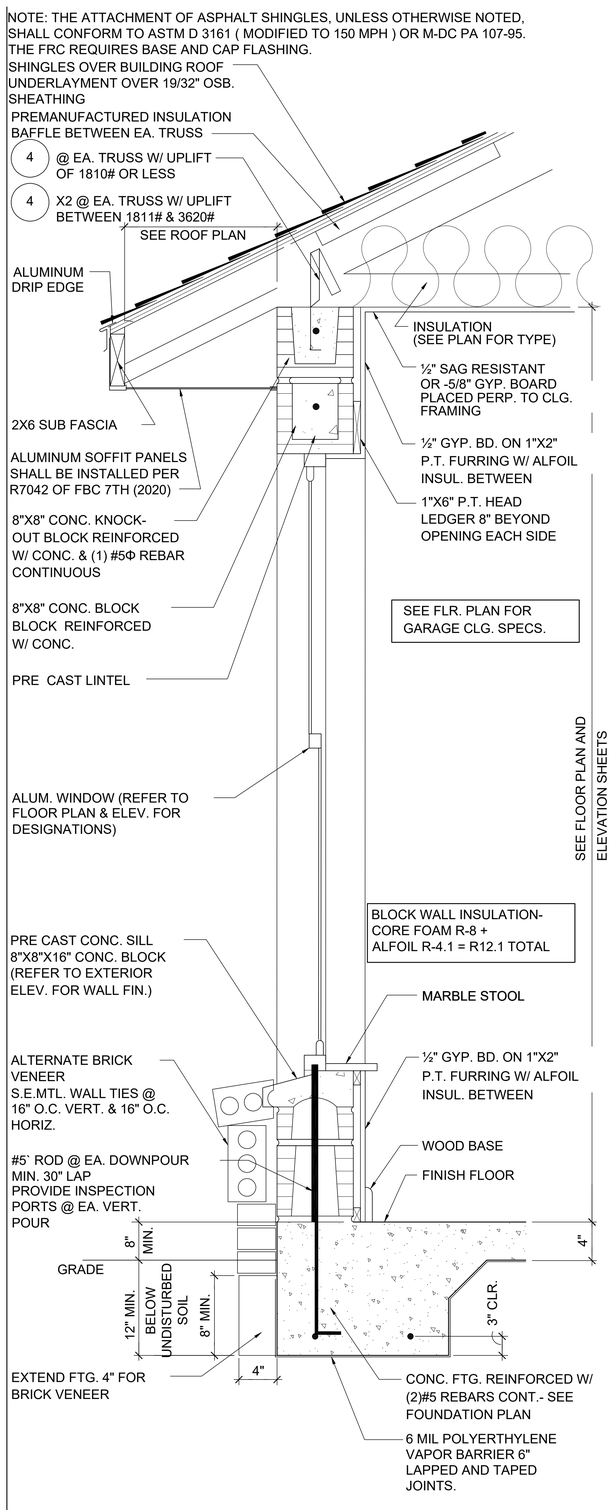

A / D2 TYPICAL WALL SECTION W/ MONOLITHIC FOOTING 3/4"= 1'-0"

THOMPSON ENGINEERING GROUP, INC.
4401 Vineland Road Suite A9 Orlando, FL 32811
Phone: (407) 774-4440
Fax: (407) 734-1790
www.tegfl.com

MJS designers group
815 Orienta Ave., Suite #1040
Altamonte Springs, Fl. 32701
Ph: (407) 629-6711
Fax: (407) 629-6776
www.mjsdesignersgroup.com
residential-commercial-architecture

COPYRIGHT NOTICE: THESE PLANS, DESIGNS, AND IDEAS ARE THE EXCLUSIVE INTELLECTUAL PROPERTY OF MJS, INC. ALL RIGHTS RESERVED.

AIBD

GOBA GREATER ORLANDO BUILDERS ASSOCIATION

6-Unit: Rear Load Detached

Models: Tyler, Jackson, Grant, Jackson, Grant & Monroe

Building Pad #XX
Lot# XX-XX, Subdivision
Street Address
City, State: Zip Code

A division of Park Square Enterprises Inc.
5200 Vineland Rd. Suite #200
Orlando, Fl. 32811
Phone: (407) 529-3000

Park Square HOMES

ISSUE DATE	10/17/2022
REVISIONS	
PROJECT:	22-1148
SCALE:	AS NOTED
DRAWN BY:	M.C.
DESIGNED BY:	M.JS

STRUCTURAL DETAILS
SD2

Oct 17, 2022, 10:30am Carlos V:\Park Square Homes\MODELS\TOWNHOME MODELS\Townhomes (Orlando)\1- Townhome Models\Rear Load Detached Towns (Raised Heel)\6-Unit\SD2 Structural Details.dwg

houzz FIND US ON FACEBOOK & HOUZZ AT MJS CUSTOM HOME DESIGNS

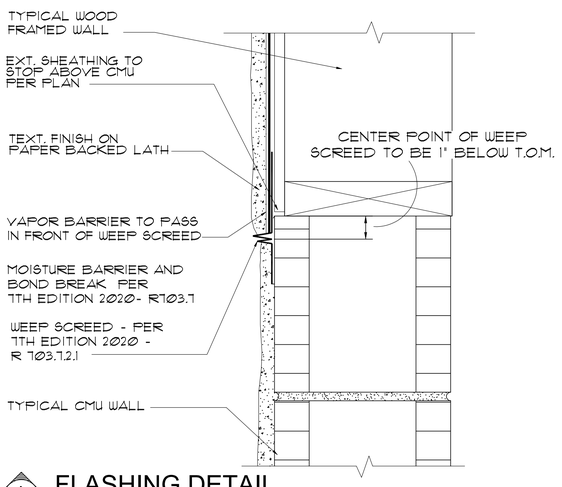

A D3 FLASHING DETAIL

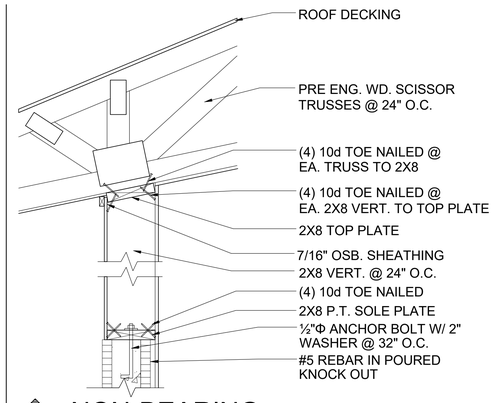

G-6 D3 NON-BEARING

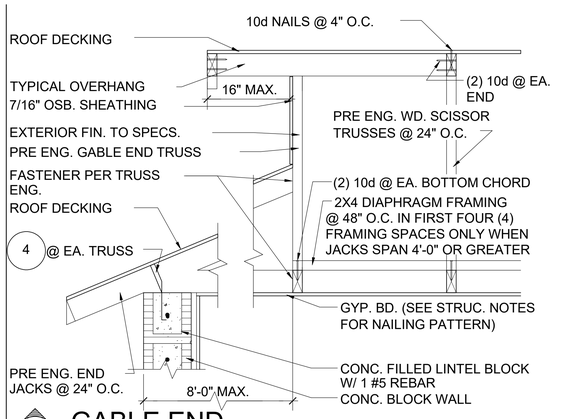

G-3 D3 GABLE END

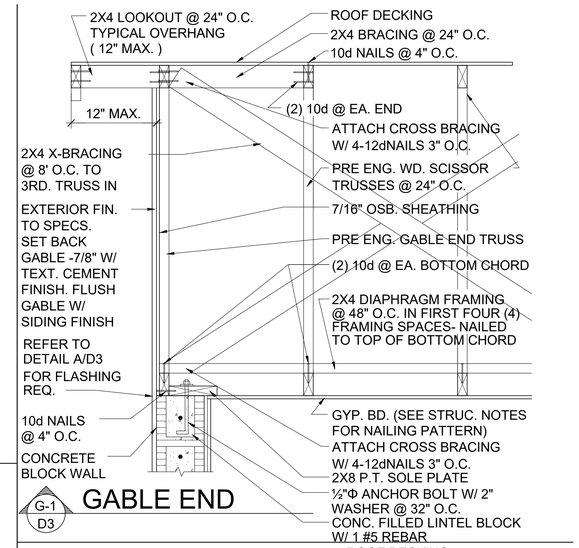

G-1 D3 GABLE END

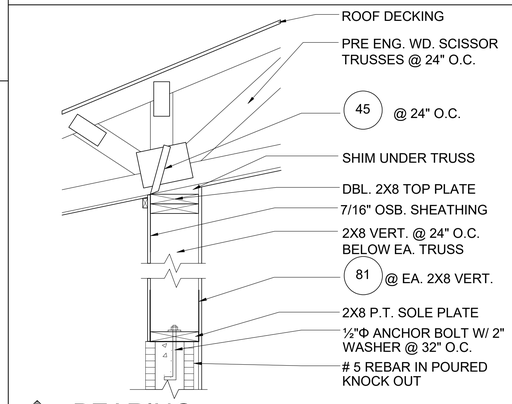

G-7 D3 BEARING

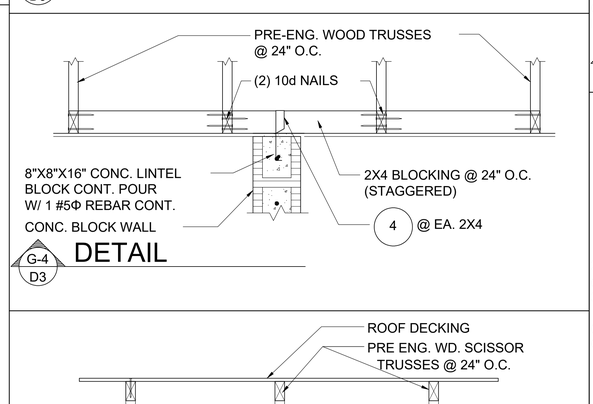

G-4 D3 DETAIL

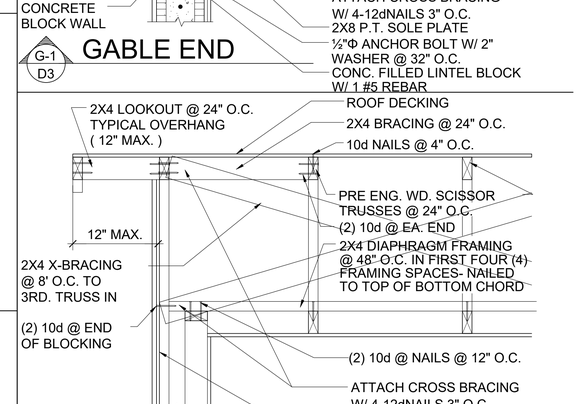

G-2F D3 GABLE END

G-5 D3 GABLE END

G-2 D3

TOLERANCES: ALL DIMENSION TO BE HELD WITHIN +- 1/4"

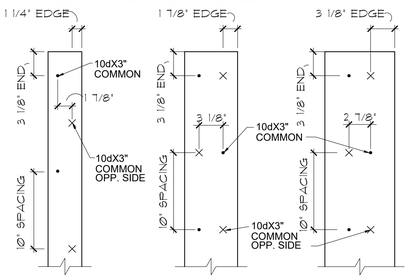

B 2X BUILT-UP STUD COLUMN DETAILS

1?" = 1'-0"

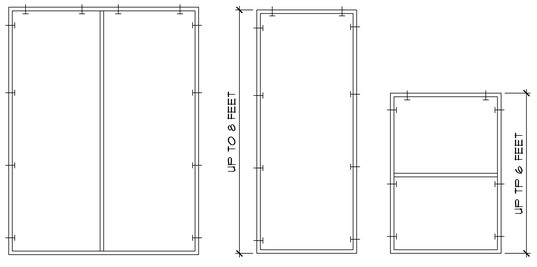

FOR MULTIPLE WINDOWS AND DOORS USE 2 TAPCONS PER WINDOW AT THE HEAD AND 4 TAPCONS AT THE JAMB.

BUCK ATTACHMENT DATA

BUCKS SHALL BE 1x4 OR 2x8 PT AT WINDOWS OR 2x8 PT AT DOORS IN PINE OR SPRUCE. AT WINDOWS ATTACH BUCKS TO BLOCK WITH COMMON T-NAILS AND PLACEMENT SIMILAR TO TAPCONS SHOWN. AT DOORS OR FIN WINDOWS IN BLOCK, ATTACH BUCKS w/ 2 T-NAILS TOP AND BOTTOM AND 8" O.C. STAGGERED IN THE FIELD.

USE MIN. 2-1/4" T-NAILS w/ 1x BUCK. USE MIN. -1/4" x 3" TAPCONS w/ 2x BUCK. START ALL END TAPCONS WITHIN 6" OF CORNERS AND 30" ON CENTER MAXIMUM.

NOTE

IN CASE OF BLOCK OPENINGS LARGER THAN DOOR FRAMING: ATTACH ADDITIONAL 2X FRAMING TO THE BLOCK WALL USING 1/4" x 4" TAPCONS AT 3" FROM END AND 12" O.C. IN THE CENTER. ATTACH TOP FRAMING TO HEADER USING 1/4"x1-3/4" TAPCONS W/ (1) 6" FROM END TO END AND 12" O.C. IN THE. CENTER.

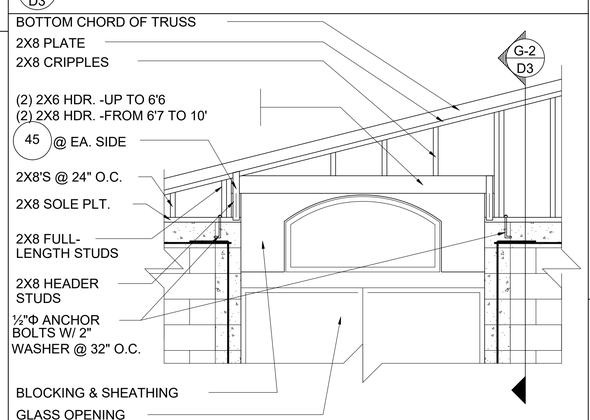

B D3 GABLE END

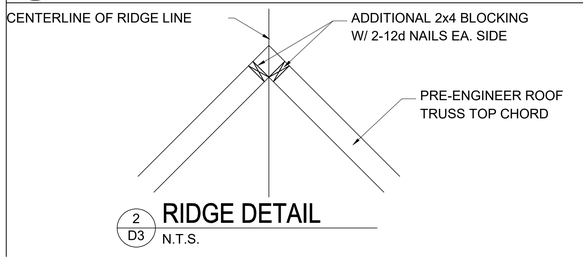

2 D3 RIDGE DETAIL N.T.S.

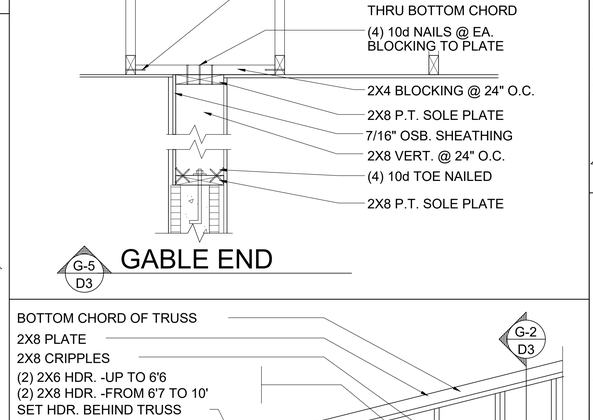

CB D3 DETAIL N.T.S.

© COPYRIGHT 2016 PARK SQUARE HOMES HEREBY RESERVES ITS COMMON LAW COPYRIGHTS IN THESE PLANS, IDEAS AND DESIGN. THESE PLANS, IDEAS AND DESIGNS ARE NOT TO BE COPIED OR MODIFIED IN ANY MATTER OR FORM WHATSOEVER, NOR ARE THEY TO BE ASSIGNED TO ANY THIRD PARTY WITHOUT FIRST OBTAINING THE EXPRESS WRITTEN PERMISSION FROM PARK SQUARE HOMES.

FIND US ON FACEBOOK & HOUZZ AT MJS CUSTOM HOME DESIGNS

THOMPSON ENGINEERING GROUP, INC.
Mark E. Thompson, P.E.
2401 Vineland Road Suite A9 Orlando, FL. 32811
Phone (407) 734-1790
Fax: (407) 734-1790
www.tegfl.com

815 Orienta Ave., Suite #1040
Altamonte Springs, Fl. 32701
Ph: (407) 629-6711
Fax: (407) 629-6776
www.mjsdesignersgroup.com
COPYRIGHT NOTICE: THESE PLANS, DESIGNS, AND IDEAS ARE THE EXCLUSIVE INTELLECTUAL PROPERTY OF MJS, INC. ALL RIGHTS RESERVED.

MJS designers group
residential-commercial-architecture

AIBD

GOBA GREATER ORLANDO BUILDERS ASSOCIATION

6-Unit: Rear Load Detached

Models: Tyler, Jackson, Grant, Jackson, Grant & Monroe

Building Pad #:XX
Lot# XX-XX, Subdivision
Street Address
City, State: Zip Code

A division of Park Square Enterprises Inc.
5200 Vineland Rd. Suite #200
Orlando, Fl. 32811
Phone: (407) 529-3000

Park Square HOMES

ISSUE DATE	10/17/2022
REVISIONS	
PROJECT:	22-1148
SCALE:	AS NOTED
DRAWN BY:	M.C.
DESIGNED BY:	MJS

STRUCTURAL DETAILS
SD3

Oct 17, 2022, 10:30am Carlos V:\Park Square Homes\MODELS\TOWNHOME MODELS\Townhomes (Orlando)\1- Townhome Models\Rear Load Detached Towns (Raised Heel)\6-Unit\SD3 Structural Details.dwg

© COPYRIGHT 2016 PARK SQUARE HOMES HEREBY RESERVES ITS COMMON LAW COPYRIGHTS IN THESE PLANS, IDEAS AND DESIGN. THESE PLANS, IDEAS AND DESIGNS ARE NOT TO BE COPIED OR MODIFIED IN ANY MATTER OR FORM WHATSOEVER, NOR ARE THEY TO BE ASSIGNED TO ANY THIRD PARTY WITHOUT FIRST OBTAINING THE EXPRESS WRITTEN PERMISSION FROM PARK SQUARE HOMES.

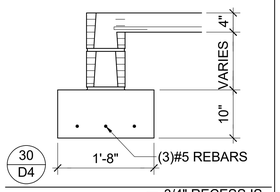

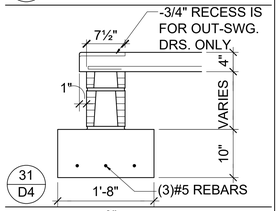

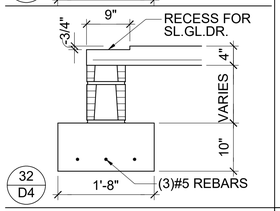

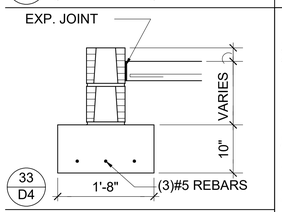

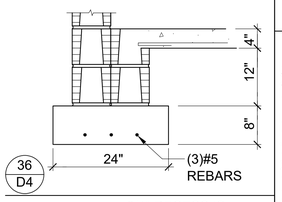

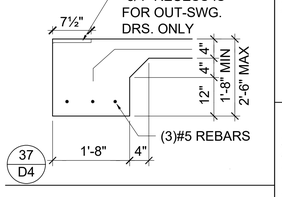

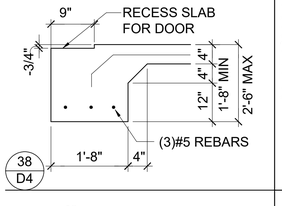

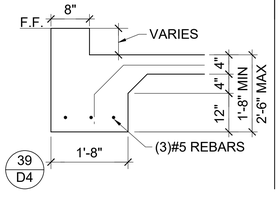

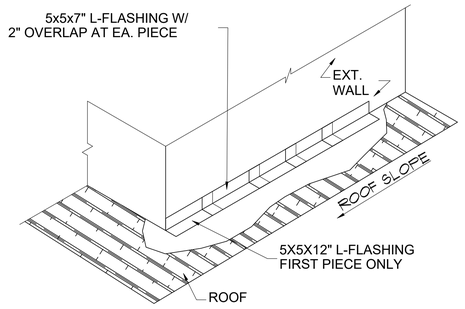

STEP FLASHING DETAIL

N.T.S.

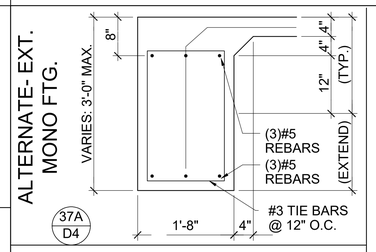

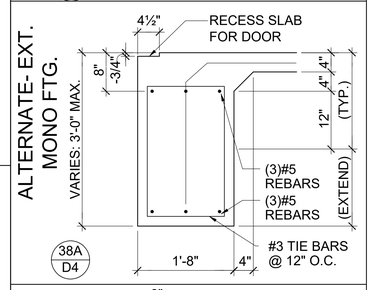

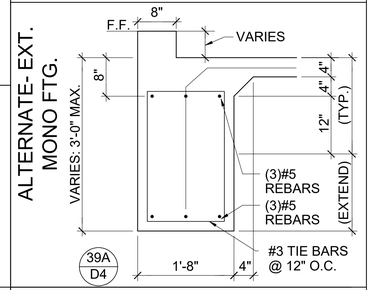

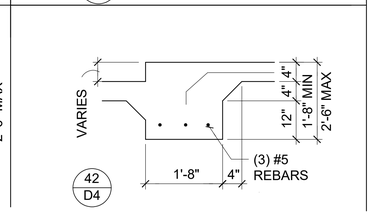

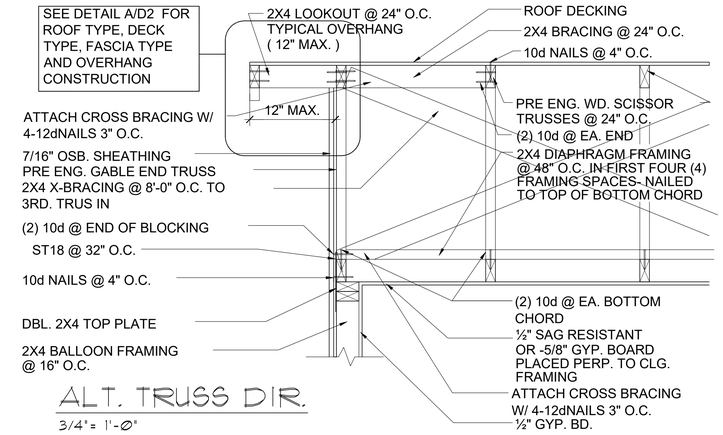

ALT. TRUSS DIR.

3/4"= 1'-0"

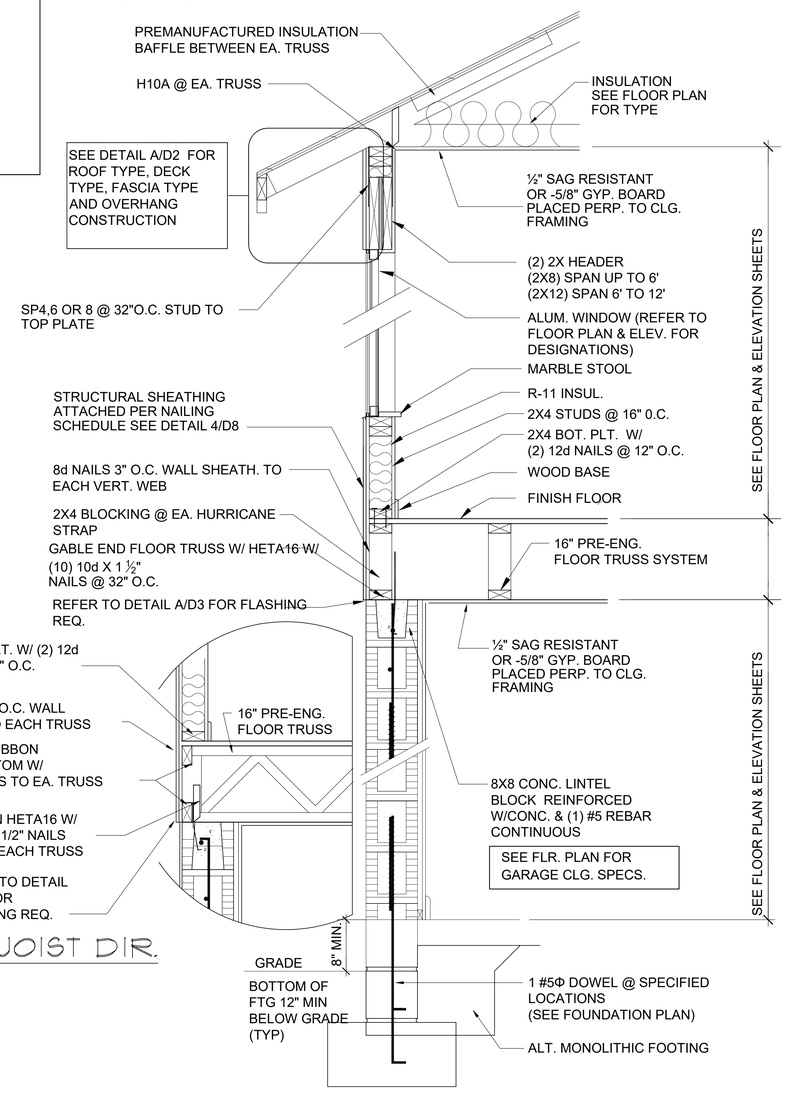

ALT. JOIST DIR.

3/4"= 1'-0"

W2 D4 TYP. WALL SECTION

3/4"= 1'-0"

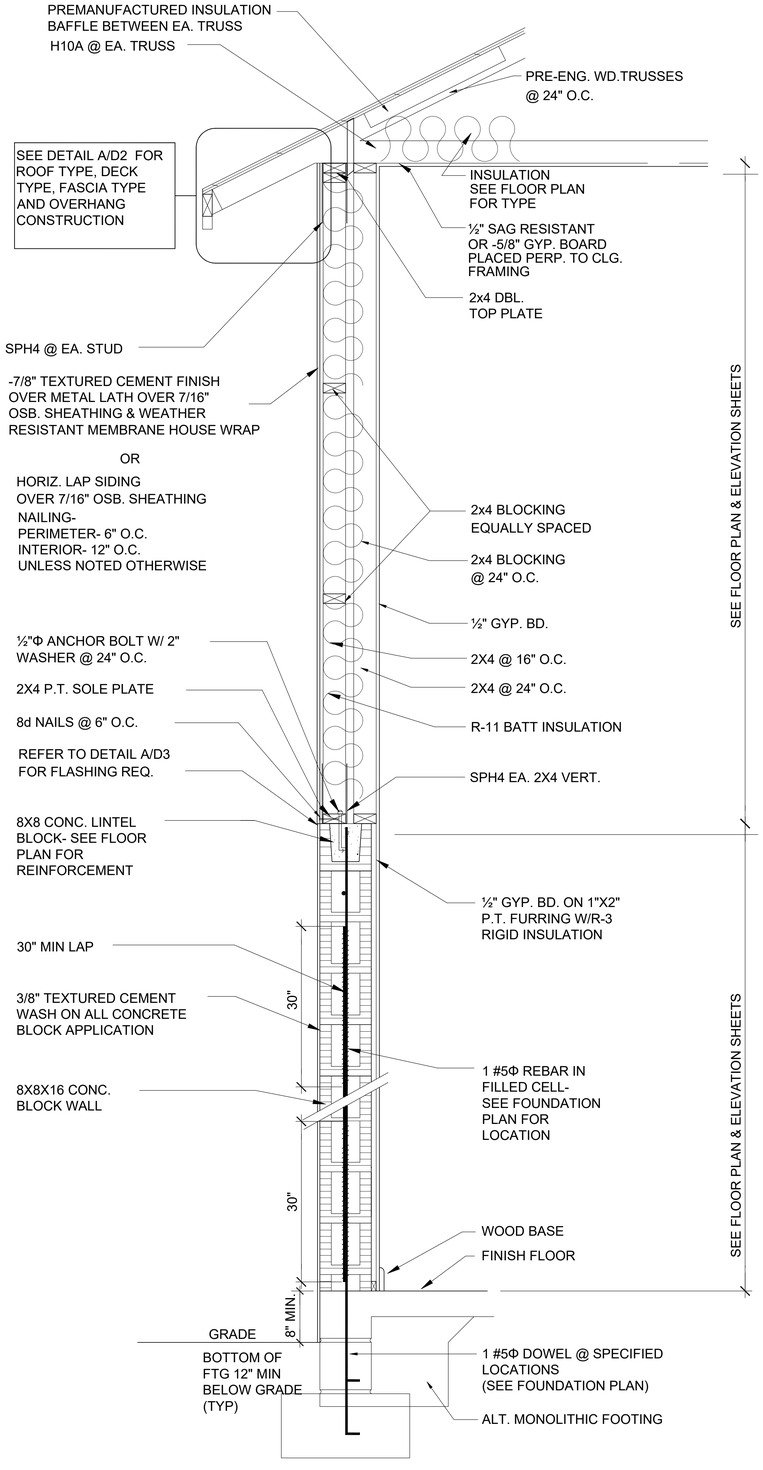

W1 D4 TYP. WALL SECTION

3/4"= 1'-0"

THOMPSON ENGINEERING GROUP, INC.
401 Vineland Road Suite A9 Orlando, FL. 32811
Phone: (407) 734-1640
Fax: (407) 734-1790
www.tegfl.com

815 Orienta Ave., Suite #1040
Altamonte Springs, Fl. 32701
Ph: (407) 629-6711
Fax: (407) 629-6776
www.mjsdesignersgroup.com
designers group
residential+commercial+architecture

COPYRIGHT NOTICE: THESE PLANS, DESIGNS, AND IDEAS ARE THE EXCLUSIVE INTELLECTUAL PROPERTY OF MJS, INC. ALL RIGHTS RESERVED.

AIBD

GOBA GREATER ORLANDO BUILDERS ASSOCIATION

6-Unit; Rear Load Detached

Models: Tyler, Jackson, Grant, Jackson, Grant & Monroe

Building Pad #XX
Lot# XX-XX, Subdivision
Street Address
City, State, Zip Code

A division of Park Square Enterprises Inc.
5200 Vineland Rd. Suite #200
Orlando, Fl. 32811
Phone: (407) 329-3000

Park Square HOMES

ISSUE DATE	10/17/2022
REVISIONS	
PROJECT:	22-1148
SCALE:	AS NOTED
DRAWN BY:	M.C.
DESIGNED BY:	MJS

Oct 17, 2022, 10:38am Carlos V:\Park Square Homes\MODELS\TOWNHOME MODELS\Townhomes (Orlando)\1- Townhome Models\Rear Load Detached Towns (Raised Heel)\6-Unit\SD4 Structural Details.dwg

STRUCTURAL DETAILS
SD4

FIND US ON FACEBOOK & HOUZZ AT MJS CUSTOM HOME DESIGNS

© COPYRIGHT 2016 PARK SQUARE HOMES HEREBY RESERVES ITS COMMON LAW COPYRIGHTS IN THESE PLANS, IDEAS AND DESIGN. THESE PLANS, IDEAS AND DESIGNS ARE NOT TO BE COPIED OR MODIFIED IN ANY MATTER OR FORM WHATSOEVER, NOR ARE THEY TO BE ASSIGNED TO ANY THIRD PARTY WITHOUT FIRST OBTAINING THE EXPRESS WRITTEN PERMISSION FROM PARK SQUARE HOMES.

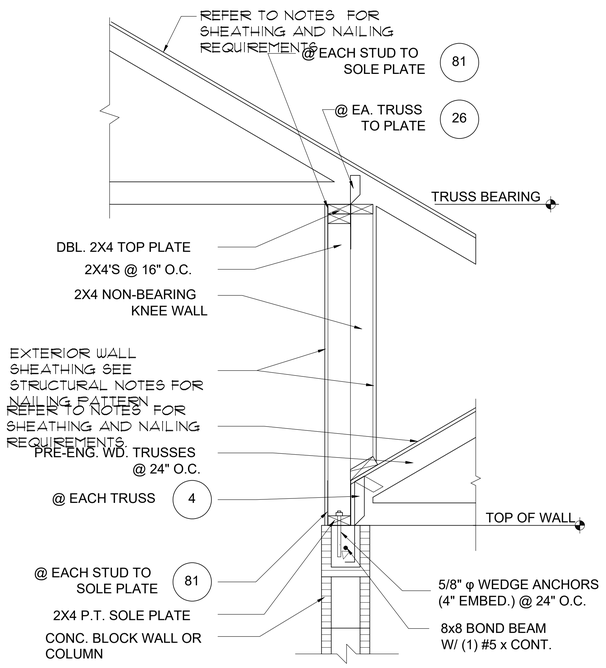

1 D5 DETAIL
1/2"= 1'-0" (11X17) 1"= 1'-0" (22"X34")

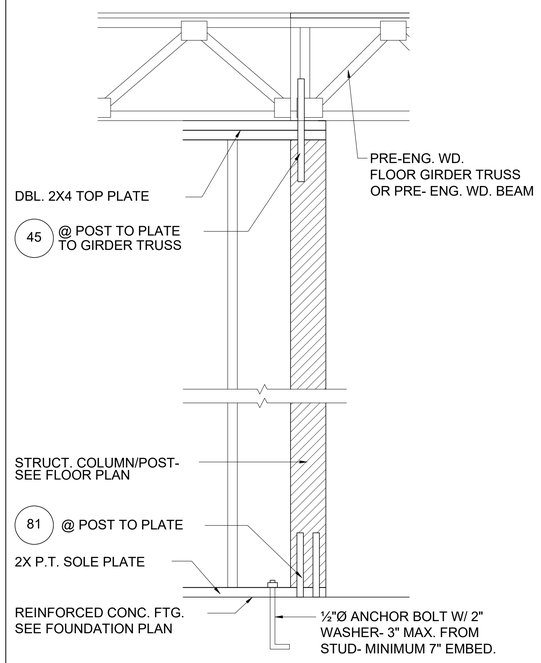

2 D5 DETAIL
1/2"= 1'-0" (11X17) 1"= 1'-0" (22"X34")

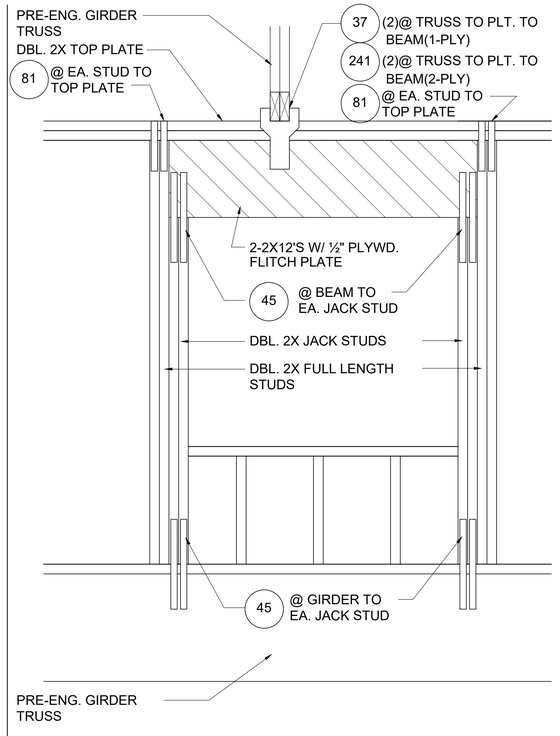

3 D5 DETAIL
1/2"=1'-0" (11X17) 1"=1'-0" (22X34)

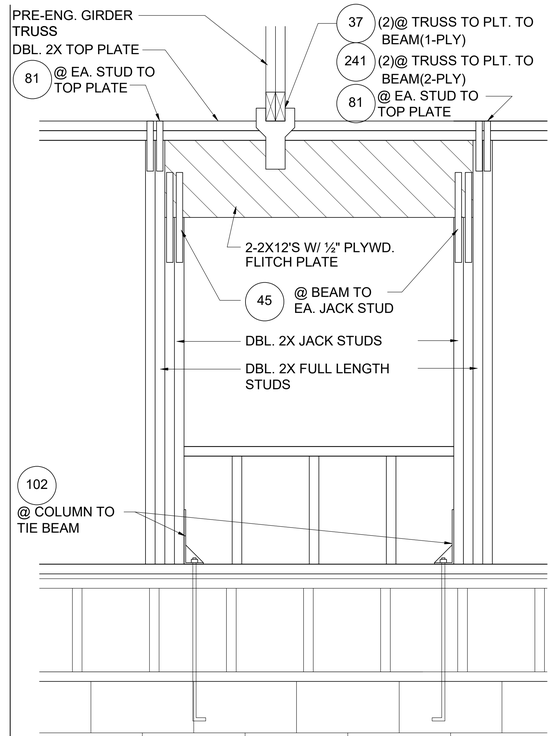

4 D5 DETAIL
1/2"=1'-0" (11X17) 1"=1'-0" (22X34)

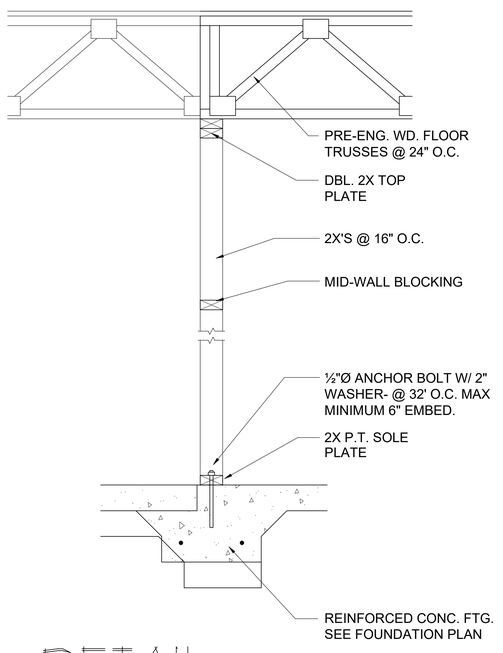

5 D5 DETAIL
1/2"=1'-0" (11X17) 1"=1'-0" (22X34)

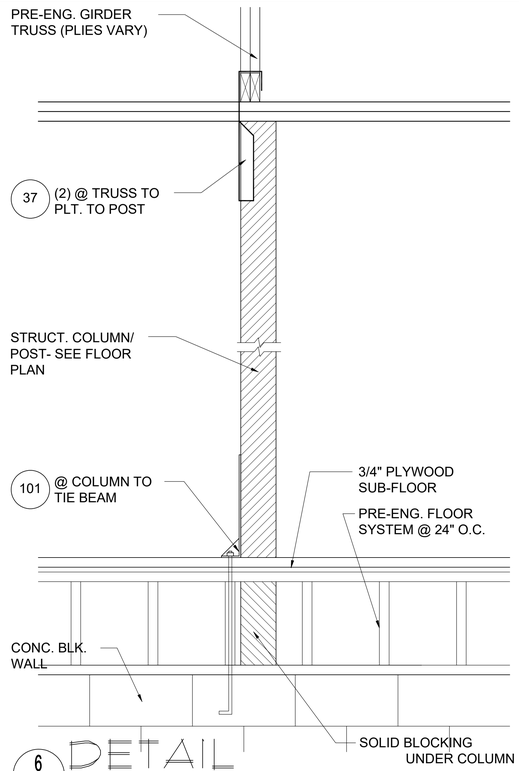

6 D5 DETAIL
1/2"=1'-0" (11X17) 1"=1'-0" (22X34)

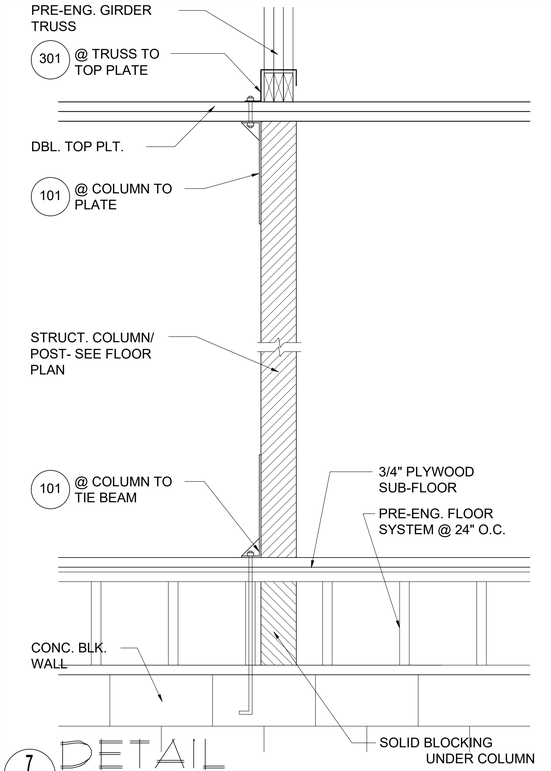

7 D5 DETAIL
1/2"=1'-0" (11X17) 1"=1'-0" (22X34)

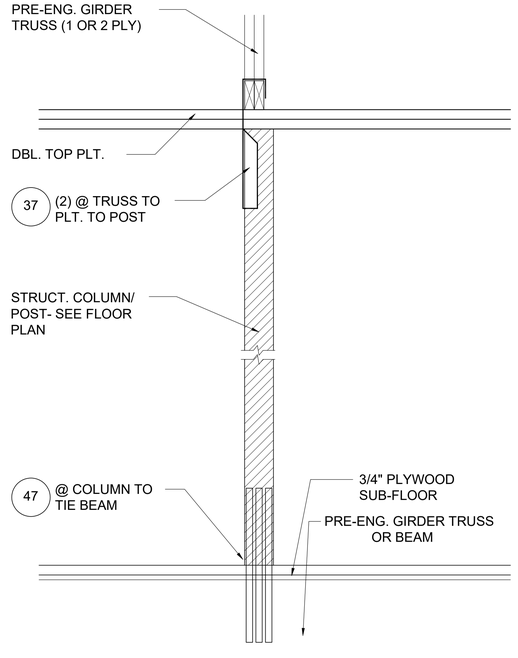

8 D5 DETAIL
1/2"= 1'-0" (11X17) 1"= 1'-0" (22"X34")

STRUCTURAL DETAILS

FIND US ON FACEBOOK & HOUZZ AT MJS CUSTOM HOME DESIGNS

THOMPSON ENGINEERING GROUP, INC.
4401 Vineland Road Suite A9 Orlando, FL 32811
Ph: (407) 794-1460
Fax: (407) 734-1790
www.tegfl.com

815 Orienta Ave., Suite #1040
Altamonte Springs, Fl. 32701
Ph: (407) 629-6711
Fax: (407) 629-6776
www.mjsdesignersgroup.com
COPYRIGHT NOTICE: THESE PLANS, DESIGNS, AND IDEAS ARE THE EXCLUSIVE INTELLECTUAL PROPERTY OF MJS, INC. ALL RIGHTS RESERVED.

MJS designers group
residential-commercial-architecture

AIBD

GOBA GREATER ORLANDO BUILDERS ASSOCIATION

6-Unit: Rear Load Detached

Models: Tyler, Jackson, Grant, Jackson, Grant & Monroe

Building Pad #XX
Lot# XX-XX, Subdivision
Street Address
City, State, Zip Code

A division of Park Square Enterprises Inc.
5200 Vineland Rd. Suite #200
Orlando, Fl. 32811
Phone: (407) 529-3000

Park Square HOMES

ISSUE DATE	10/17/2022
REVISIONS	
PROJECT:	22-1148
SCALE:	AS NOTED
DRAWN BY:	M.C.
DESIGNED BY:	MJS

Oct 17, 2022, 10:30am Carlos V:\Park Square Homes\MODELS\TOWNHOME MODELS\Townhomes (Orlando)\1-Townhome Models\Rear Load Detached Towns (Raised Heel)\6-Unit\SD5 Structural Details.dwg

SD5

© COPYRIGHT 2016 PARK SQUARE HOMES HEREBY RESERVES ITS COMMON LAW COPYRIGHTS IN THESE PLANS, IDEAS AND DESIGN. THESE PLANS, IDEAS AND DESIGNS ARE NOT TO BE COPIED OR MODIFIED IN ANY MATTER OR FORM WHATSOEVER, NOR ARE THEY TO BE ASSIGNED TO ANY THIRD PARTY WITHOUT FIRST OBTAINING THE EXPRESS WRITTEN PERMISSION FROM PARK SQUARE HOMES.

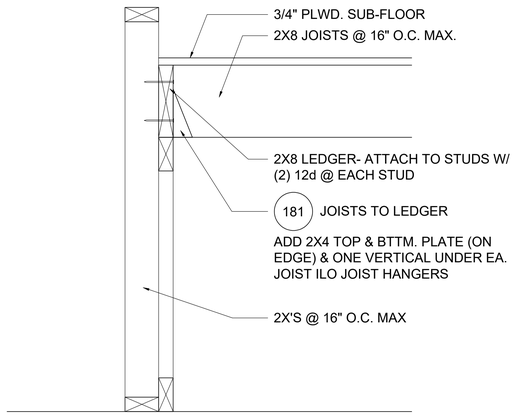

1 D6 TYP. STAIR CONNECT.
3/4"= 1'-0" (11X17) 1½"= 1'-0" (22"X34")

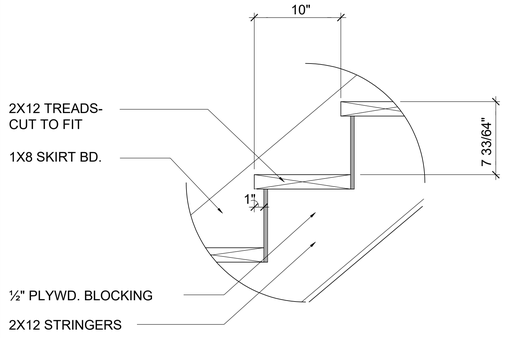

TOTAL RISE: 10'-83/4" (17 RISERS @ 7 33/64" EA.)
TOTAL RUN: 13'-4" (16 TREADS @ 10" EA.)

2 D6 STAIR DETAIL
3/4"= 1'-0" (11X17) 1½"= 1'-0" (22"X34") STAIR DATA

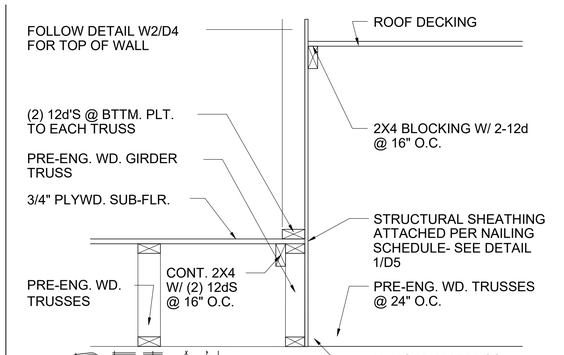

6 D6 DETAIL
1/2"=1'-0" (11X17) 1"=1'-0" (22X34)

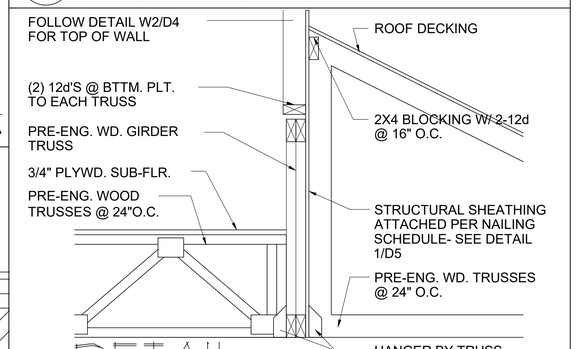

7 D6 DETAIL
1/2"=1'-0" (11X17) 1"=1'-0" (22X34)

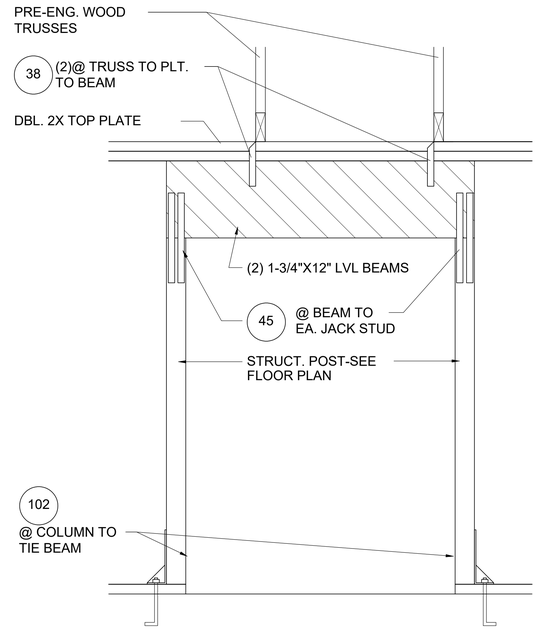

10 D6 DETAIL
1/2"=1'-0" (11X17) 1"=1'-0" (22X34)

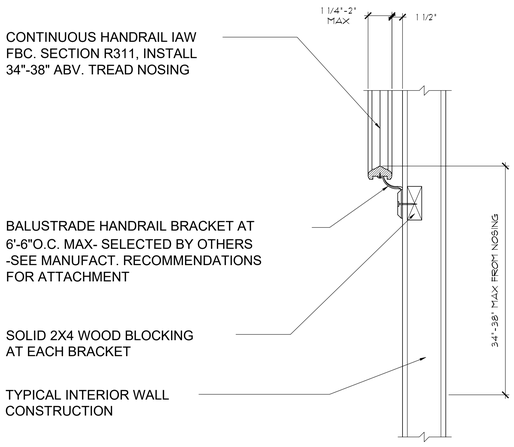

3 D6 TYP. HANDRAIL DET.
3/4"= 1'-0" (11X17) 1½"= 1'-0" (22"X34")

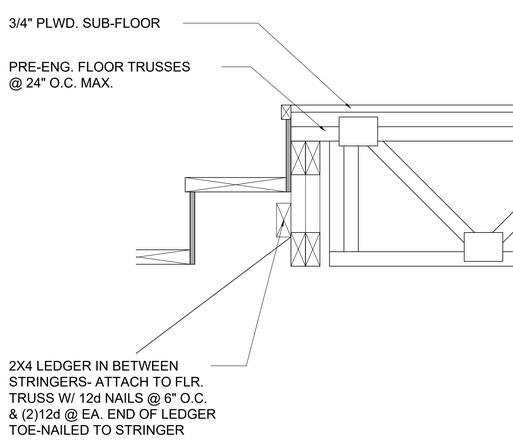

4 D6 TYP. STAIR CONNECT.
3/4"=1'-0" (11X17) 1½"=1'-0" (22"X34") STRINGER TO FLOOR TRUSS

NOTES:

STAIRWAY CONSTRUCTION

MAX. HGT. OF RISER TO BE 73/4"

MIN. WIDTH OF TREAD TO BE 10"(EXCLUSIVE OF NOSING)

ALL TREADS LESS THAN 10" IN WIDTH SHALL HAVE APPROX. 1" OF NOSING

3/16" MAX. VARIATION IN RISERS/TREADS ADJACENT TO EACH OTHER

3/8" MAX. VARIATION IN ANY RISER/TREAD

HAND RAIL CIRCULAR CROSS SECTION DIA. TO BE 1 1/4" - 2" OR TO PROVIDE EQUIVALENT GRASPABILITY.

WINDERS: MIN. 6" WIDE @ NARROW END

34"-38" HANDRAIL HGT.

HEADROOM CLEARANCE MIN. 6'-8"

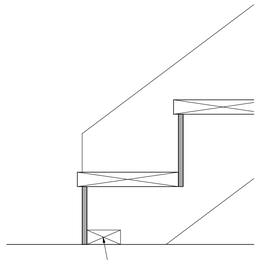

5 D6 TYP. STAIR CONNECT.
3/4"= 1'-0" (11X17) 1½"= 1'-0" (22"X34") STRINGER TO FLOOR

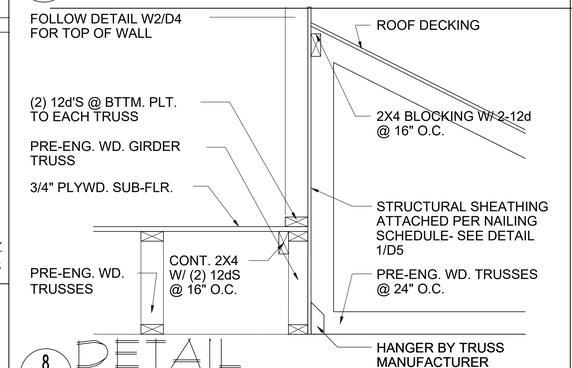

8 D6 DETAIL
1/2"=1'-0" (11X17) 1"=1'-0" (22X34)

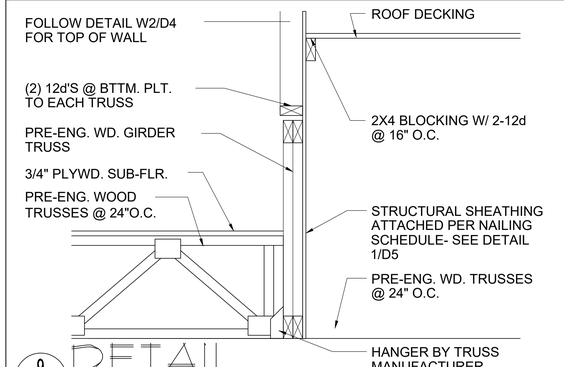

9 D6 DETAIL
1/2"=1'-0" (11X17) 1"=1'-0" (22X34)

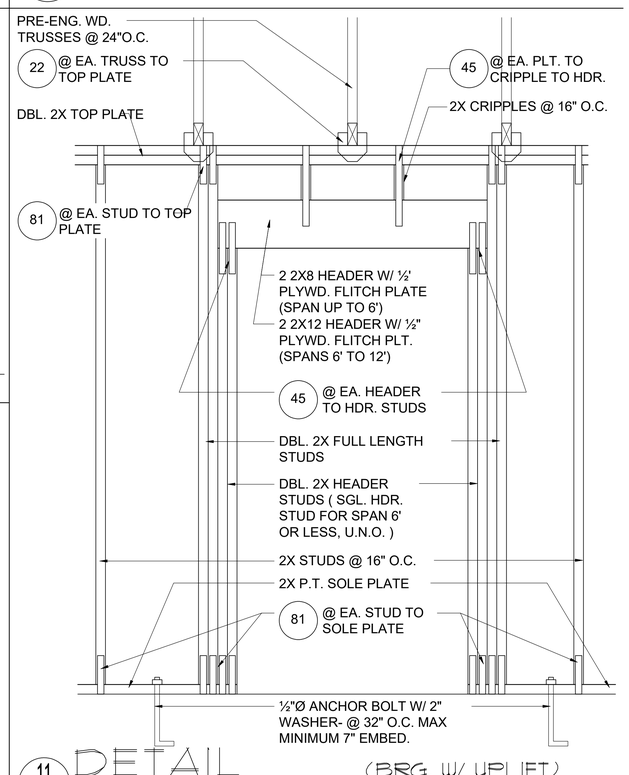

11 D6 DETAIL (BRG. W/ UPLIFT)
1/2"=1'-0" (11X17) 1"=1'-0" (22X34)

FIND US ON FACEBOOK & HOUZZ AT MJS CUSTOM HOME DESIGNS

THOMPSON ENGINEERING GROUP, INC.
2401 Vineland Road Suite A9 Orlando, FL. 32811
Phone: (407) 734-1440
Fax: (407) 734-1790
www.tegfl.com

815 Orienta Ave., Suite #1040
Altamonte Springs, Fl. 32701
Ph: (407) 629-6711
Fax: (407) 629-6776
www.mjsdesignersgroup.com
COPYRIGHT NOTICE: THESE PLANS, DESIGNS, AND IDEAS ARE THE EXCLUSIVE INTELLECTUAL PROPERTY OF MJS, INC. ALL RIGHTS RESERVED.

MJS designers group
residential-commercial-architecture

AIBD

GOBA
GREATER ORLANDO BUILDERS ASSOCIATION

6-Unit; Rear Load Detached

Models: Tyler, Jackson, Grant, Jackson, Grant & Monroe

Building Pad #XX
Lot# XX-XX, Subdivision
Street Address
City, State, Zip Code

A division of Park Square Enterprises Inc.
5200 Vineland Rd. Suite #200
Orlando, Fl. 32811
Phone: (407) 529-3000

Park Square HOMES

ISSUE DATE	10/17/2022
REVISIONS	
PROJECT:	22-1148
SCALE:	AS NOTED
DRAWN BY:	M.C.
DESIGNED BY:	MJS

STRUCTURAL DETAILS
SD6

Oct 17, 2022, 10:30am Carlos V:\Park Square Homes\MODELS\TOWNHOME MODELS\Townhomes (Orlando)\1- Townhome Models\Rear Load Detached Towns (Raised Heel)\6-Unit\SD6 Structural Details.dwg

© COPYRIGHT 2016 PARK SQUARE HOMES HEREBY RESERVES ITS COMMON LAW COPYRIGHTS IN THESE PLANS, IDEAS AND DESIGN. THESE PLANS, IDEAS AND DESIGNS ARE NOT TO BE COPIED OR MODIFIED IN ANY MATTER OR FORM WHATSOEVER, NOR ARE THEY TO BE ASSIGNED TO ANY THIRD PARTY WITHOUT FIRST OBTAINING THE EXPRESS WRITTEN PERMISSION FROM PARK SQUARE HOMES.

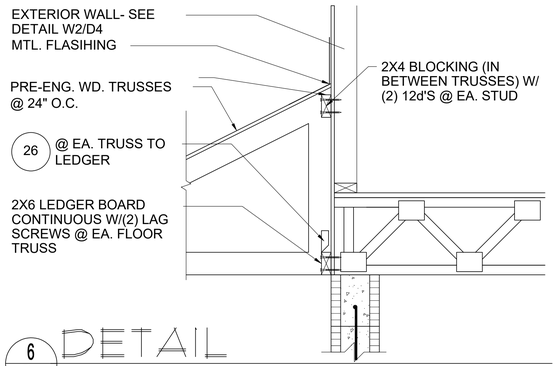

6 D7 DETAIL
1/2"=1'-0" (11X17) 1"=1'-0" (22X34)

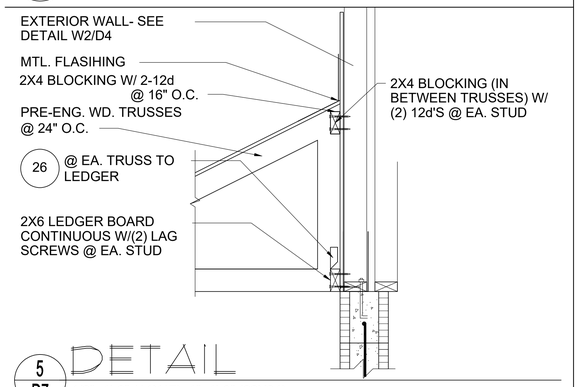

5 D7 DETAIL
1/2"=1'-0" (11X17) 1"=1'-0" (22X34)

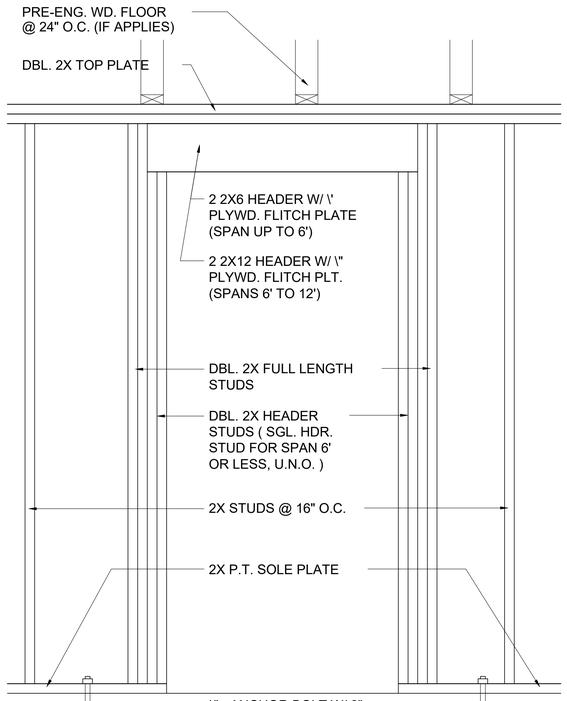

4 D7 DETAIL (BRG. W/O UPLIFT)
1/2"=1'-0" (11X17) 1"=1'-0" (22X34)

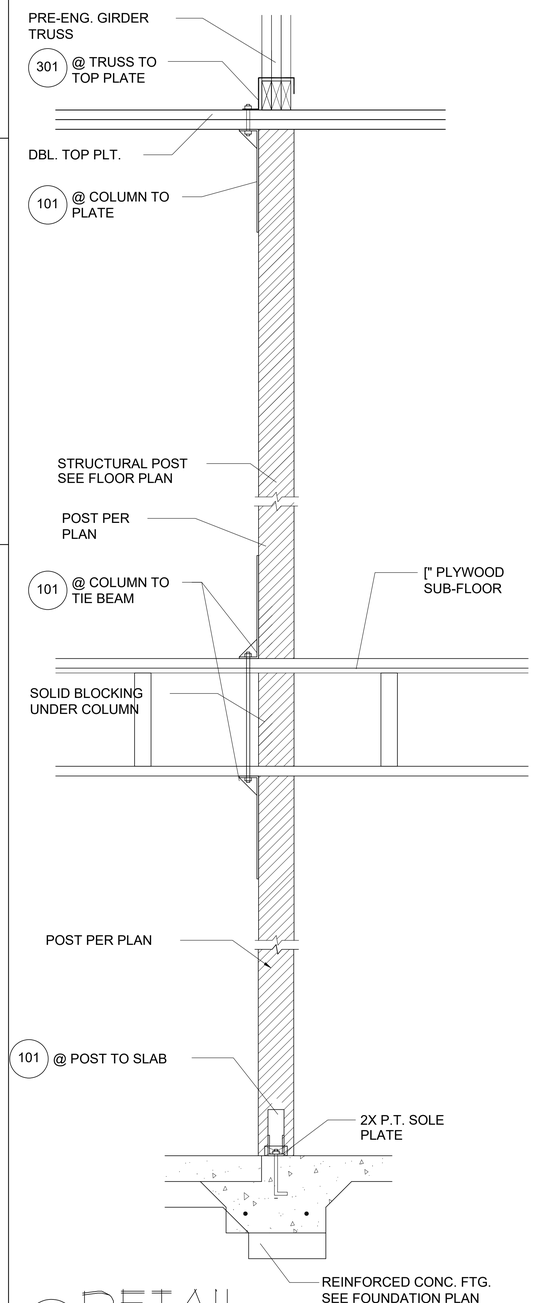

3 D7 DETAIL
1/2"=1'-0" (11X17) 1"=1'-0" (22X34)

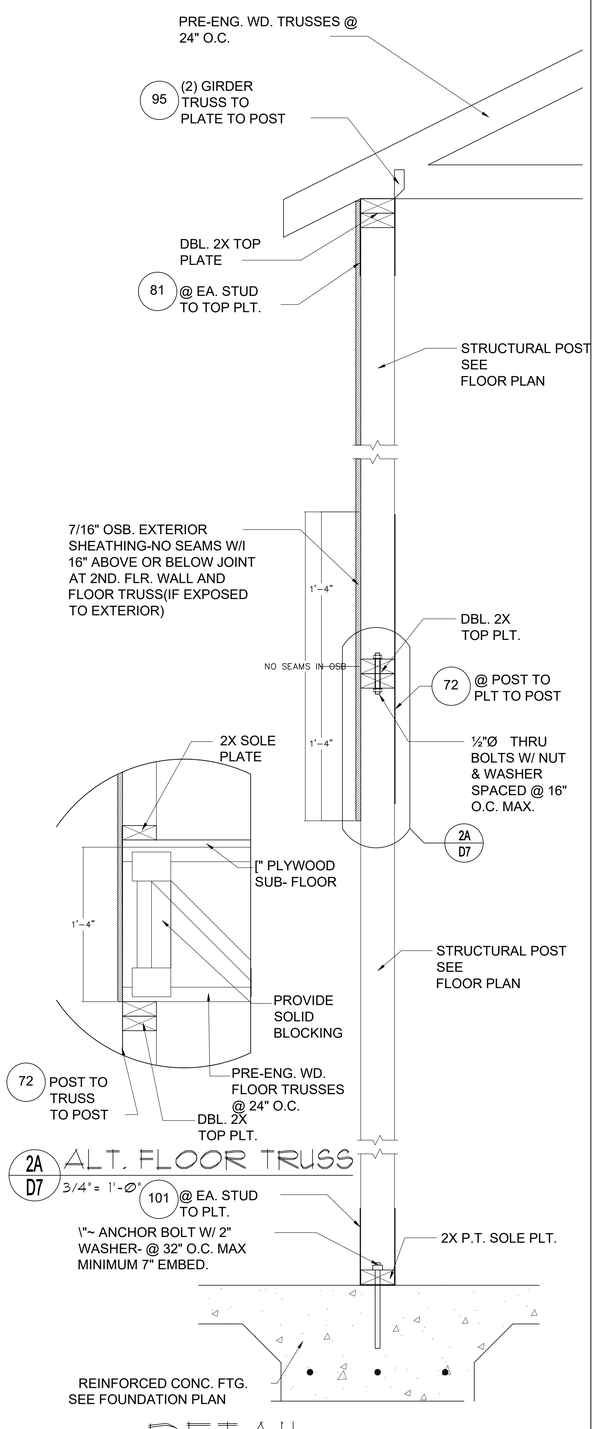

2A D7 ALT. FLOOR TRUSS
3/4"= 1'-0"

2 D7 DETAIL
3/4"=1'-0" (11X17) 1\"=1'-0" (22X34)

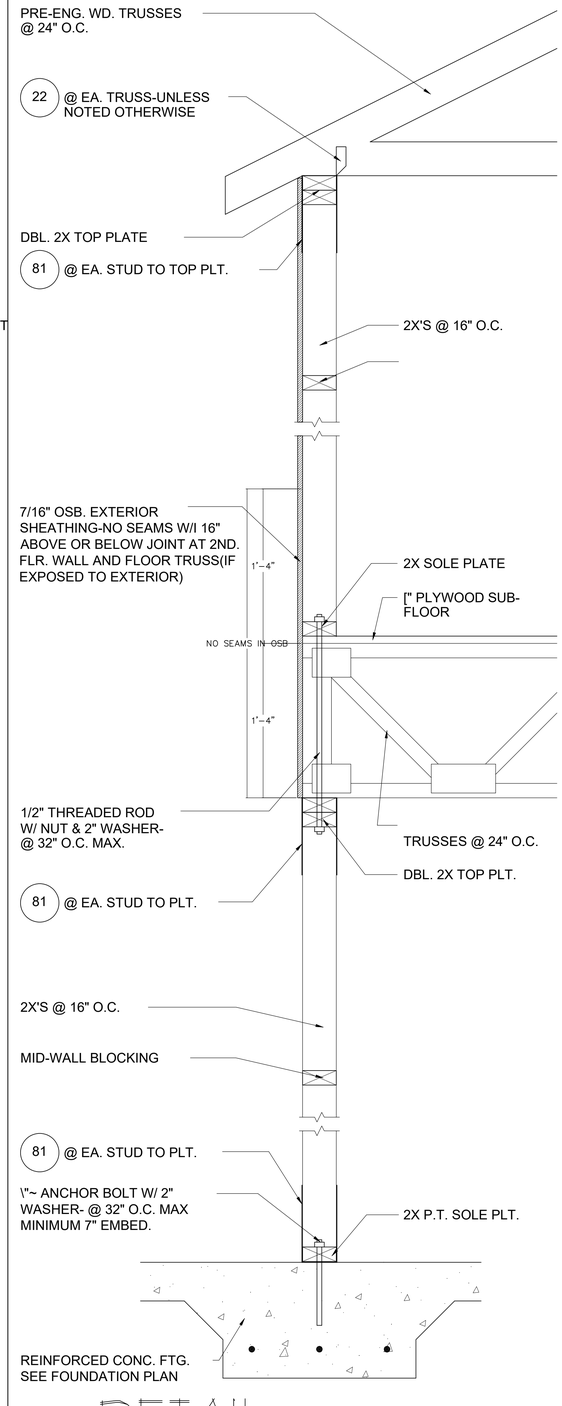

1 D7 DETAIL
3/4"=1'-0" (11X17) 1\"=1'-0" (22X34)

FIND US ON FACEBOOK & HOUZZ AT MJS CUSTOM HOME DESIGNS

TEG
THOMPSON ENGINEERING GROUP, INC.
Certificate of Authorization #30043
4401 Vineland Road Suite A9 Orlando, FL. 32811
Ph: (407) 894-5969
Fax: (407) 734-1790
www.tegfl.com

815 Orienta Ave., Suite #1040
Altamonte Springs, Fl. 32701
Ph: (407) 629-6711
Fax: (407) 629-6776
www.mjsdesignersgroup.com
COPYRIGHT NOTICE: THESE PLANS, DESIGNS, AND IDEAS ARE THE EXCLUSIVE INTELLECTUAL PROPERTY OF MJS, INC. ALL RIGHTS RESERVED.

MJS designers group
residential-commercial-architecture

AIBD

GOBA GREATER ORLANDO BUILDERS ASSOCIATION

6-Unit: Rear Load Detached

Models: Tyler, Jackson, Grant, Jackson, Grant & Monroe

Building Pad #XX
Lot# XX-XX, Subdivision
Street Address
City, State, Zip Code

A division of Park Square Enterprises Inc.
5200 Vineland Rd. Suite #200
Orlando, Fl. 32811
Phone: (407) 529-3000

Park Square HOMES

ISSUE DATE	10/17/2022
REVISIONS	
PROJECT:	22-1148
SCALE:	AS NOTED
DRAWN BY:	M.C.
DESIGNED BY:	MJS

STRUCTURAL DETAILS
SD7

Carlos V:\Park Square Homes\MODELS\TOWNHOME MODELS\Townhomes (Orlando)\1- Townhome Models\Rear Load Detached Towns (Raised Heel)\6-Unit\SD7 Structural Details.dwg
Oct 17, 2022, 10:36am

© COPYRIGHT 2016 PARK SQUARE HOMES HEREBY RESERVES ITS COMMON LAW COPYRIGHTS IN THESE PLANS, IDEAS AND DESIGN. THESE PLANS, IDEAS AND DESIGNS ARE NOT TO BE COPIED OR MODIFIED IN ANY MATTER OR FORM WHATSOEVER, NOR ARE THEY TO BE ASSIGNED TO ANY THIRD PARTY WITHOUT FIRST OBTAINING THE EXPRESS WRITTEN PERMISSION FROM PARK SQUARE HOMES.

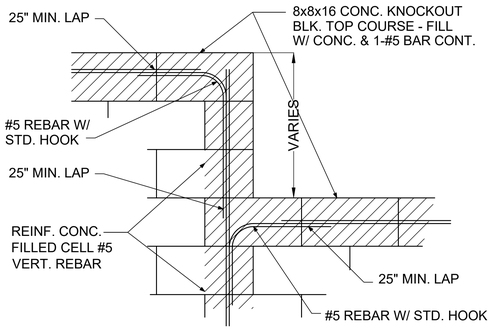

1 / D8 BLOCK WALL HT. TRANSITION

1/2"=1'-0" (11X17) 1"=1'-0" (22X34)

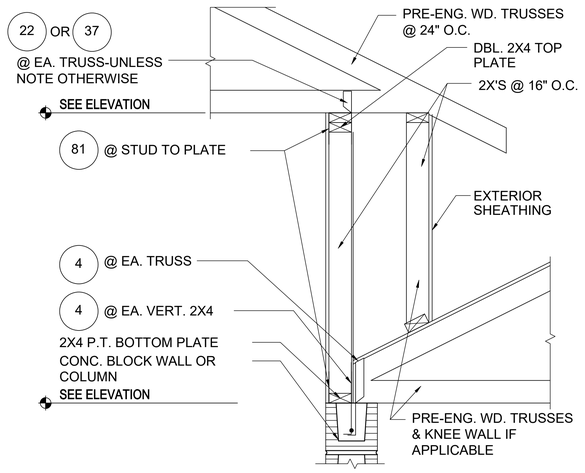

2 / D8 DETAIL

1/2"=1'-0" (11X17) 1"=1'-0" (22X34)

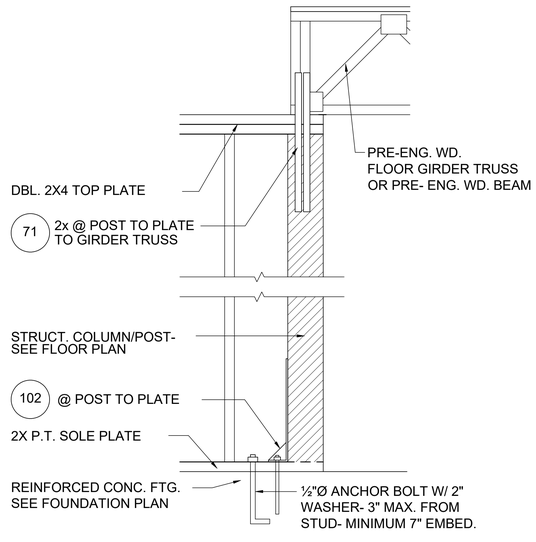

3 / D8 DETAIL

1/2"=1'-0" (11X17) 1"=1'-0" (22X34)

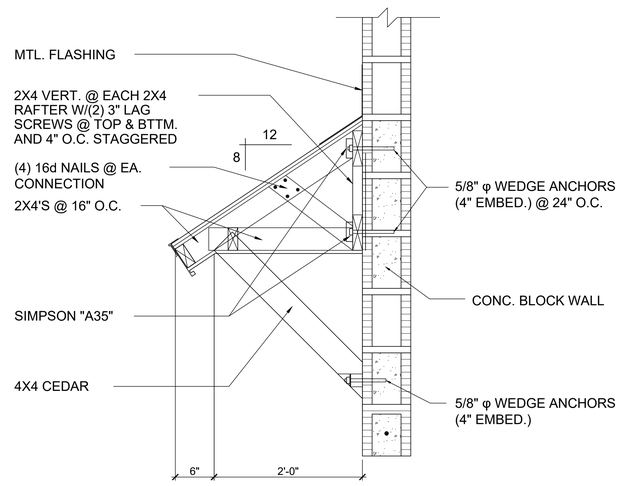

4 / D8 SHED ROOF DETAIL

1/2"= 1'-0" (11X17) 1"= 1'-0" (22"X34")

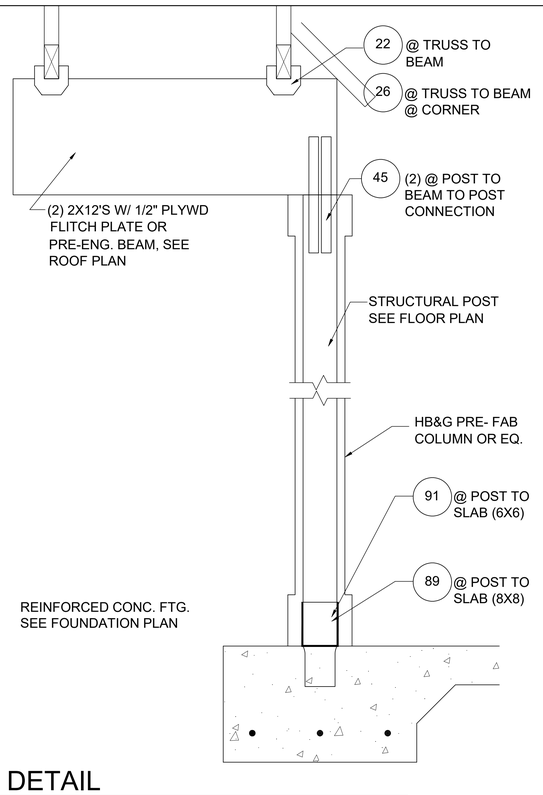

5 / D8 DETAIL

1/2"=1'-0" (11X17) 1"=1'-0" (22X34)

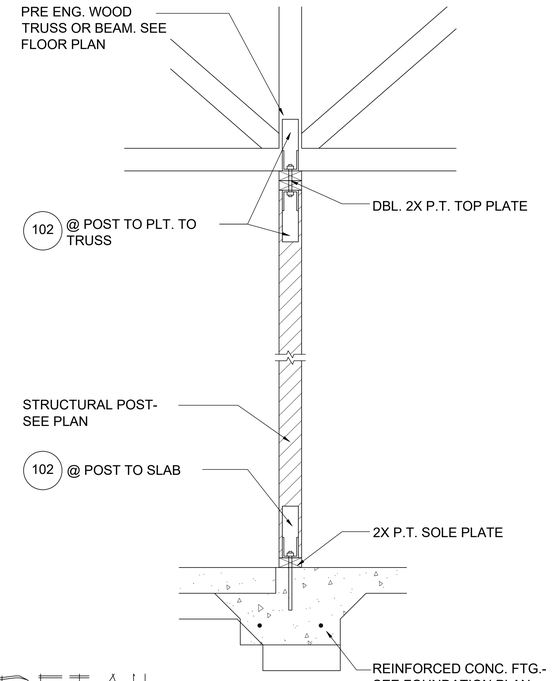

6 / D8 DETAIL

1/2"=1'-0" (11X17) 1"=1'-0" (22X34)

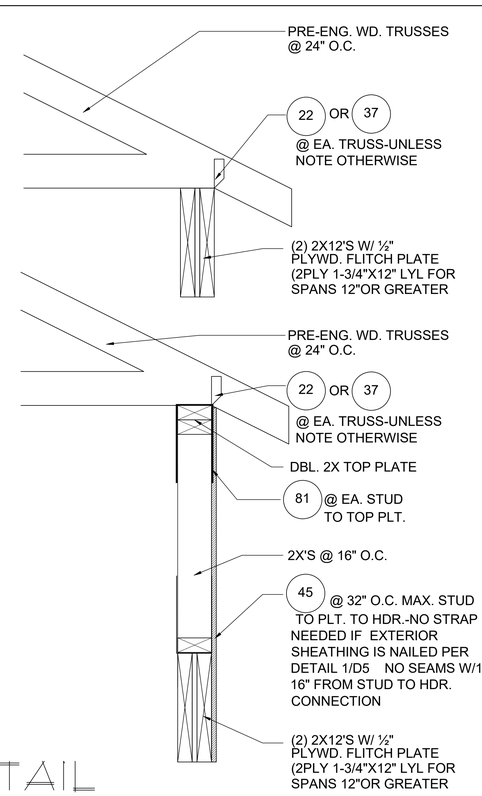

7 / D8 DETAIL

1/2"=1'-0" (11X17) 1"=1'-0" (22X34)

FIND US ON FACEBOOK & HOUZZ AT MJS CUSTOM HOME DESIGNS

THOMPSON ENGINEERING GROUP, INC.
4411 Vineland Road Suite A9 Orlando, FL. 32811
Ph: (407) 734-1440
Fax: (407) 734-1790
www.tegfl.com

815 Orienta Ave., Suite #1040
Altamonte Springs, Fl. 32701
Ph: (407) 629-6711
Fax: (407) 629-6776
www.mjsdesignersgroup.com
designers group
residential-commercial-architecture

COPYRIGHT NOTICE. THESE PLANS, DESIGNS, AND IDEAS ARE THE EXCLUSIVE INTELLECTUAL PROPERTY OF MJS, INC. ALL RIGHTS RESERVED.

6-Unit: Rear Load Detached

Models: Tyler, Jackson, Grant, Jackson, Grant & Monroe

Building Pad #XX
Lot# XX-XX, Subdivision
Street Address
City, State, Zip Code

A division of Park Square Enterprises Inc.
5200 Vineland Rd. Suite #200
Orlando, Fl. 32811
Phone: (407) 529-3000

Park Square HOMES

ISSUE DATE	10/17/2022
REVISIONS	
PROJECT:	22-1148
SCALE:	AS NOTED
DRAWN BY:	M.C.
DESIGNED BY:	MJS

STRUCTURAL DETAILS

SD8

Oct 17, 2022, 10:30am Carlos V:\Park Square Homes\MODELS\TOWNHOME MODELS\Townhomes (Orlando)\1- Townhome Models\Rear Load Detached Towns (Raised Heel)\6-Unit\SD8 Structural Details.dwg