Tyler Jackson Grant Jackson Monroe

(SUBDIVISION NAME) TOWNHOMES

Park Square HOMES

5-UNIT:
(TYLER, JACKSON, GRANT, JACKSON & MONROE)

PAD SIZE 110'-0"X 70'-0"

FIND US ON FACEBOOK & HOUZZ AT MJS CUSTOM HOME DESIGNS

SHEET INDEX:

REVISION SCHEDULE:

NO:	DATE:	DESCRIPTION:	BY:
1	06/08/22	MASTER CREATED	M.C.
2	12/16/22	MASTER REVISIONS	C.C.
3	01/19/23	MASTER REVISIONS	C.C.
4	07/24/23	REMOVED DETAIL BUBBLES REFERENCING UL FIRE WALL ASSEMBLY	C.C.
5	07/26/23	RELOCATED ELEC. PANEL TO GARAGE	C.C.

DISTRIBUTED LIVE LOAD

(IN POUNDS PER SQ. FT.)

UNINHABITABLE ATTICS WITHOUT STORAGE	10
UNINHABITABLE ATTICS WITH LIMITED STORAGE	20
HABITABLE ATTICS & ATTICS SERVED WITH FIXED STAIRS	30
BALCONIES (EXTERIOR) AND DECKS	40
FIRE ESCAPES	40
GUARDS AND HANDRAILS	200
GUARD INFILL COMPONENTS	50
PASSENGER VEHICLE GARAGES	50
ROOMS OTHER THAN SLEEPING ROOMS	40
SLEEPING ROOMS	30
STAIRS	40

ANSI STANDARD FOR MEASURING HOUSES

THE ANSI STANDARD FOR MEASURING HOUSES:
NATIONAL STANDARD Z765-1996 NEW CONSTRUCTION THE ANSI STANDARDS BASE FLOOR AREA CALCULATIONS ON THE EXTERIOR DIMENSIONS OF THE BUILDING AT EACH FLOOR LEVEL AND INCLUDE ALL INTERIOR WALLS AND VOIDS. FOR ATTACHED UNITS, THE OUTSIDE DIMENSION IS THE CENTER LINE OF THE COMMON WALLS. INTERNAL ROOM DIMENSIONS AREN'T USED IN THIS SYSTEM OF MEASURING. THE ANSI STANDARDS BASE FLOOR AREA CALCULATIONS ON THE EXTERIOR DIMENSIONS OF THE BUILDING AT EACH FLOOR LEVEL AND INCLUDE ALL INTERIOR WALLS AND VOIDS. FOR ATTACHED UNITS, THE OUTSIDE DIMENSION IS THE CENTER LINE OF THE COMMON WALLS. INTERNAL ROOM DIMENSIONS AREN'T USED IN THIS SYSTEM OF MEASURING.

THE ANSI STANDARDS BASE FLOOR AREA CALCULATIONS ON THE EXTERIOR DIMENSIONS OF THE BUILDING AT EACH FLOOR LEVEL AND INCLUDE ALL INTERIOR WALLS AND VOIDS SEPARATED INTO TWO AREAS:

1. AIR-CONDITIONED SPACE
2. NON-AIR-CONDITIONED SPACE (GARAGES, PATIOS, PORCHES, BREEZEWAYS)

THE ANSI STANDARDS DEFINE "FINISHED AREA" AS "AN ENCLOSED AREA IN A HOUSE SUITABLE FOR YEAR-ROUND USE, EMBODYING WALLS, FLOORS, AND CEILINGS THAT ARE LIKE THE REST OF THE MEASUREMENTS MUST BE TAKEN TO THE NEAREST INCH OR TENTH OF A FOOT, AND FLOOR AREA MUST BE REPORTED TO THE NEAREST SQUARE FOOT. THESE WOULD INCLUDE BONUS/ATTIC SPACES AND ARE USUALLY LISTED SEPARATELY.

GENERAL CONTRACTOR:

IT IS THE RESPONSIBILITY OF THE GENERAL CONTRACTOR TO INSTALL ALL MATERIALS MEETING FLORIDA APPROVAL COMPLIANCE TO AVOID WATER INTRUSION AND MOISTURE INTRUSION ON WINDOWS, DOORS, ROOF, AND ANY OTHER AREA AROUND EACH UNIT/ HOUSE/ APARTMENT/ CONDOMINIUM/ TOWNHOUSE.

ENGINEERING KEY

DESIGN REQUIREMENTS
A. ROOF LIVE LOAD IS 20 PSF
B. FLOORS LIVE LOAD IS 40 PSF, BALCONIES, DECKS, STAIRS, LIVE LOAD IS 60PSF

NOTE: THIS STRUCTURE HAS BEEN DESIGNED TO MEET OR EXCEED REQUIREMENTS OF THE (2020) FLORIDA BUILDING CODE, RESIDENTIAL (7TH EDITION)

1. WIND EXPOSURE - CATEGORY (C)
2. ULTIMATE WIND SPEED - 140MPH.
   NOMINAL WIND SPEED - 109MPH.
3. WIND IMPORTANCE FACTOR - 1.0
4. INTERNAL PRESSURE COEFFICIENT- .18
5. MAXIMUM PRESSURE FOR COMPONENTS AND CLADDING, 21.0 p.s.f.-28.1 p.s.f. UNLESS NOTED OTHERWISE.
6. SINGLE FAMILY RESIDENCE TO BE RISK CATEGORY II.

DESIGN STATEMENT

THIS STRUCTURE HAS BEEN DESIGNED TO MEET OR EXCEED REQUIREMENTS OF THE (2020) FLORIDA BUILDING CODE RESIDENTIAL (7TH EDITION)

EFFECTIVE WIND AREA (SQ. FT.)	WIND PRESSURE AND SUCTION (PSF.) (+) VALUE DENOTES PRESSURE (-) VALUE DENOTES SUCTION	
AREA	4	5
10	(+) 29.4 / (-) 31.9	(+) 29.4 / (-) 39.4
20	(+) 28.1 / (-) 30.6	(+) 28.1 / (-) 36.7
50	(+) 26.3 / (-) 28.8	(+) 26.3 / (-) 33.2
100	(+) 25.0 / (-) 27.5	(+) 25.0 / (-) 30.6
GARAGE DOORS		
16'-0" x 8'-0"	16'-0" x 7'-0"	18'-0" x 8'-0"
(+) 21.7 (-) 26.3	(+) 21.9 (-) 26.7	(+) 24.4 (-) 27.2
9'-0" x 8'-0"	9'-0" x 7'-0"	OVERHANG (-) 55.30
(+) 25.80 (-) 29.10	(+) 25.9 (-) 29.2	
8'-0" x 8'-0"	8'-0" x 7'-0"	
(+) 22.9 (-) 28.1	(+) 23.1 (-) 29.0	

WIND PRESSURE AND SUCTION DIAGRAM

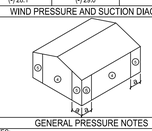

GENERAL PRESSURE NOTES

NOTES:
1. "N" END ZONE IS ONLY WITHIN 5'-0" OF ALL EXTERIOR BUILDING CORNERS.
- INDICATED PRESSURES CAN BE INTERPOLATED FOR OTHER DOOR SIZES, OTHERWISE USE LOAD ASSOCIATED WITH THE LOWER EFFECTIVE AREA.

RKE

FLORIDA BUILDING CODE:

(FBC) 2020 (7TH EDITION)

DESIGN CRITERIA:
- 2020 FLORIDA BUILDING CODE (BUILDING) - 7TH EDITION.
- 2020 FLORIDA BUILDING CODE (RESIDENTIAL) - 7TH EDITION.
- 2020 FLORIDA BUILDING CODE (PLUMBING) - 7TH EDITION.
- 2020 FLORIDA BUILDING CODE (MECHANICAL) - 7TH EDITION.
- 2020 FLORIDA BUILDING CODE (FUEL/GAS) - 7TH EDITION.
- 2020 FLORIDA BUILDING CODE (EXISTING BUILDING) 7TH EDITION.
- 2020 FLORIDA BUILDING CODE (ACCESSIBILITY) 7TH EDITION.
- 2020 FLORIDA BUILDING CODE (ENERGY CONSERVATION) 7TH EDITION.
- 2020 FLORIDA FIRE PREVENTION CODE (7TH EDITION).
- 2017 NATIONAL ELECTRICAL CODE (NEC)
- 2010 NFPA 101 - LIFE SAFETY CODE
- OCCUPANCY CLASSIFICATION: GROUP R-3 (TOWNHOMES)
- CONSTRUCTION TYPE: TYPE VB (FBC-R 602.3)
- SPRINKLED: NO (FBC-B SECTION 903)
- NUMBER OF STORIES: 2 STORIES

SPECIFIC PARAMETERS FROM FBC 2020 USED FOR DESIGN INCLUDE:
- CONCRETE MASONRY RESIDENTIAL
- CONSTRUCTION WOOD FRAME CONSTRUCTION
- AMERICAN SOCIETY OF CIVIL ENGINEERS

THOMPSON ENGINEERING GROUP, INC.
4401 Vineland Road Suite A6 Orlando, FL 32811
Phone: (407) 734-1790
Fax: (407) 734-1790
www.tegfl.com

815 Orienta Ave., Suite #1040
Altamonte Springs, Fl. 32701
Ph: (407) 629-6711
Fax: (407) 629-6776
www.mjsdesignersgroup.com

MJS designers group
residential+commercial+architecture

GOBA GREATER ORLANDO BUILDERS ASSOCIATION

5-Unit: Rear Load Detached
Models: Tyler, Jackson, Grant, Jackson & Monroe
Building Pad #XX
Lot# XX-XX, Subdivision
Street Address
City, State, Zip Code

A division of Park Square Enterprises Inc.
5200 Vineland Rd. Suite #200
Orlando, Fl. 32811
Phone: (407) 329-3000

Park Square HOMES

ISSUE DATE	02/14/2023
REVISIONS	
PROJECT:	22-1148
SCALE:	AS NOTED
DRAWN BY:	C.C.
DESIGNED BY:	MJS

COVER PAGE
A0

Design1 C:\Users\Design1\OneDrive - Thompson Engineering Group\Desktop\5-Unit\dwg Files\00 Cover Sheet.dwg
Jul 26, 2023, 12:59pm

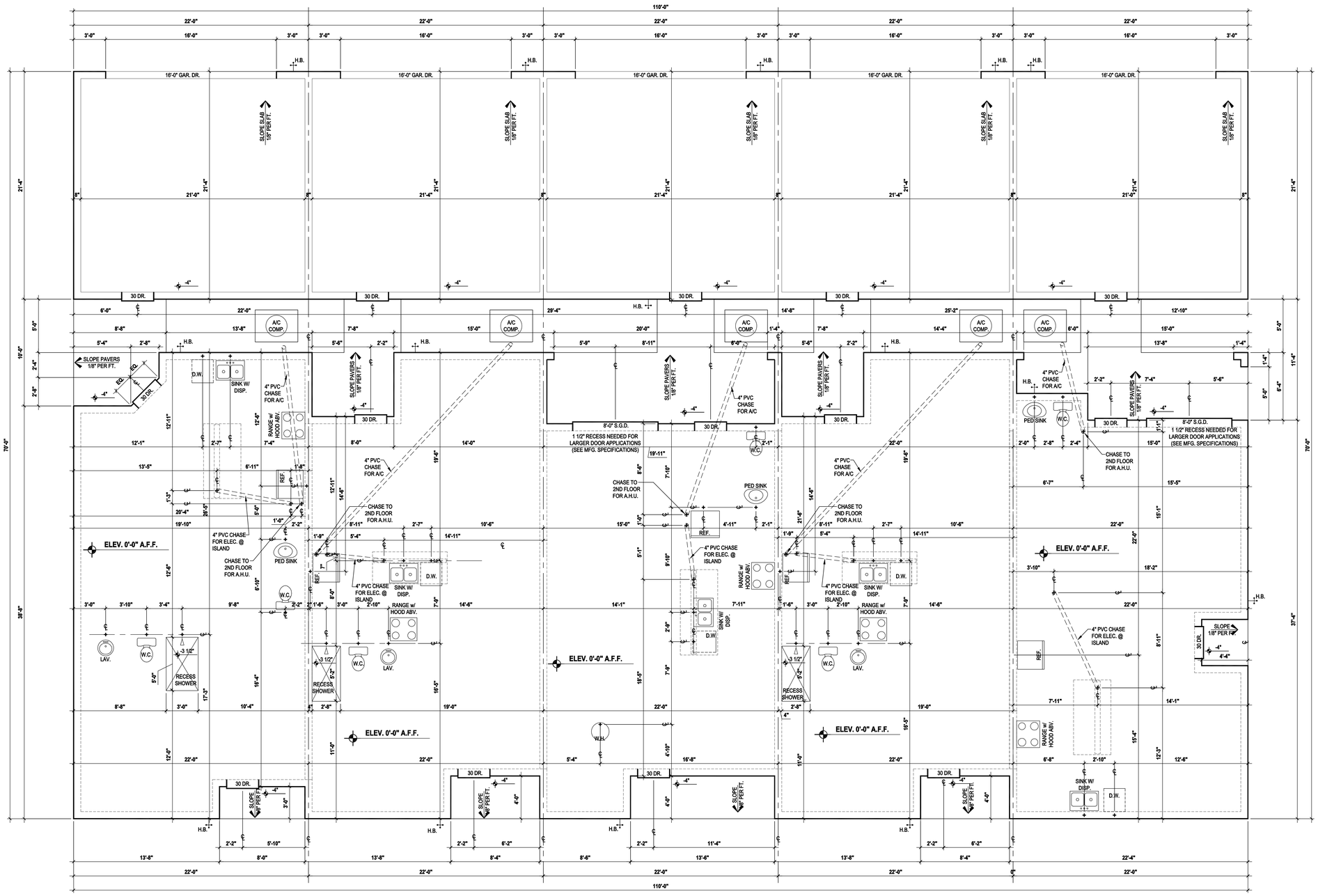

Slab Plan

SCALE: 1/4" = 1'-0"

FIND US ON FACEBOOK & HOUZZ AT MJS CUSTOM HOME DESIGNS

THOMPSON ENGINEERING GROUP, INC.
4401 Vineland Road Suite A6 Orlando, FL 32811
Ph: (407) 734-1790
Fax: (407) 734-1790
www.tegfl.com

MJS designers group
residential•commercial•architecture
815 Orienta Ave., Suite #1040
Altamonte Springs, Fl. 32701
Ph: (407) 629-6711
Fax: (407) 629-6776
www.mjsdesignersgroup.com

A I B D

GOBA
GREATER ORLANDO BUILDERS ASSOCIATION

5-Unit: Rear Load Detached

Models: Tyler, Jackson, Grant, Jackson & Monroe

Building Pad #XX
Lot# XX-XX, Subdivision
Street Address
City, State, Zip Code

A division of Park Square Enterprises Inc.
5200 Vineland Rd. Suite #200
Orlando, Fl. 32811
Phone: (407) 529-3000

Park Square HOMES

ISSUE DATE	02/14/2023
REVISIONS	
PROJECT:	22-1148
SCALE:	AS NOTED
DRAWN BY:	C.C.
DESIGNED BY:	MJS

SLAB PLAN
A1

Carlos V:\Park Square Homes\MODELS\TOWNHOME MODELS\Townhomes (Orlando)\1- Townhome Models\Rear Load Detached Towns (Raised Heel)\5-Unit\A1 Slab Plan.dwg Jul 26, 2023,9:11am

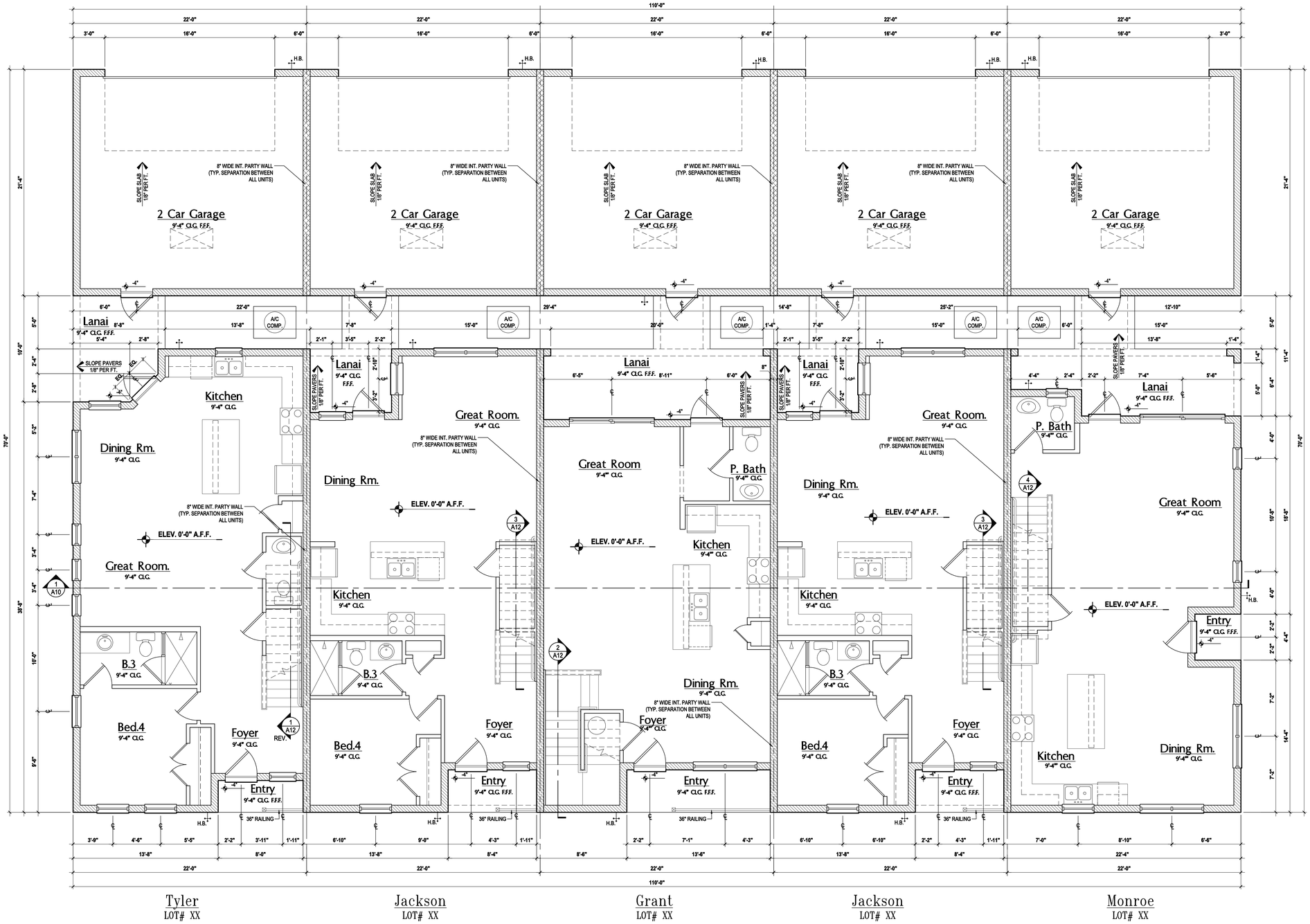

GENERAL NOTES KEY:

ABBREVIATIONS:

MT - METAL THRESHOLD	TEMP - TEMPERED GLASS
FR - FRENCH DOORS	SH - SINGLE HUNG
SL - SIDE LIGHT	DH - DOUBLE HUNG
FG - FIXED GLASS	CSMT- CASEMENT
TR - TRANSOM	HR - HORIZONTAL ROLLER
GB - GLASS BLOCK	BP - BYPASS
PKT - POCKET DOOR	BF - BIFOLD
SVC - SERVICE DOOR	TYP. - TYPICAL
OBS - OBSCURED GLASS	

NOTES:

1. CONTRACTOR TO VERIFY ALL DIMENSIONS ON JOB SITE.
2. DO NOT SCALE PRINTS! CONSTRUCTION TO BE FROM CALCULATED DIMENSIONS ONLY. ANY DISCREPANCIES OR ERRORS TO BE REPORTED PROMPTLY TO SUPERVISOR FOR CLARIFICATION.
3. MECHANICAL EQUIP. LOCATIONS WILL BE DETERMINED BY COMMUNITY AND COUNTY CODES.
4. A/C CONDENSER UNIT TO BE ANCHORED TO SLAB PER CODE M307.2 & M1309.3.
5. PROVIDE RECESS H&C WATER W/ DRAIN @ WASHER SPACE.
6. VENT DRYER THRU EXTERIOR WALL U.N.O.
7. PROVIDE COLD WATER LINE FOR ICE MAKER LINE @ REF. SPACE.
8. PROVIDE RECESS H&C WATER W/ DRAIN @ WASHER SPACE.
9. SAG RESISTANT DRYWALL ON ALL CEILINGS.
10. PULL ALL DIMENSIONS FROM THE REAR OF PLAN.
11. REFER TO EXTERIOR ELEVATIONS & TYP. DETAIL SHEETS FOR EXTERIOR WALL FINISH SPEC'S.
12. REFER TO DETAIL SHEETS FOR FLASHING REQUIREMENTS AT ALL WOOD TO MASONRY INTERFACES.
13. ALL INTERIOR FRAME WALL DIMENSIONS TO BE 3 $\frac{1}{2}$" U.N.O.
14. ALL EXTERIOR BLOCK WALL DIMENSIONS TO BE 7 $\frac{1}{2}$" U.N.O.
15. C.M.U. & FRAME WALL SYSTEM SEGMENTS WHICH HAVE AN UNINTERRUPTED LENGTH OF 12'-0" OR MORE SHALL BE CONSIDERED SHEAR WALL SWS = SHEAR WALL SEGMENTS.
16. THE GARAGE SHALL BE SEPARATED AS REQUIRED BY TABLE R302.6. OPENINGS IN GARAGE WALLS SHALL COMPLY WITH SECTION R302.5. ATTACHMENT OF GYPSUM BOARD SHALL COMPLY WITH TABLE R702.3.5. THE WALL SEPARATION PROVISIONS OF TABLE R302.6 SHALL NOT APPLY TO GARAGE WALLS THAT ARE PERPENDICULAR TO THE ADJACENT DWELLING UNIT WALL.
17. ENCLOSED SPACE UNDER STAIRS THAT IS ACCESSED BY A DOOR OR ACCESS PANEL SHALL HAVE WALLS, UNDER-STAIR SURFACE AND ANY SOFFITS PROTECTED ON THE ENCLOSED SIDE WITH 1/2-INCH (12.7 MM) GYPSUM BOARD.
18. GARAGE DOOR TO BE CERTIFIED BY MFR. FOR MIN. 140 M.P.H.
19. ALL TUB & SHOWER UNITS WILL HAVE ANTI-SCALDING DEVICES INSTALLED.
20. ALL OPERABLE WINDOWS LOCATED MORE THAN 72" ABV. SURFACE BELOW SHALL HAVE THE LOWEST PORTION OF WINDOW CLEAR OPENING A MIN. OF 24" ABOVE FINISHED FLOOR BEING SERVER PER (FBC-R312.2).
21. ALL INT. DOORS TO BE 6'-8" TALL U.N.O. OR PER BUILDER / CLIENT.
22. SPECIALTY WINDOWS/DOORS, FIXED GLASS WINDOWS, AND TRANSOMS ARE NOTED ON PLANS.
23. ALL DOORS & WINDOWS THAT ARE EGRESS WILL BE LABELED AS SUCH AND CONFORM TO FBC R310.2 EERO
24. SOIL TESTING IS RECOMMENDED, BUT IS NOT REQUIRED. THE DESIGN TEAM AT MJS & E O.R STRONGLY RECOMMEND A SOIL TEST TO CONFIRM SOIL BEARING CAPACITY AND SURFACE GEO-TECHNICAL CONDITIONS. FOOTINGS SHALL BEAR ON UNDISTURBED SOIL A/O PROPERLY COMPACTED FILL (2000 PSF MIN.). FILL MATERIAL SHALL BE COMPACTED TO 95% DENSITY OF A STANDARD PROCTOR. TO BE VERIFIED BY GENERAL CONTRACTOR / OWNER.
25. OPENING BETWEEN GARAGE AND RESIDENCE SHALL BE EQUIPPED WITH A 20 MIN. FIRE RATED SOLID WOOD OR HONEYCOMB CORE STEEL DOOR NOT LESS THAN 1 3/8" THICKNESS AS PER FBC-R302.5.1.
26. 1/2" GYPSUM BOARD APPLIED TO THE GARAGE SIDE OF WALL TO UNDERSIDE OF DECKING.
27. 5/8" TYPE X DRYWALL ON GARAGE CEILING BELOW ANY HABITABLE SPACE

WINDOW / DOOR NOTE KEY:

WINDOW SIZE CALLOUT:
2040 = 2'-0" x 4'-0"
2050 = 2'-0" x 5'-0"
2060 = 2'-0" x 6'-0"
- ALL WINDOW CALLOUTS ARE MEASURED IN FEET & INCHES AS PER THE EXAMPLE TABLE ABOVE.

DOOR SIZE CALLOUT:
20 = 2'-0" 40 B.F. = 4'-0" BI-FOLD
24 = 2'-4" 50 B.F. = 5'-0" BI-FOLD
26 = 2'-6" 60 B.F. = 6'-0" BI-FOLD
28 = 2'-8"
30 = 3'-0"
- ALL INTERIOR DOOR HEIGHTS ARE TO BE DETERMINED BY THE BUILDER.

BRG. HT. LEGEND

20'-8" BRG. HT. 2-HR. FIREWALL (UL 905)

21'-4" BRG. HT. 2-HR. FIREWALL (UL 905)

NOTE: EXTEND UL 373 ASSEMBLY TO UNDERSIDE OF ROOF DECKING

Area Tabulations

Living:

1st floor:	4,234	sf
2nd floor:	4,509	sf
Total Living:	8,743	sf
entry:	168	sf
garage:	2,345	sf
lanai:	529	sf
Total Area:	11,785	sf

First Floor Overall

SCALE: 1/4" = 1'-0"

THOMPSON ENGINEERING GROUP, INC.
4401 Vineland Road Suite #5 Orlando, FL 32811
Ph: (407) 734-1450
Fax: (407) 734-1790
www.tegfl.com

815 Orienta Ave., Suite #1040
Altamonte Springs, Fl. 32701
Ph: (407) 629-6711
Fax: (407) 629-6776
www.mjsdesignersgroup.com

MJS designers group
residential-commercial-architecture

AIBD

GOBA
GREATER ORLANDO BUILDERS ASSOCIATION

5-Unit: Rear Load Detached

Models: Tyler, Jackson, Grant, Jackson & Monroe

Building Pad #XX
Lot# XX-XX, Subdivision
Street Address
City, State. Zip Code

A division of Park Square Enterprises Inc.
5200 Vineland Rd. Suite #200
Orlando, Fl. 32811
Phone: (407) 529-3000

Park Square HOMES

ISSUE DATE	02/14/2023
REVISIONS	
PROJECT:	22-1148
SCALE:	AS NOTED
DRAWN BY:	C.C.
DESIGNED BY:	MJS

FIRST FLOOR
A2

Jul 26, 2023,9:11am Carlos V:\Park Square Homes\MODELS\TOWNHOME MODELS\Townhomes (Orlando)\1- Townhome Models\Rear Load Detached Towns (Raised Heel)\5-Unit\A2 First Floor Overall.dwg

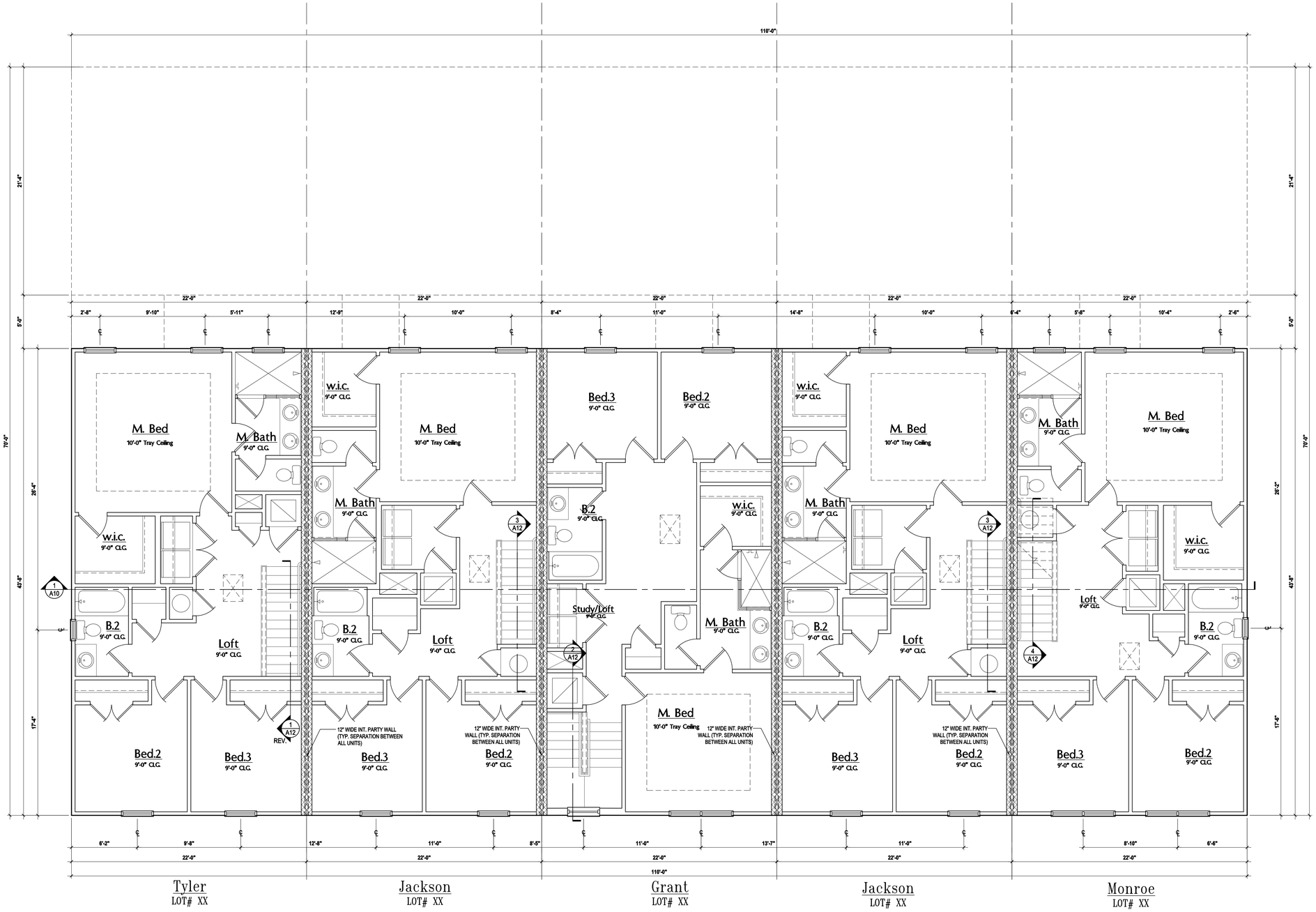

GENERAL NOTES KEY:

ABBREVIATIONS:

MT - METAL THRESHOLD	TEMP - TEMPERED GLASS
FR - FRENCH DOORS	SH - SINGLE HUNG
SL - SIDE LIGHT	DH - DOUBLE HUNG
FG - FIXED GLASS	CSMT- CASEMENT
TR - TRANSOM	HR - HORIZONTAL ROLLER
GB - GLASS BLOCK	BP - BYPASS
PKT - POCKET DOOR	BF - BIFOLD
SVC - SERVICE DOOR	TYP. - TYPICAL
OBS - OBSCURED GLASS	

NOTES:

1. CONTRACTOR TO VERIFY ALL DIMENSIONS ON JOB SITE.
2. DO NOT SCALE PRINTS! CONSTRUCTION TO BE FROM CALCULATED DIMENSIONS ONLY. ANY DISCREPANCIES OR ERRORS TO BE REPORTED PROMPTLY TO SUPERVISOR FOR CLARIFICATION.
3. MECHANICAL EQUIP. LOCATIONS WILL BE DETERMINED BY COMMUNITY AND COUNTY CODES.
4. A/C CONDENSER UNIT TO BE ANCHORED TO SLAB PER CODE M307.2 & M1309.3.
5. PROVIDE RECESS H&C WATER W/ DRAIN @ WASHER SPACE.
6. VENT DRYER THRU EXTERIOR WALL U.N.O.
7. PROVIDE COLD WATER LINE FOR ICE MAKER LINE @ REF. SPACE.
8. PROVIDE RECESS H&C WATER W/ DRAIN @ WASHER SPACE.
9. SAG RESISTANT DRYWALL ON ALL CEILINGS.
10. PULL ALL DIMENSIONS FROM THE REAR OF PLAN.
11. REFER TO EXTERIOR ELEVATIONS & TYP. DETAIL SHEETS FOR EXTERIOR WALL FINISH SPEC'S.
12. REFER TO DETAIL SHEETS FOR FLASHING REQUIREMENTS AT ALL WOOD TO MASONRY INTERFACES.
13. ALL INTERIOR FRAME WALL DIMENSIONS TO BE 3 5/8" U.N.O.
14. ALL EXTERIOR BLOCK WALL DIMENSIONS TO BE 7 5/8" U.N.O.
15. C.M.U. & FRAME WALL SYSTEM SEGMENTS WHICH HAVE AN UNINTERRUPTED LENGTH OF 12'-0" OR MORE SHALL BE CONSIDERED SHEAR WALL SWS = SHEAR WALL SEGMENTS.
16. THE GARAGE SHALL BE SEPARATED AS REQUIRED BY TABLE R302.6. OPENINGS IN GARAGE WALLS SHALL COMPLY WITH SECTION R302.5. ATTACHMENT OF GYPSUM BOARD SHALL COMPLY WITH TABLE R702.3.5. THE WALL SEPARATION PROVISIONS OF TABLE R302.6 SHALL NOT APPLY TO GARAGE WALLS THAT ARE PERPENDICULAR TO THE ADJACENT DWELLING UNIT WALL.
17. ENCLOSED SPACE UNDER STAIRS THAT IS ACCESSED BY A DOOR OR ACCESS PANEL SHALL HAVE WALLS, UNDER-STAIR SURFACE AND ANY SOFFITS PROTECTED ON THE ENCLOSED SIDE WITH 1/2-INCH (12.7 MM) GYPSUM BOARD.
18. GARAGE DOOR TO BE CERTIFIED BY MFR. FOR MIN. 140 M.P.H.
19. ALL TUB & SHOWER UNITS WILL HAVE ANTI-SCALDING DEVICES INSTALLED.
20. ALL OPERABLE WINDOWS LOCATED MORE THAN 72" ABV. SURFACE BELOW SHALL HAVE THE LOWEST PORTION OF WINDOW CLEAR OPENING A MIN. OF 24" ABOVE FINISHED FLOOR BEING SERVER PER (FBC-R312.2).
21. ALL INT. DOORS TO BE 6'-8" TALL U.N.O. OR PER BUILDER / CLIENT.
22. SPECIALTY WINDOWS/DOORS, FIXED GLASS WINDOWS, AND TRANSOMS ARE NOTED ON PLANS.
23. ALL DOORS & WINDOWS THAT ARE EGRESS WILL BE LABELED AS SUCH AND CONFORM TO FBC R310.2 EERO
24. SOIL TESTING IS RECOMMENDED, BUT IS NOT REQUIRED. THE DESIGN TEAM AT MJS & E.O.R STRONGLY RECOMMEND A SOIL TEST TO CONFIRM SOIL BEARING CAPACITY AND SURFACE GEO-TECHNICAL CONDITIONS. FOOTINGS SHALL BEAR ON UNDISTURBED SOIL A/O PROPERLY COMPACTED FILL (2000 PSF MIN.). FILL MATERIAL SHALL BE COMPACTED TO 95% DENSITY OF A STANDARD PROCTOR. TO BE VERIFIED BY GENERAL CONTRACTOR / OWNER.
25. OPENING BETWEEN GARAGE AND RESIDENCE SHALL BE EQUIPPED WITH A 20 MIN. FIRE RATED SOLID WOOD OR HONEYCOMB CORE STEEL DOOR NOT LESS THAN 1 3/8" THICKNESS AS PER FBC-R302.5.1.
26. 1/2" GYPSUM BOARD APPLIED TO THE GARAGE SIDE OF WALL TO UNDERSIDE OF DECKING.
27. 5/8" TYPE X DRYWALL ON GARAGE CEILING BELOW ANY HABITABLE SPACE

WINDOW / DOOR NOTE KEY:

WINDOW SIZE CALLOUT:
2040 = 2'-0" x 4'-0"
2050 = 2'-0" x 5'-0"
2060 = 2'-0" x 6'-0"
* ALL WINDOW CALLOUTS ARE MEASURED IN FEET & INCHES AS PER THE EXAMPLE TABLE ABOVE.

DOOR SIZE CALLOUT:

20 = 2'-0"	40 B.F. = 4'-0" BI-FOLD
24 = 2'-4"	50 B.F. = 5'-0" BI-FOLD
26 = 2'-6"	60 B.F. = 6'-0" BI-FOLD
28 = 2'-8"	
30 = 3'-0"	

* ALL INTERIOR DOOR HEIGHTS ARE TO BE DETERMINED BY THE BUILDER.

BRG. HT. LEGEND

20'-8" BRG. HT. 2-HR. FIREWALL (UL 905)

21'-4" BRG. HT. 2-HR. FIREWALL (UL 905)

NOTE:
EXTEND UL 373 ASSEMBLY TO UNDERSIDE OF ROOF DECKING

Second Floor Overall

SCALE: 1/4" = 1'-0"

THOMPSON ENGINEERING GROUP, INC.
4401 Vineland Road Suite #J Orlando, FL 32811
Ph: (407) 734-1450
Fax: (407) 734-1790
www.teg-fl.com

MJS designers group
residential-commercial-architecture
815 Orienta Ave., Suite #1040
Altamonte Springs, Fl. 32701
Ph: (407) 629-6711
Fax: (407) 629-6776
www.mjsdesignersgroup.com

AIBD

GOBA
GREATER ORLANDO BUILDERS ASSOCIATION

5-Unit: Rear Load Detached

Models: Tyler, Jackson, Grant, Jackson & Monroe

Building Pad #XX
Lot# XX-XX, Subdivision
Street Address
City, State, Zip Code

A division of Park Square Enterprises Inc.
5200 Vineland Rd. Suite #200
Orlando, Fl. 32811
Phone: (407) 529-3000

Park Square HOMES

ISSUE DATE	02/14/2023
REVISIONS	
PROJECT:	22-1148
SCALE:	AS NOTED
DRAWN BY:	C.C.
DESIGNED BY:	MJS

SECOND FLOOR
A3

Carlos V:\Park Square Homes\MODELS\TOWNHOME MODELS\Townhomes (Orlando)\1- Townhome Models\Rear Load Detached Towns (Raised Heel)\5-Unit\A3 Second Floor Overall.dwg
Jul 26, 2023,9:11am

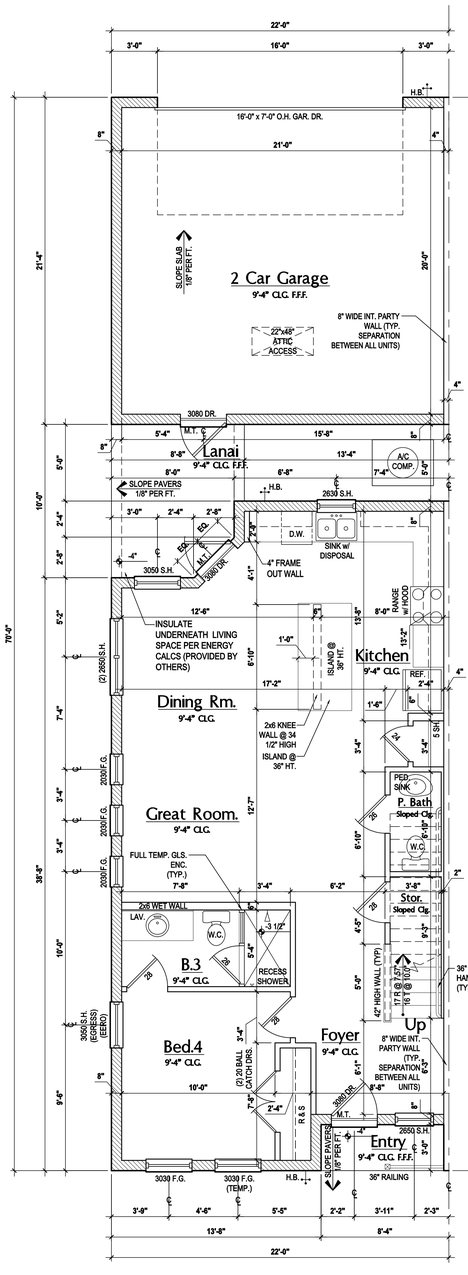

Tyler: First Floor

SCALE: 1/4" = 1'-0"

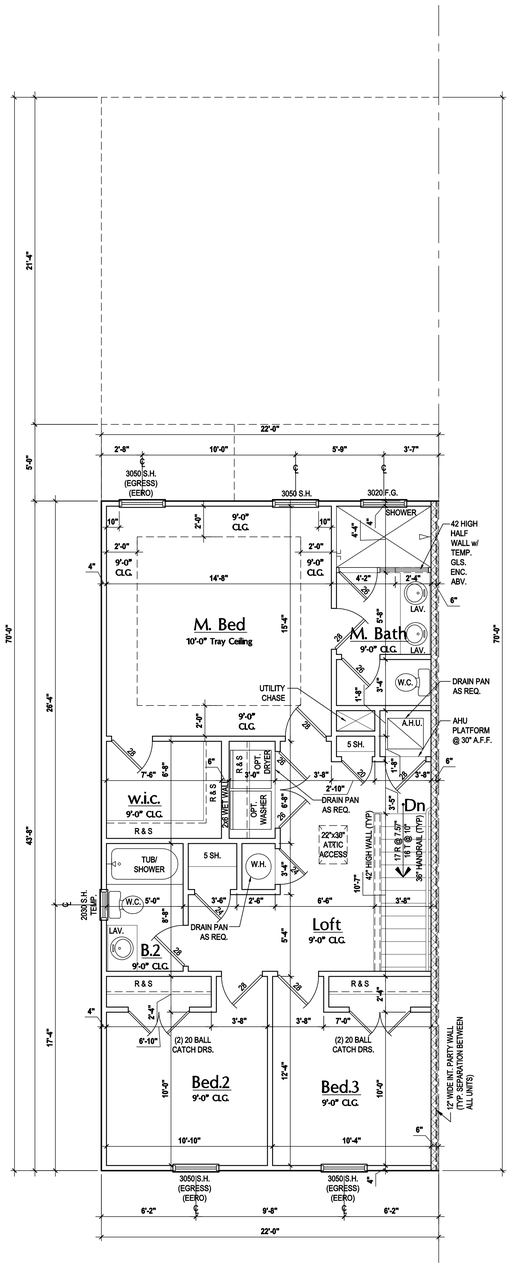

Tyler: Second Floor

SCALE: 1/4" = 1'-0"

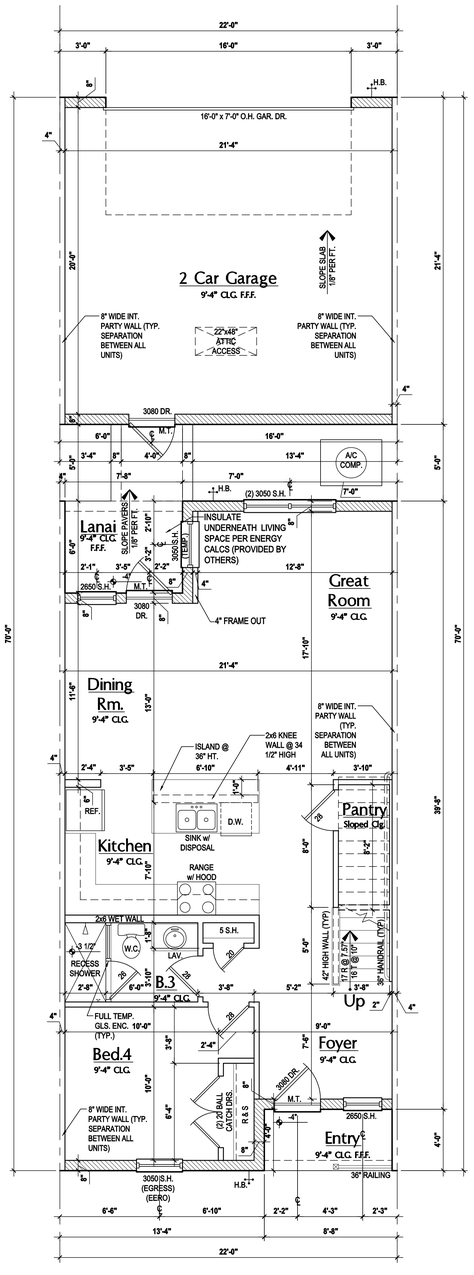

Jackson: First Floor

SCALE: 1/4" = 1'-0"

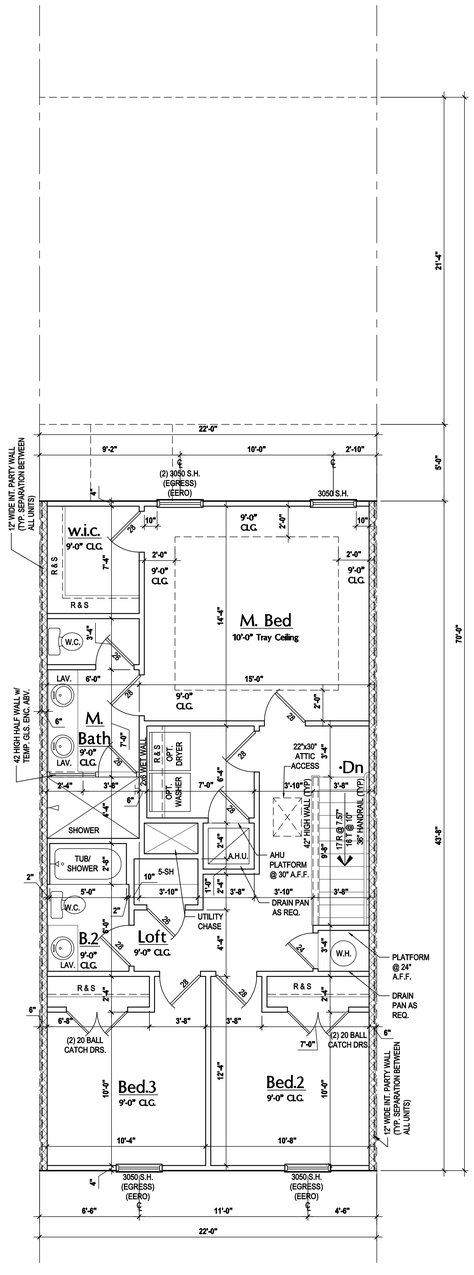

Jackson: Second Floor

SCALE: 1/4" = 1'-0"

Area Tabulations

Living:	Tyler Unit
1st floor:	899 sf
2nd floor:	906 sf
Total Living:	1,805 sf
entry:	24 sf
garage:	469 sf
lanai:	80 sf
Total Area:	2,378 sf

Floor Plan

SCALE: 1/4" = 1'-0"

GENERAL NOTES KEY:

ABBREVIATIONS:

MT - METAL THRESHOLD	TEMP - TEMPERED GLASS
FR - FRENCH DOORS	SH - SINGLE HUNG
SL - SIDE LIGHT	DH - DOUBLE HUNG
FG - FIXED GLASS	CSMT- CASEMENT
TR - TRANSOM	HR - HORIZONTAL ROLLER
GB - GLASS BLOCK	BP - BYPASS
PKT - POCKET DOOR	BF - BIFOLD
SVC - SERVICE DOOR	TYP. - TYPICAL
OBS - OBSCURED GLASS	

NOTES:

1. CONTRACTOR TO VERIFY ALL DIMENSIONS ON JOB SITE.
2. DO NOT SCALE PRINTS! CONSTRUCTION TO BE FROM CALCULATED DIMENSIONS ONLY. ANY DISCREPANCIES OR ERRORS TO BE REPORTED PROMPTLY TO SUPERVISOR FOR CLARIFICATION.
3. MECHANICAL EQUIP. LOCATIONS WILL BE DETERMINED BY COMMUNITY AND COUNTY CODES.
4. A/C CONDENSER UNIT TO BE ANCHORED TO SLAB PER CODE M307.2 & M1309.3.
5. PROVIDE RECESS H&C WATER W/ DRAIN @ WASHER SPACE.
6. VENT DRYER THRU EXTERIOR WALL U.N.O.
7. PROVIDE COLD WATER LINE FOR ICE MAKER LINE @ REF. SPACE.
8. PROVIDE RECESS H&C WATER W/ DRAIN @ WASHER SPACE.
9. SAG RESISTANT DRYWALL ON ALL CEILINGS.
10. PULL ALL DIMENSIONS FROM THE REAR OF PLAN.
11. REFER TO EXTERIOR ELEVATIONS & TYP. DETAIL SHEETS FOR EXTERIOR WALL FINISH SPEC'S.
12. REFER TO DETAIL SHEETS FOR FLASHING REQUIREMENTS AT ALL WOOD TO MASONRY INTERFACES.
13. ALL INTERIOR FRAME WALL DIMENSIONS TO BE 3 $\frac{1}{2}$" U.N.O.
14. ALL EXTERIOR BLOCK WALL DIMENSIONS TO BE 7 $\frac{1}{2}$" U.N.O.
15. C.M.U. & FRAME WALL SYSTEM SEGMENTS WHICH HAVE AN UNINTERRUPTED LENGTH OF 12'-0" OR MORE SHALL BE CONSIDERED SHEAR WALL SWS = SHEAR WALL SEGMENTS.
16. THE GARAGE SHALL BE SEPARATED AS REQUIRED BY TABLE R302.6. OPENINGS IN GARAGE WALLS SHALL COMPLY WITH SECTION R302.5. ATTACHMENT OF GYPSUM BOARD SHALL COMPLY WITH TABLE R702.3.5. THE WALL SEPARATION PROVISIONS OF TABLE R302.6 SHALL NOT APPLY TO GARAGE WALLS THAT ARE PERPENDICULAR TO THE ADJACENT DWELLING UNIT WALL.
17. ENCLOSED SPACE UNDER STAIRS THAT IS ACCESSED BY A DOOR OR ACCESS PANEL SHALL HAVE WALLS, UNDER-STAIR SURFACE AND ANY SOFFITS PROTECTED ON THE ENCLOSED SIDE WITH 1/2-INCH (12.7 MM) GYPSUM BOARD.
18. GARAGE DOOR TO BE CERTIFIED BY MFR. FOR MIN. 140 M.P.H.
19. ALL TUB & SHOWER UNITS WILL HAVE ANTI-SCALDING DEVICES INSTALLED.
20. ALL OPERABLE WINDOWS LOCATED MORE THAN 72" ABV. SURFACE BELOW SHALL HAVE THE LOWEST PORTION OF WINDOW CLEAR OPENING A MIN. OF 24" ABOVE FINISHED FLOOR BEING SERVER PER (FBC-R312.2).
21. ALL INT. DOORS TO BE 6'-8" TALL U.N.O. OR PER BUILDER / CLIENT.
22. SPECIALTY WINDOWS/DOORS, FIXED GLASS WINDOWS, AND TRANSOMS ARE NOTED ON PLANS.
23. ALL DOORS & WINDOWS THAT ARE EGRESS WILL BE LABELED AS SUCH AND CONFORM TO FBC R310.2 EERO
24. SOIL TESTING IS RECOMMENDED, BUT IS NOT REQUIRED. THE DESIGN TEAM AT MJS & E.O.R STRONGLY RECOMMEND A SOIL TEST TO CONFIRM SOIL BEARING CAPACITY AND SURFACE GEO-TECHNICAL CONDITIONS. FOOTINGS SHALL BEAR ON UNDISTURBED SOIL A/O PROPERLY COMPACTED FILL (2000 PSF MIN.). FILL MATERIAL SHALL BE COMPACTED TO 95% DENSITY OF A STANDARD PROCTOR. TO BE VERIFIED BY GENERAL CONTRACTOR / OWNER.
25. OPENING BETWEEN GARAGE AND RESIDENCE SHALL BE EQUIPPED WITH A 20 MIN. FIRE RATED SOLID WOOD OR HONEYCOMB CORE STEEL DOOR NOT LESS THAN 1 3/8" THICKNESS AS PER FBC-R302.5.1.
26. 1/2" GYPSUM BOARD APPLIED TO THE GARAGE SIDE OF WALL TO UNDERSIDE OF DECKING.
27. 5/8" TYPE X DRYWALL ON GARAGE CEILING BELOW ANY HABITABLE SPACE

WINDOW / DOOR NOTE KEY:

WINDOW SIZE CALLOUT:
2040 = 2'-0" x 4'-0"
2050 = 2'-0" x 5'-0"
2060 = 2'-0" x 6'-0"
- ALL WINDOW CALLOUTS ARE MEASURED IN FEET & INCHES AS PER THE EXAMPLE TABLE ABOVE.

DOOR SIZE CALLOUT:

20 = 2'-0"	40 B.F. = 4'-0" BI-FOLD
24 = 2'-4"	50 B.F. = 5'-0" BI-FOLD
26 = 2'-6"	60 B.F. = 6'-0" BI-FOLD
28 = 2'-8"	
30 = 3'-0"	

- ALL INTERIOR DOOR HEIGHTS ARE TO BE DETERMINED BY THE BUILDER.

BRG. HT. LEGEND

20'-8" BRG. HT. 2-HR. FIREWALL (UL 905)

21'-4" BRG. HT. 2-HR. FIREWALL (UL 905)

NOTE: EXTEND UL 373 ASSEMBLY TO UNDERSIDE OF ROOF DECKING

Area Tabulations

Living:	Jackson Unit
1st floor:	878 sf
2nd floor:	906 sf
Total Living:	1,784 sf
entry:	35 sf
garage:	469 sf
lanai:	75 sf
Total Area:	2,363 sf

Floor Plan

SCALE: 1/4" = 1'-0"

TEG
THOMPSON ENGINEERING GROUP, INC.
4401 Vineland Road Suite A6 Orlando, FL 32811
Phone: (407) 704-0467
Fax: (407) 734-1790
www.teglf.com

MJS designers group
815 Orienta Ave., Suite #1040
Altamonte Springs, Fl. 32701
Ph: (407) 629-6711
Fax: (407) 629-6776
www.mjsdesignersgroup.com
residential-commercial-architecture

AIBD
GOBA

5-Unit: Rear Load Detached

Models: Tyler, Jackson, Grant, Jackson & Monroe

Building Pad #XX
Lot# XX-XX, Subdivision
Street Address
City, State, Zip Code

A division of Park Square Enterprises Inc.
5200 Vineland Rd. Suite #200
Orlando, Fl. 32811
Phone: (407) 529-3000

Park Square HOMES

ISSUE DATE	02/14/2023
REVISIONS	
PROJECT:	22-1148
SCALE:	AS NOTED
DRAWN BY:	C.C.
DESIGNED BY:	MJS

FLOOR PLANS
A4

Jul 26, 2023,9:12am CarlosV:\Park Square Homes\MODELS\TOWNHOME MODELS\Townhomes (Orlando)\1- Townhome Models\Rear Load Detached Towns (Ribbed Hell)\5-Unit\A4 Floor Plans (Tyler)(Jackson).dwg

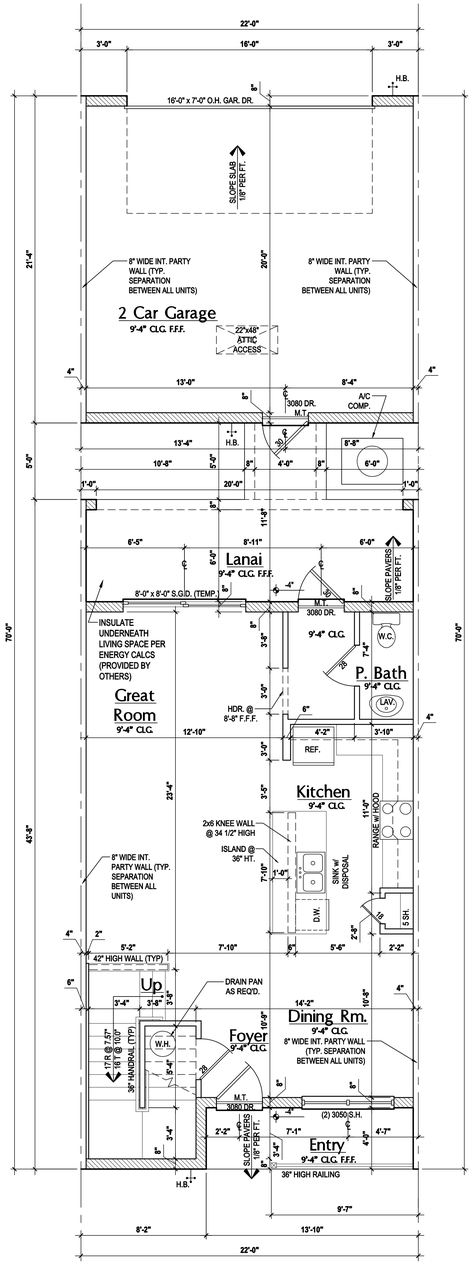

Grant: First Floor Plan

SCALE: 1/4" = 1'-0"

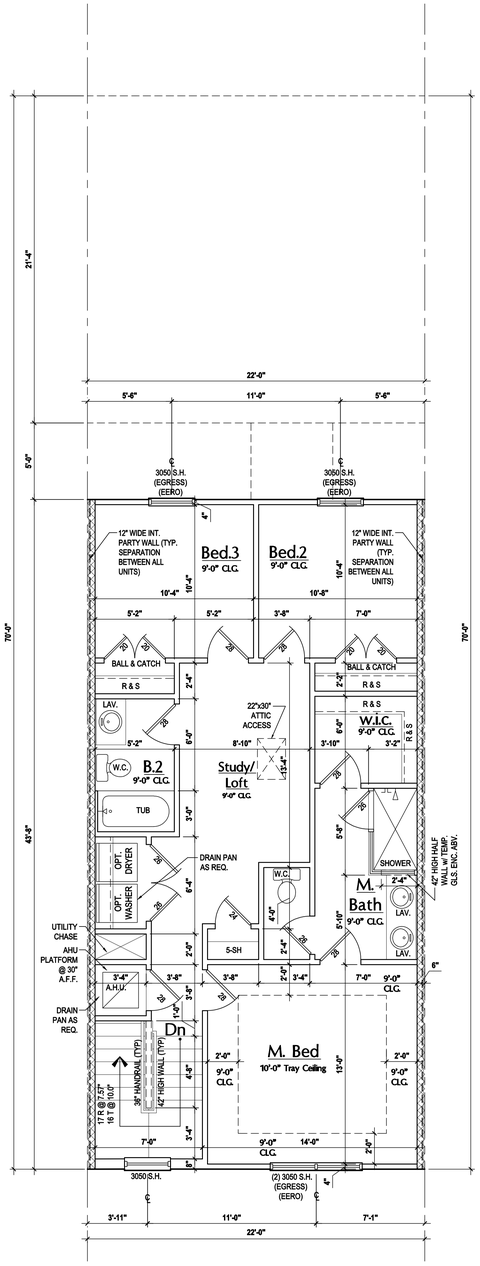

Grant: Second Floor Plan

SCALE: 1/4" = 1'-0"

Area Tabulations

Living:	Grant Unit
1st floor:	759 sf
2nd floor:	879 sf
Total Living:	1,638 sf
entry:	55 sf
garage:	469 sf
lanai:	173 sf
Total Area:	2,335 sf

Floor Plan

SCALE: 1/4" = 1'-0"

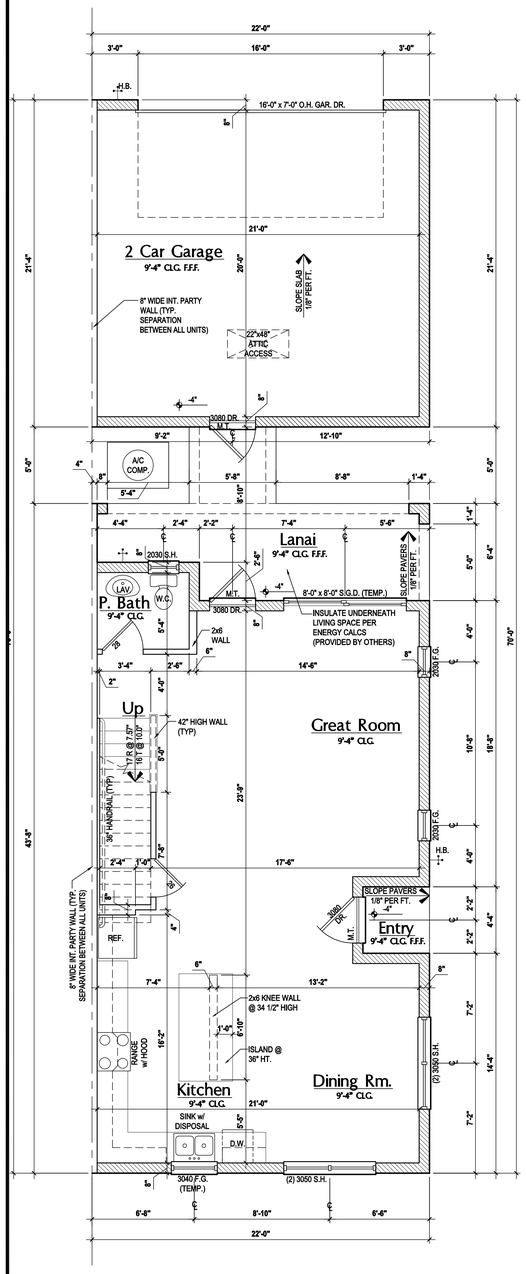

Monroe: First Floor Plan

SCALE: 1/4" = 1'-0"

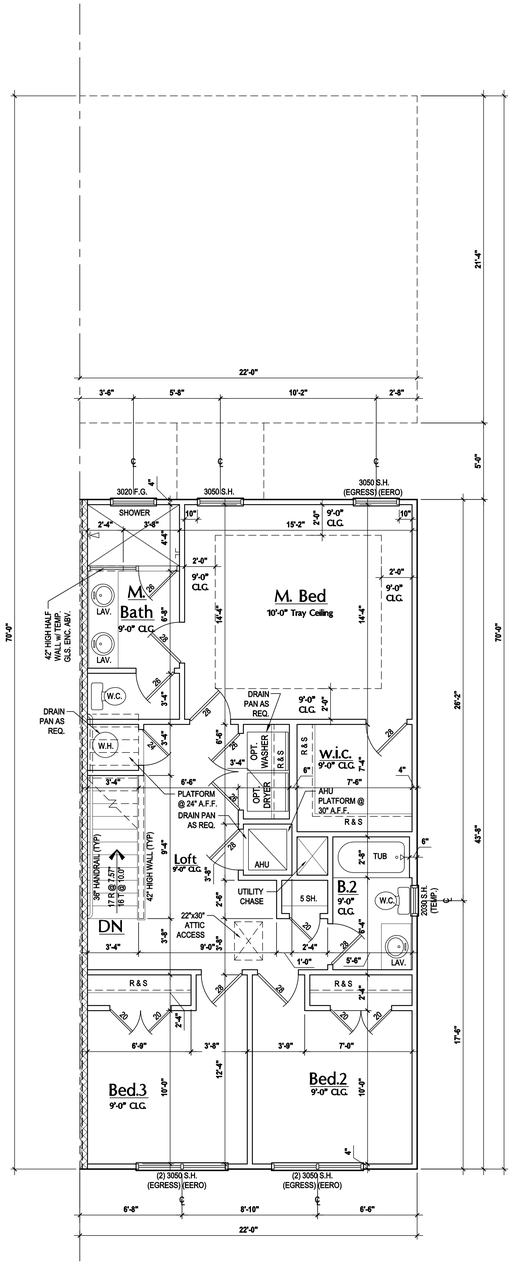

Monroe: Second Floor Plan

SCALE: 1/4" = 1'-0"

Area Tabulations

Living:	Monroe Unit
1st floor:	820 sf
2nd floor:	912 sf
Total Living:	1,732 sf
entry:	19 sf
garage:	469 sf
lanai:	126 sf
Total Area:	2,346 sf

Floor Plan

SCALE: 1/4" = 1'-0"

GENERAL NOTES KEY:

ABBREVIATIONS:

MT - METAL THRESHOLD	TEMP - TEMPERED GLASS
FR - FRENCH DOORS	SH - SINGLE HUNG
SL - SIDE LIGHT	DH - DOUBLE HUNG
FG - FIXED GLASS	CSMT- CASEMENT
TR - TRANSOM	HR - HORIZONTAL ROLLER
GB - GLASS BLOCK	BP - BYPASS
PKT - POCKET DOOR	BF - BIFOLD
SVC - SERVICE DOOR	TYP. - TYPICAL
OBS - OBSCURED GLASS	

NOTES:

1. CONTRACTOR TO VERIFY ALL DIMENSIONS ON JOB SITE.
2. DO NOT SCALE PRINTS! CONSTRUCTION TO BE FROM CALCULATED DIMENSIONS ONLY. ANY DISCREPANCIES OR ERRORS TO BE REPORTED PROMPTLY TO SUPERVISOR FOR CLARIFICATION.
3. MECHANICAL EQUIP. LOCATIONS WILL BE DETERMINED BY COMMUNITY AND COUNTY CODES.
4. A/C CONDENSER UNIT TO BE ANCHORED TO SLAB PER CODE M307.2 & M1309.3.
5. PROVIDE RECESS H&C WATER W/ DRAIN @ WASHER SPACE.
6. VENT DRYER THRU EXTERIOR WALL U.N.O.
7. PROVIDE COLD WATER LINE FOR ICE MAKER LINE @ REF. SPACE.
8. PROVIDE RECESS H&C WATER W/ DRAIN @ WASHER SPACE.
9. SAG RESISTANT DRYWALL ON ALL CEILINGS.
10. PULL ALL DIMENSIONS FROM THE REAR OF PLAN.
11. REFER TO EXTERIOR ELEVATIONS & TYP. DETAIL SHEETS FOR EXTERIOR WALL FINISH SPEC'S.
12. REFER TO DETAIL SHEETS FOR FLASHING REQUIREMENTS AT ALL WOOD TO MASONRY INTERFACES.
13. ALL INTERIOR FRAME WALL DIMENSIONS TO BE 3 5/8" U.N.O.
14. ALL EXTERIOR BLOCK WALL DIMENSIONS TO BE 7 5/8" U.N.O.
15. C.M.U. & FRAME WALL SYSTEM SEGMENTS WHICH HAVE AN UNINTERRUPTED LENGTH OF 12'-0" OR MORE SHALL BE CONSIDERED SHEAR WALL SWS = SHEAR WALL SEGMENTS.
16. THE GARAGE SHALL BE SEPARATED AS REQUIRED BY TABLE R302.6. OPENINGS IN GARAGE WALLS SHALL COMPLY WITH SECTION R302.5. ATTACHMENT OF GYPSUM BOARD SHALL COMPLY WITH TABLE R702.3.5. THE WALL SEPARATION PROVISIONS OF TABLE R302.6 SHALL NOT APPLY TO GARAGE WALLS THAT ARE PERPENDICULAR TO THE ADJACENT DWELLING UNIT WALL.
17. ENCLOSED SPACE UNDER STAIRS THAT IS ACCESSED BY A DOOR OR ACCESS PANEL SHALL HAVE WALLS, UNDER-STAIR SURFACE AND ANY SOFFITS PROTECTED ON THE ENCLOSED SIDE WITH 1/2-INCH (12.7 MM) GYPSUM BOARD.
18. GARAGE DOOR TO BE CERTIFIED BY MFR. FOR MIN. 140 M.P.H.
19. ALL TUB & SHOWER UNITS WILL HAVE ANTI-SCALDING DEVICES INSTALLED.
20. ALL OPERABLE WINDOWS LOCATED MORE THAN 72" ABV. SURFACE BELOW SHALL HAVE THE LOWEST PORTION OF WINDOW CLEAR OPENING A MIN. OF 24" ABOVE FINISHED FLOOR BEING SERVER PER (FBC-R312.2).
21. ALL INT. DOORS TO BE 6'-8" TALL U.N.O. OR PER BUILDER / CLIENT.
22. SPECIALTY WINDOWS/DOORS, FIXED GLASS WINDOWS, AND TRANSOMS ARE NOTED ON PLANS.
23. ALL DOORS & WINDOWS THAT ARE EGRESS WILL BE LABELED AS SUCH AND CONFORM TO FBC R310.2 EERO
24. SOIL TESTING IS RECOMMENDED, BUT IS NOT REQUIRED. THE DESIGN TEAM AT MJS & E.O.R STRONGLY RECOMMEND A SOIL TEST TO CONFIRM SOIL BEARING CAPACITY AND SURFACE GEO-TECHNICAL CONDITIONS. FOOTINGS SHALL BEAR ON UNDISTURBED SOIL A/O PROPERLY COMPACTED FILL (2000 PSF MIN.). FILL MATERIAL SHALL BE COMPACTED TO 95% DENSITY OF A STANDARD PROCTOR. TO BE VERIFIED BY GENERAL CONTRACTOR / OWNER.
25. OPENING BETWEEN GARAGE AND RESIDENCE SHALL BE EQUIPPED WITH A 20 MIN. FIRE RATED SOLID WOOD OR HONEYCOMB CORE STEEL DOOR NOT LESS THAN 1 3/8" THICKNESS AS PER FBC-R302.5.1.
26. 1/2" GYPSUM BOARD APPLIED TO THE GARAGE SIDE OF WALL TO UNDERSIDE OF DECKING.
27. 5/8" TYPE X DRYWALL ON GARAGE CEILING BELOW ANY HABITABLE SPACE

WINDOW / DOOR NOTE KEY:

WINDOW SIZE CALLOUT:
2040 = 2'-0" x 4'-0"
2050 = 2'-0" x 5'-0"
2060 = 2'-0" x 6'-0"
• ALL WINDOW CALLOUTS ARE MEASURED IN FEET & INCHES AS PER THE EXAMPLE TABLE ABOVE.

DOOR SIZE CALLOUT:

20 = 2'-0"	40 B.F. = 4'-0" BI-FOLD
24 = 2'-4"	50 B.F. = 5'-0" BI-FOLD
26 = 2'-6"	60 B.F. = 6'-0" BI-FOLD
28 = 2'-8"	
30 = 3'-0"	

• ALL INTERIOR DOOR HEIGHTS ARE TO BE DETERMINED BY THE BUILDER.

BRG. HT. LEGEND

20'-8" BRG. HT. 2-HR. FIREWALL (UL 905)

21'-4" BRG. HT. 2-HR. FIREWALL (UL 905)

NOTE: EXTEND UL 373 ASSEMBLY TO UNDERSIDE OF ROOF DECKING

THOMPSON ENGINEERING GROUP, INC.
4401 Vineland Road Suite A5 Orlando, FL 32811
Ph: (407) 734-1450
Fax: (407) 734-1790
www.teg4.com

815 Orienta Ave., Suite #1040
Altamonte Springs, Fl. 32701
Ph: (407) 629-6711
Fax: (407) 629-6776
www.mjsdesignersgroup.com

MJS designers group
residential-commercial-architecture

ALL BD

GOBA GREATER ORLANDO BUILDERS ASSOCIATION

5-Unit: Rear Load Detached

Models: Tyler, Jackson, Grant, Jackson & Monroe

Building Pad #XX
Lot# XX-XX, Subdivision
Street Address
City, State. Zip Code

A division of Park Square Enterprises Inc.
5200 Vineland Rd. Suite #200
Orlando, Fl. 32811
Phone: (407) 529-3000

Park Square HOMES

ISSUE DATE	02/14/2023
REVISIONS	
PROJECT:	22-1148
SCALE:	AS NOTED
DRAWN BY:	C.C.
DESIGNED BY:	MJS

FLOOR PLANS
A5

Carlos V:\Park Square Homes\MODELS\TOWNHOME MODELS\Townhomes (Orlando)\1-Townhome Models\Rear Load Detached Towns (Raised Heel)\5-Unit\A5 Floor Plans (Grant)\(Monroe).dwg Jul 26, 2023,9:12am

Front Elevation "A"

SCALE: 3/16" = 1'-0"

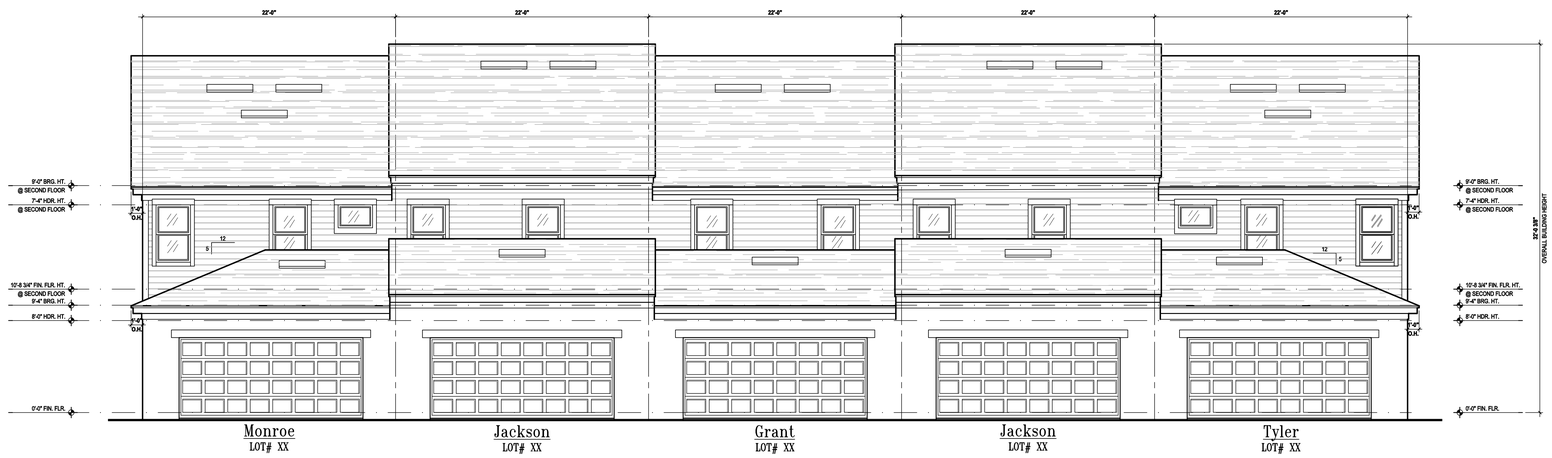

Rear Elevation

SCALE: 3/16" = 1'-0"

Rear Elevation: Courtyard

SCALE: 3/16" = 1'-0"

THOMPSON ENGINEERING GROUP, INC.
4401 Vineland Road Suite A6 Orlando, FL 32811
Ph: (407) 734-1790
Fax: (407) 734-1790
www.tegfl.com

815 Orienta Ave., Suite #1040
Altamonte Springs, Fl. 32701
Ph: (407) 629-6711
Fax: (407) 629-6776
www.mjsdesignersgroup.com

MJS designers group
residential-commercial-architecture

AIBD

GOBA GREATER ORLANDO BUILDERS ASSOCIATION

5-Unit: Rear Load Detached

Models: Tyler, Jackson, Grant, Jackson & Monroe

Building Pad #XX
Lot# XX-XX, Subdivision
Street Address
City, State, Zip Code

A division of Park Square Enterprises Inc.
5200 Vineland Rd. Suite #200
Orlando, Fl. 32811
Phone: (407) 529-3000

Park Square HOMES

ISSUE DATE	02/14/2023
REVISIONS	
PROJECT:	22-1148
SCALE:	AS NOTED
DRAWN BY:	C.C.
DESIGNED BY:	MJS

ELEVATIONS
A6

Jul 28, 2023,9:12am Carlos V:\Park Square Homes\MODELS\TOWNHOME MODELS\Townhomes (Orlando)\1- Townhome Models\Rear Load Detached Towns (Raised Heel)\5-Unit\A6 Ext. Elevations- (ELEV A).dwg

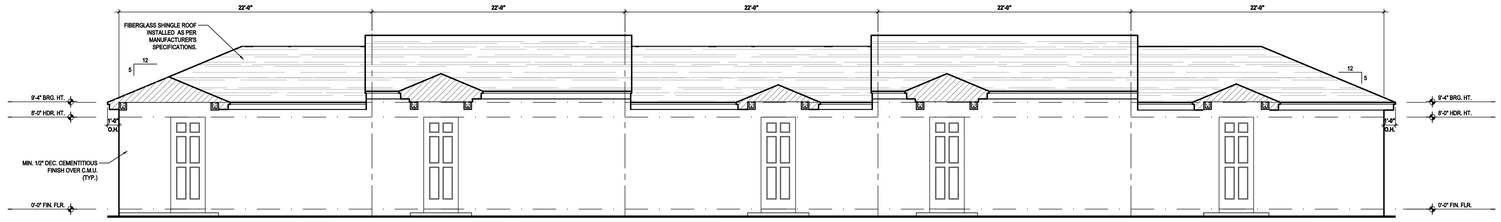

Tyler
LOT# XX

Jackson
LOT# XX

Grant
LOT# XX

Jackson
LOT# XX

Monroe
LOT# XX

Front Elevation: Garage

SCALE: 3/16" = 1'-0"

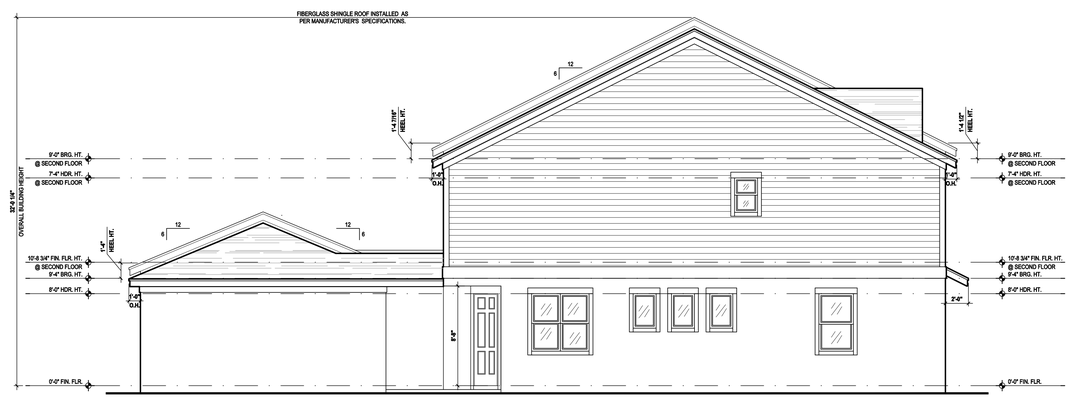

Tyler
LOT# XX

Left Elevation

SCALE: 3/16" = 1'-0"

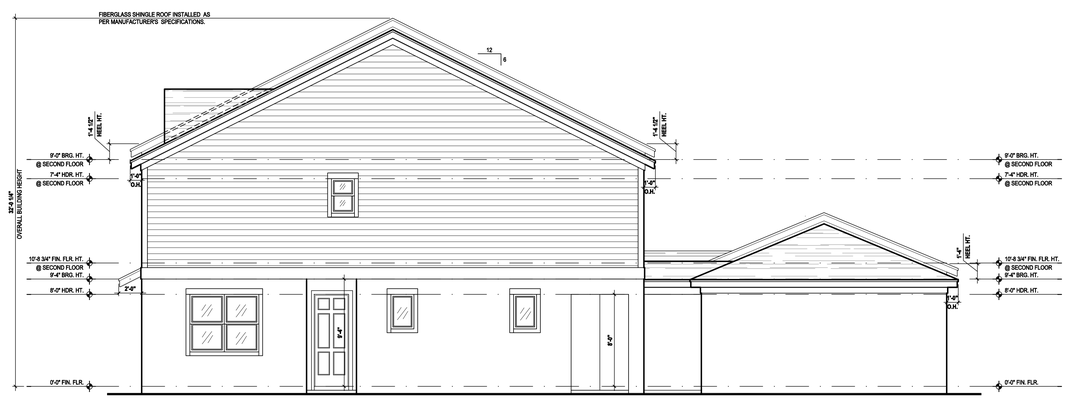

Monroe
LOT# XX

Right Elevation

SCALE: 3/16" = 1'-0"

THOMPSON ENGINEERING GROUP, INC.
4401 Vineland Road Suite A6 Orlando, FL 32811
Ph: (407) 734-1450
Fax: (407) 734-1790
www.teg-fl.com

MJS designers group
residential-commercial-architecture
815 Orienta Ave., Suite #1040
Altamonte Springs, Fl. 32701
Ph: (407) 629-6711
Fax: (407) 629-6776
www.mjsdesignersgroup.com

ALBD

GOBA GREATER ORLANDO BUILDERS ASSOCIATION

5-Unit: Rear Load Detached

Models: Tyler, Jackson, Grant, Jackson & Monroe

Building Pad #XX
Lot# XX-XX, Subdivision
Street Address
City, State, Zip Code

A division of Park Square Enterprises Inc.
5200 Vineland Rd. Suite #200
Orlando, Fl. 32811
Phone: (407) 529-3000

Park Square HOMES

ISSUE DATE	02/14/2023

REVISIONS

PROJECT:	22-1148
SCALE:	AS NOTED
DRAWN BY:	C.C.
DESIGNED BY:	MJS

ELEVATIONS
A7

Jul 26, 2023,9:12am CarlOs V:\Park Square Homes\MODELS\TOWNHOME MODELS\Townhomes (Orlando)\1- Townhome Models\Rear Load Detached Towns (Raised Heel)\5-Unit\A7 Ext. Elevations- (ELEV A).dwg

Front Elevation "B"

SCALE: 3/16" = 1'-0"

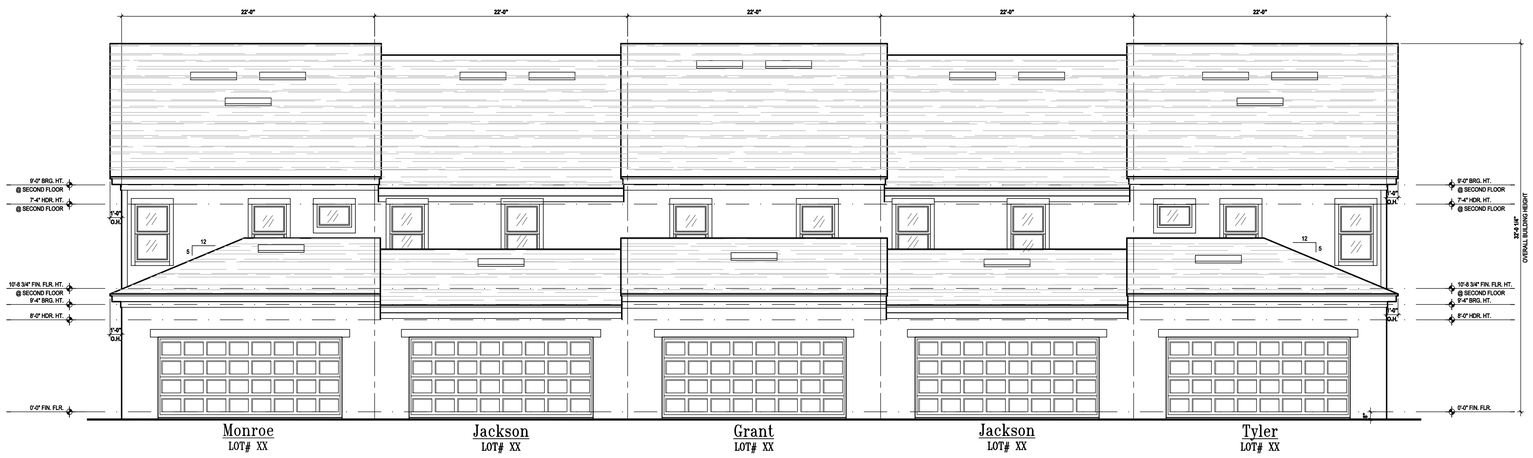

Rear Elevation

SCALE: 3/16" = 1'-0"

Rear Elevation: Courtyard

SCALE: 3/16" = 1'-0"

THOMPSON ENGINEERING GROUP, INC.
4401 Vineland Road Suite A6 Orlando, FL 32811
Ph: (407) 734-1790
Fax: (407) 734-1790
www.teg8.com

815 Orienta Ave., Suite #1040
Altamonte Springs, Fl. 32701
Ph: (407) 629-6711
Fax: (407) 629-6776
www.mjsdesignersgroup.com

MJS designers group
residential-commercial-architecture

A | B D

GOBA
GREATER ORLANDO BUILDERS ASSOCIATION

5-Unit: Rear Load Detached

Models: Tyler, Jackson, Grant, Jackson & Monroe

Building Pad #XX
Lot# XX-XX, Subdivision
Street Address:
City, State, Zip Code

A division of Park Square Enterprises Inc.
5200 Vineland Rd. Suite #200
Orlando, Fl. 32811
Phone: (407) 529-3000

Park Square HOMES

ISSUE DATE	02/14/2023
REVISIONS	
PROJECT:	22-1148
SCALE:	AS NOTED
DRAWN BY:	C.C.
DESIGNED BY:	MJS

ELEVATIONS
A8

Jul 26, 2023,9:12am Carlos V:\Park Square Homes\MODELS\TOWNHOME MODELS\Townhomes (Orlando)\1- Townhome Models\Rear Load Detached Towns (Raised Heel)\5-Unit\A8 Ext. Elevations - (ELEV B).dwg

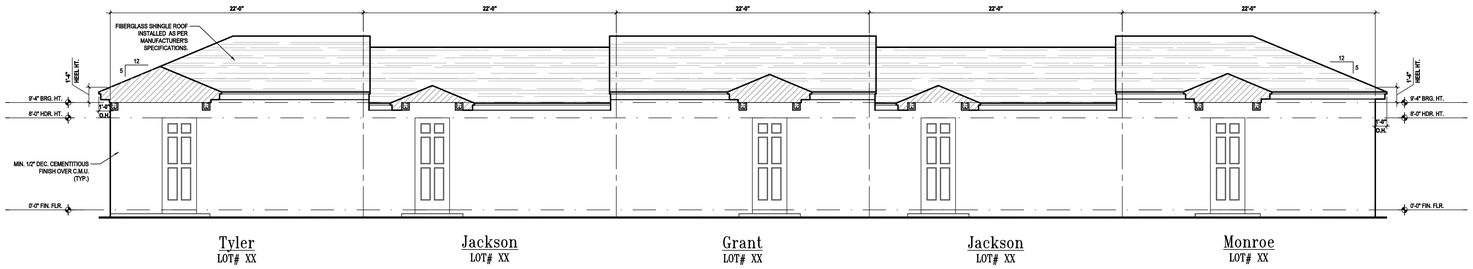

Front Elevation: Garage

SCALE: 3/16" = 1'-0"

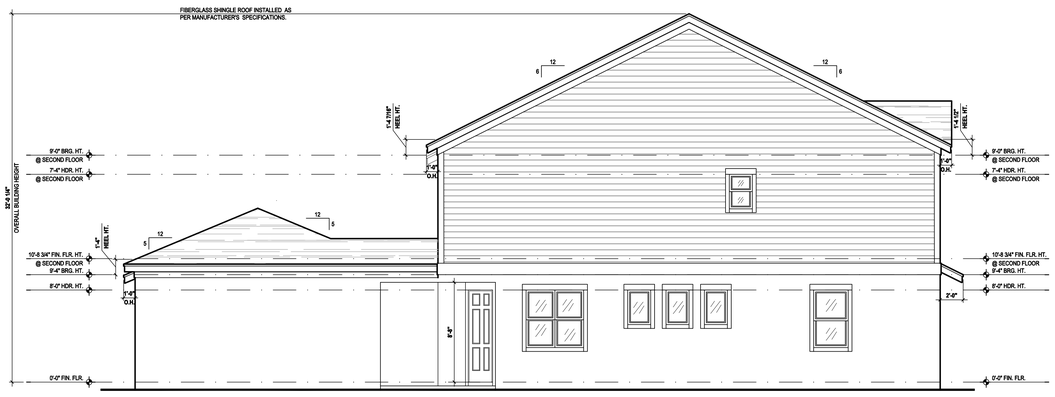

Left Elevation

SCALE: 3/16" = 1'-0"

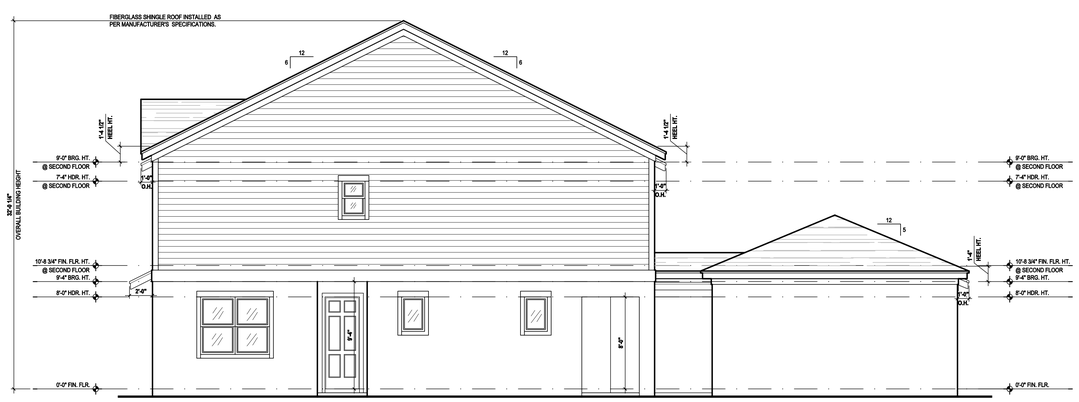

Right Elevation

SCALE: 3/16" = 1'-0"

THOMPSON ENGINEERING GROUP, INC.
4401 Vineland Road Suite A6 Orlando, FL 32811
Ph: (407) 734-1450
Fax: (407) 734-1790
www.teg.com

815 Orienta Ave., Suite #1040
Altamonte Springs, Fl. 32701
Ph: (407) 629-6711
Fax: (407) 629-6776
www.mjsdesignersgroup.com

MJS designers group
residential-commercial-architecture

AIBD

GOBA
GREATER ORLANDO BUILDERS ASSOCIATION

5-Unit: Rear Load Detached

Models: Tyler, Jackson, Grant, Jackson & Monroe

Building Pad #XX
Lot# XX-XX, Subdivision
Street Address
City, State. Zip Code

A division of Park Square Enterprises Inc.
5200 Vineland Rd. Suite #200
Orlando, Fl. 32811
Phone: (407) 529-3000

ISSUE DATE	02/14/2023
REVISIONS	
PROJECT:	22-1148
SCALE:	AS NOTED
DRAWN BY:	C.C.
DESIGNED BY:	MJS

ELEVATIONS
A9

Cartos V:\Park Square Homes\MODELS\TOWNHOME MODELS\Townhomes (Orlando)\1-Townhome Models\Rear Load Detached Towns (Raised Heel)\5-Unit\A9 Ext. Elevations- (ELEV B).dwg
Jul 26, 2023,9:12am

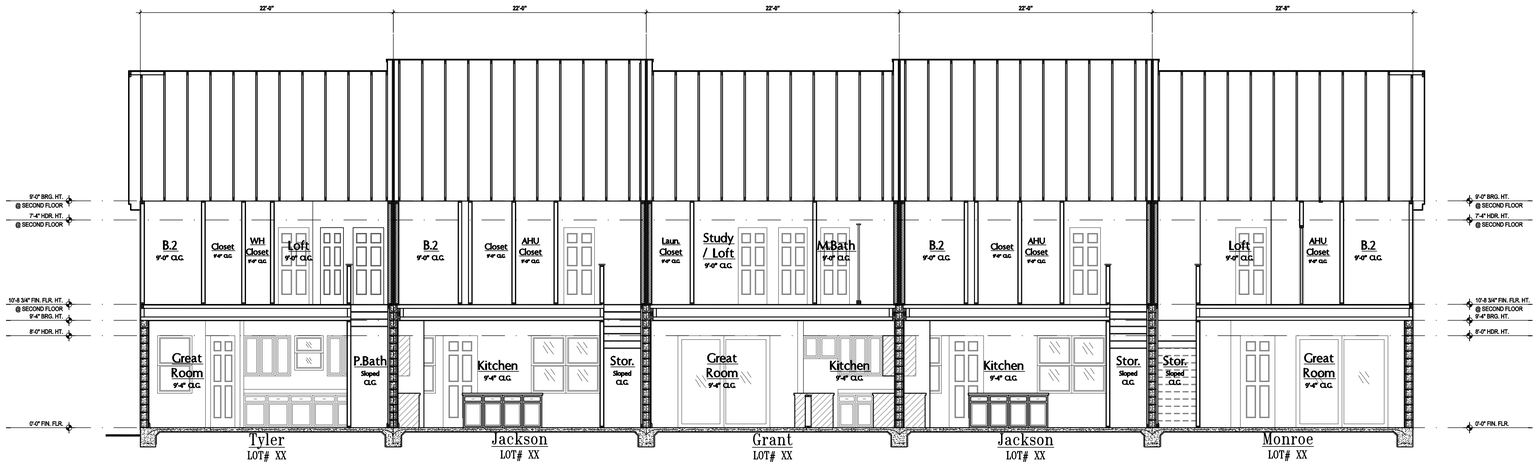

1 / A10 Elevation "A": Building Section

SCALE: 3/16" = 1'-0"

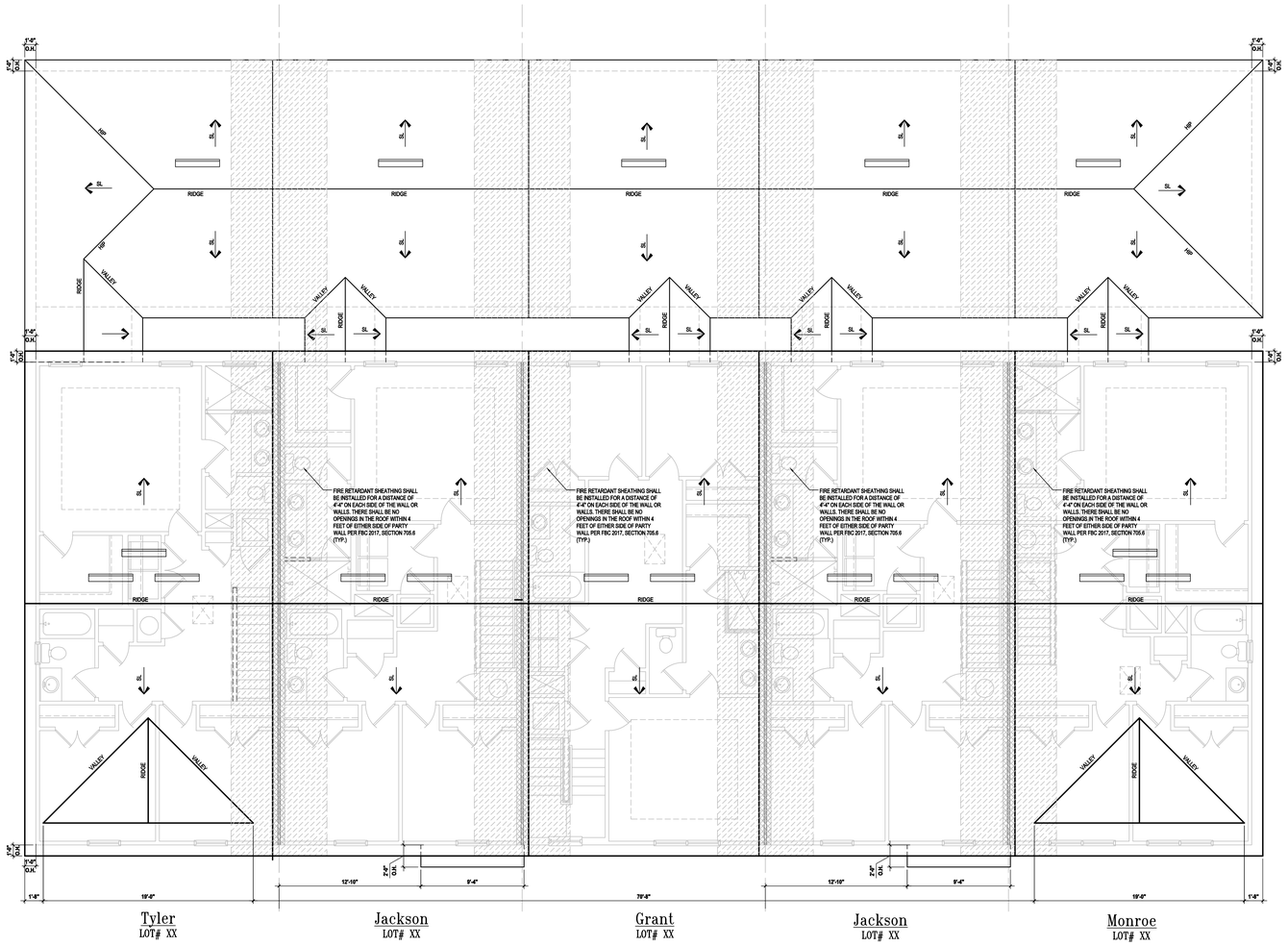

Elevation "A": Roof Layout

(Standard)

SCALE: 3/16" = 1'-0"

TYLER UNIT ATTIC VENT CALC'S.

MAIN AV VOLUME ROOF AREA: 1,077 SQ. FT.
=(1,077/300) = 3.59 SQ. FT. / 2 = 1.795 SQ. FT.
1.795 x 144 = 258.48 SQ. IN.
258.48 SQ. IN / 98.75" = 2.61 VENTS NEEDED

AV REQUIRED: (3) VENTS NEEDED

GARAGE AV VOLUME ROOF AREA: 550 SQ. FT.
=(550/300) = 1.83 SQ. FT. / 2 = .916 SQ. FT.
.916 x 144 = 132 SQ. IN.
132 SQ. IN / 98.75" = 1.33 VENTS NEEDED

AV REQUIRED: (1) VENTS NEEDED

2020 FLORIDA BUILDING CODE (7TH EDITION) SECTION R806 (OFF-RIDGE VENT MAXIMUM OPENING SIZES)

JACKSON UNIT ATTIC VENT CALC'S.

MAIN AV VOLUME ROOF AREA: 951 SQ. FT.
= (951/300) = 3.17 SQ. FT. / 2 = 1.585 SQ. FT.
1.585 x 144 = 228.24 SQ. IN.
228.24 SQ. IN / 98.75" = 2.31 VENTS NEEDED

AV REQUIRED: (2) VENTS NEEDED

GARAGE AV VOLUME ROOF AREA: 486 SQ. FT.
= (486/300) = 1.62 SQ. FT. / 2 = .81 SQ. FT.
.81 x 144 = 116.64 SQ. IN.
116.64 SQ. IN / 98.75" = 1.18 VENTS NEEDED

AV REQUIRED: (1) VENTS NEEDED

2020 FLORIDA BUILDING CODE (7TH EDITION) SECTION R806 (OFF-RIDGE VENT MAXIMUM OPENING SIZES)

GRANT UNIT ATTIC VENT CALC'S.

MAIN AV VOLUME ROOF AREA: 1,056 SQ. FT.
= (1,056/300) = 3.52 SQ. FT. / 2 = 1.76 SQ. FT.
1.76 x 144 = 253.44 SQ. IN.
253.44 SQ. IN / 98.75" = 2.56 VENTS NEEDED

AV REQUIRED: (2) VENTS NEEDED

GARAGE AV VOLUME ROOF AREA: 541 SQ. FT.
= (541/300) = 1.80 SQ. FT. / 2 = .901 SQ. FT.
.901 x 144 = 129.84 SQ. IN.
129.84 SQ. IN / 98.75" = 1.31 VENTS NEEDED

AV REQUIRED: (1) VENTS NEEDED

2020 FLORIDA BUILDING CODE (7TH EDITION) SECTION R806 (OFF-RIDGE VENT MAXIMUM OPENING SIZES)

MONROE UNIT ATTIC VENT CALC'S.

MAIN AV VOLUME ROOF AREA: 1,024 SQ. FT.
= (1,024/300) = 3.41 SQ. FT. / 2 = 1.70 SQ. FT.
1.70 x 144 = 245.76 SQ. IN.
245.76 SQ. IN / 98.75" = 2.48 VENTS NEEDED

AV REQUIRED: (3) VENTS NEEDED

GARAGE AV VOLUME ROOF AREA: 523 SQ. FT.
= (523/300) = 1.74 SQ. FT. / 2 = .871 SQ. FT.
.871 x 144 = 125.52 SQ. IN.
125.52 SQ. IN / 98.75" = 1.27 VENTS NEEDED

AV REQUIRED: (1) VENTS NEEDED

2020 FLORIDA BUILDING CODE (7TH EDITION) SECTION R806 (OFF-RIDGE VENT MAXIMUM OPENING SIZES)

THOMPSON ENGINEERING GROUP, INC.
4401 Vineland Road Suite A6 Orlando, FL 32811
Ph: (407) 734-1790
Fax: (407) 734-1790
www.tegfl.com

MJS designers group
residential-commercial-architecture
815 Orienta Ave., Suite #1040
Altamonte Springs, Fl. 32701
Ph: (407) 629-6711
Fax: (407) 629-6776
www.mjsdesignersgroup.com

AIBD

GOBA GREATER ORLANDO BUILDERS ASSOCIATION

5-Unit: Rear Load Detached

Models: Tyler, Jackson, Grant, Jackson & Monroe

Building Pad #XX
Lot# XX-XX, Subdivision
Street Address:
City, State, Zip Code

A division of Park Square Enterprises Inc.
5200 Vineland Rd. Suite #200
Orlando, Fl. 32811
Phone: (407) 529-3000

Park Square HOMES

ISSUE DATE	02/14/2023
REVISIONS	
PROJECT:	22-1148
SCALE:	AS NOTED
DRAWN BY:	C.C.
DESIGNED BY:	MJS

ROOF LAYOUT

A10

Carlos V:\Park Square Homes\MODELS\TOWNHOME MODELS\Townhomes (Orlando)\1- Townhome Models\Rear Load Detached Towns (Raised Heel)\5-Unit\A10 Roof Layout- (ELEV A).dwg Jul 26, 2023,9:12am

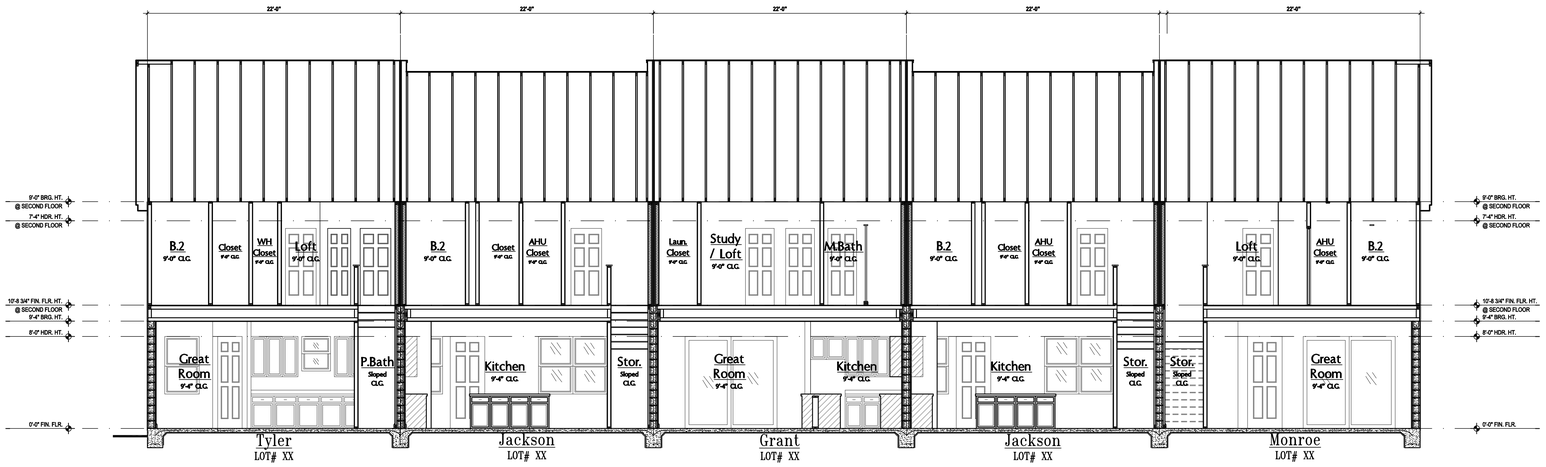

1 / A9

Elevation "B": Building Section

SCALE: 3/16" = 1'-0"

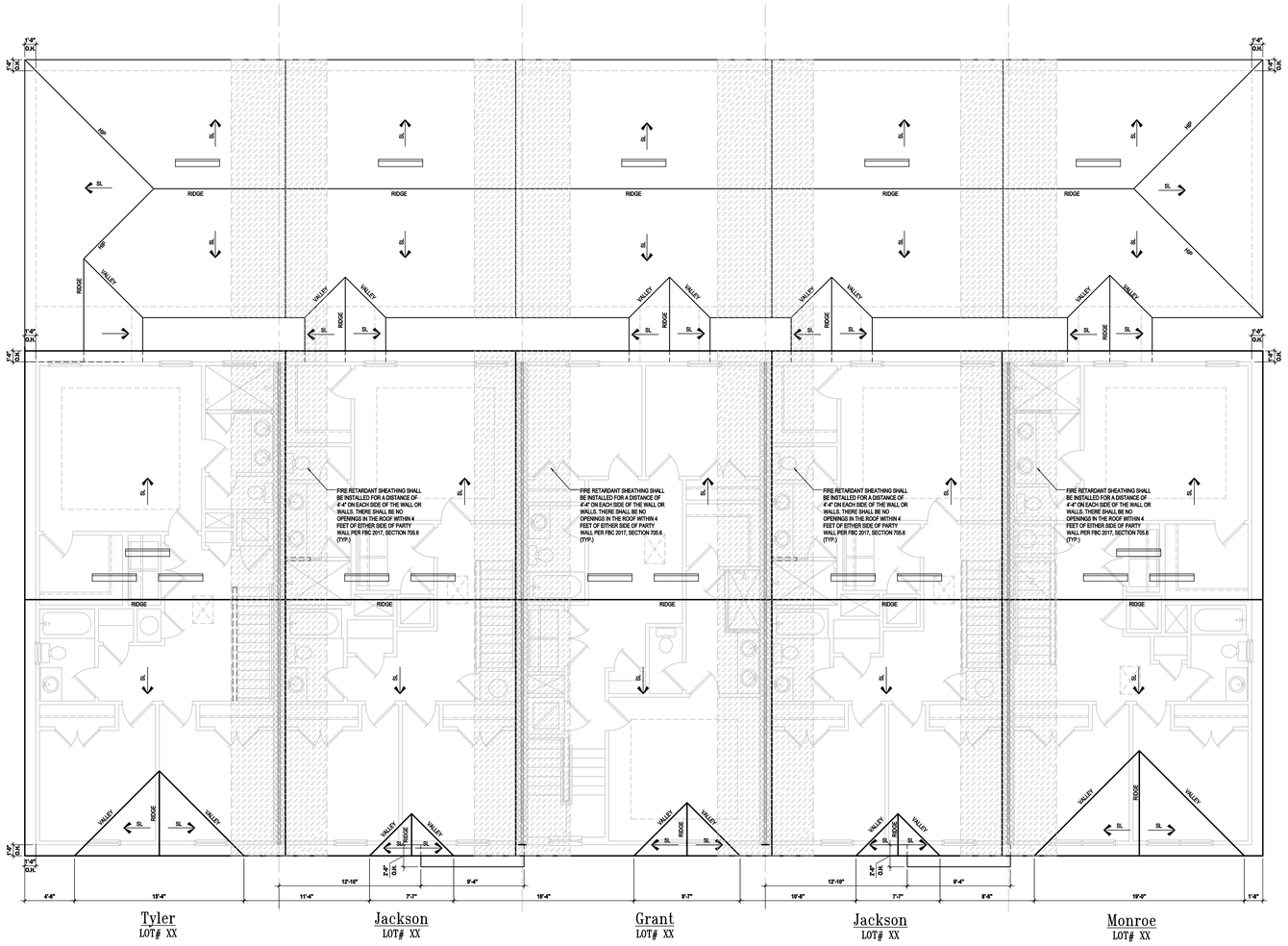

Elevation "B": Roof Layout

SCALE: 3/16" = 1'-0"

TYLER UNIT ATTIC VENT CALC'S.

MAIN AV VOLUME ROOF AREA: 1,077 SQ. FT.
=(1,077/300) = 3.59 SQ. FT. / 2 = 1.795 SQ. FT.
1.795 x 144 = 258.48 SQ. IN.
258.48 SQ. IN / 98.75" = 2.61 VENTS NEEDED

AV REQUIRED: (3) VENTS NEEDED

GARAGE AV VOLUME ROOF AREA: 550 SQ. FT.
=(550/300) = 1.83 SQ. FT. / 2 = .916 SQ. FT.
.916 x 144 = 132 SQ. IN.
132 SQ. IN / 98.75" = 1.33 VENTS NEEDED

AV REQUIRED: (1) VENTS NEEDED

2020 FLORIDA BUILDING CODE (7TH EDITION) SECTION R806 (OFF-RIDGE VENT MAXIMUM OPENING SIZES)

JACKSON UNIT ATTIC VENT CALC'S.

MAIN AV VOLUME ROOF AREA: 951 SQ. FT.
= (951/300) = 3.17 SQ. FT. / 2 = 1.585 SQ. FT.
1.585 x 144 = 228.24 SQ. IN.
228.24 SQ. IN / 98.75" = 2.31 VENTS NEEDED

AV REQUIRED: (2) VENTS NEEDED

GARAGE AV VOLUME ROOF AREA: 486 SQ. FT.
= (486/300) = 1.62 SQ. FT. / 2 = .81 SQ. FT.
.81 x 144 = 116.64 SQ. IN.
116.64 SQ. IN / 98.75" = 1.18 VENTS NEEDED

AV REQUIRED: (1) VENTS NEEDED

2020 FLORIDA BUILDING CODE (7TH EDITION) SECTION R806 (OFF-RIDGE VENT MAXIMUM OPENING SIZES)

GRANT UNIT ATTIC VENT CALC'S.

MAIN AV VOLUME ROOF AREA: 1,056 SQ. FT.
= (1,056/300) = 3.52 SQ. FT. / 2 = 1.76 SQ. FT.
1.76 x 144 = 253.44 SQ. IN.
253.44 SQ. IN / 98.75" = 2.56 VENTS NEEDED

AV REQUIRED: (2) VENTS NEEDED

GARAGE AV VOLUME ROOF AREA: 541 SQ. FT.
= (541/300) = 1.80 SQ. FT. / 2 = .901 SQ. FT.
.901 x 144 = 129.84 SQ. IN.
129.84 SQ. IN / 98.75" = 1.31 VENTS NEEDED

AV REQUIRED: (1) VENTS NEEDED

2020 FLORIDA BUILDING CODE (7TH EDITION) SECTION R806 (OFF-RIDGE VENT MAXIMUM OPENING SIZES)

MONROE UNIT ATTIC VENT CALC'S.

MAIN AV VOLUME ROOF AREA: 1,024 SQ. FT.
= (1,024/300) = 3.41 SQ. FT. / 2 = 1.70 SQ. FT.
1.70 x 144 = 245.76 SQ. IN.
245.76 SQ. IN / 98.75" = 2.48 VENTS NEEDED

AV REQUIRED: (3) VENTS NEEDED

GARAGE AV VOLUME ROOF AREA: 523 SQ. FT.
= (523/300) = 1.74 SQ. FT. / 2 = .871 SQ. FT.
.871 x 144 = 125.52 SQ. IN.
125.52 SQ. IN / 98.75" = 1.27 VENTS NEEDED

AV REQUIRED: (1) VENTS NEEDED

2020 FLORIDA BUILDING CODE (7TH EDITION) SECTION R806 (OFF-RIDGE VENT MAXIMUM OPENING SIZES)

Jul 26, 2023,9:13am Carlos V:\Park Square Homes\MODELS\TOWNHOME MODELS\Townhomes (Orlando)\1- Townhome Models\Rear Load Detached Towns (Raised Heel)\5-Unit\A11 Roof Layout- (ELEV B).dwg

THOMPSON ENGINEERING GROUP, INC.
4401 Vineland Road Suite A6 Orlando, FL 32811
Ph: (407) 734-1790
Fax: (407) 734-1790
www.teg8.com

815 Orienta Ave., Suite #1040
Altamonte Springs, Fl. 32701
Ph: (407) 629-6711
Fax: (407) 629-6776
www.mjsdesignersgroup.com

designers group
residential-commercial-architecture

GOBA GREATER ORLANDO BUILDERS ASSOCIATION

5-Unit: Rear Load Detached

Models: Tyler, Jackson, Grant, Jackson & Monroe

Building Pad #XX
Lot# XX-XX, Subdivision
Street Address
City, State, Zip Code

A division of Park Square Enterprises Inc.
5200 Vineland Rd. Suite #200
Orlando, Fl. 32811
Phone: (407) 329-3000

ISSUE DATE	02/14/2023
REVISIONS	
PROJECT:	22-1148
SCALE:	AS NOTED
DRAWN BY:	C.C.
DESIGNED BY:	MJS

ROOF LAYOUT
A11

NOTES:

1. STAIRWAY CONSTRUCTION TO CONFORM TO FBCR 2020, 7TH EDITION SECTION R311.7
2. MAX HT. OF RISER TO BE 7 3/4".
3. MIN. WIDTH OF TREAD TO BE 9" (EXCLUSIVE OF NOSING.
4. ALL TREADS LESS THAN 10" IN WIDTH SHALL HAVE APPROX. 1" OF NOSING.
5. 3/16" MAX VARIATION IN RISERS/TREADS ADJACENT TO EACH OTHER.
6. 3/8" MAX VARIATION IN ANY RISE/TREAD.
7. HAND RAIL CIRCULAR CROSS SECTION DIA. TO BE 1 1/4" - 2" OR TO PROVIDE EQUIVALENT GRASPABILITY.
8. UNDER MIN. 6" WIDE @NARROW END.
9. 34'-38" HANDRAIL HT.
10. HEADROOM CLEARANCE MIN 6'-8".

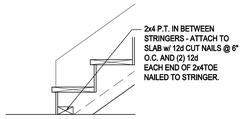

S1 A12 TYP. STAIR CONNECT.
SCALE: 3/4" = 1'-0"

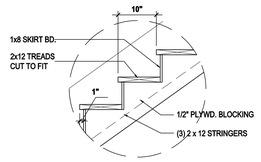

S2 A12 TREAD & RISER DETAIL
SCALE: 3/4" = 1'-0"

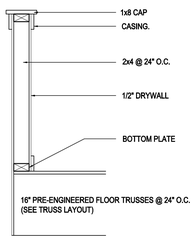

S3 A12 HALF WALL DETAIL
SCALE: 3/4" = 1'-0"

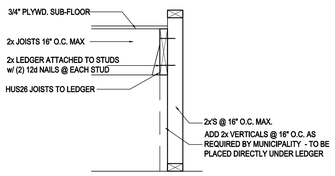

S4 A12 LANDING CONNECT. DETAIL
SCALE: 3/4" = 1'-0" PLATFORM FRAMING

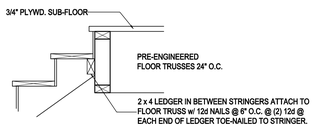

S5 A12 STAIR CONNECT. @ FLR. TRUSS
SCALE: 3/4" = 1'-0" STRINGER TO FLOOR TRUSS

Stair Details

SCALE: 1/4" = 1'-0"

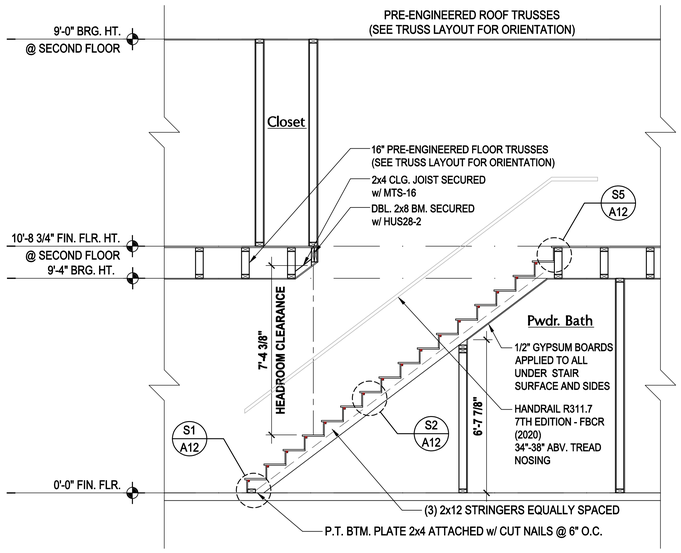

1 A12 TYLER STAIR SECTION
SCALE: 3/8" = 1'-0"

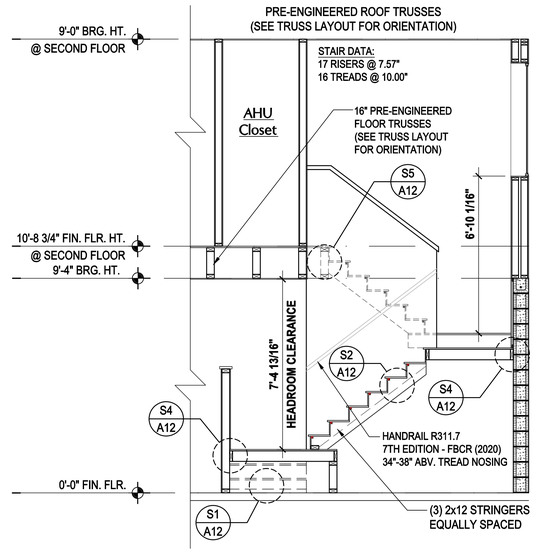

2 A12 GRANT STAIR SECTION
SCALE: 3/8" = 1'-0"

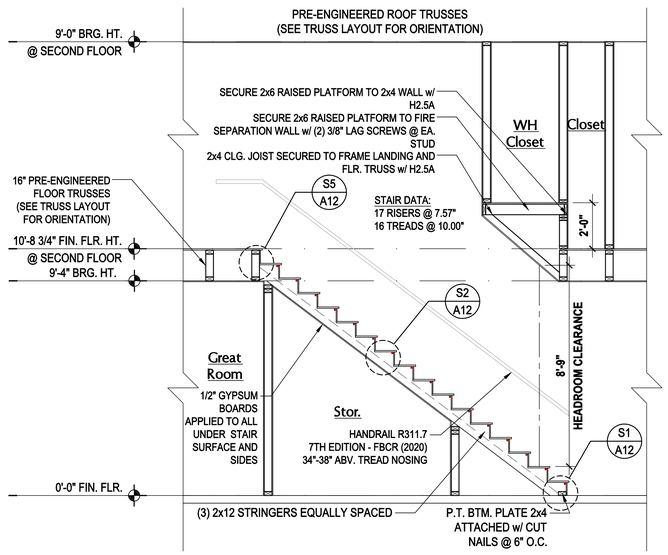

3 A12 JACKSON STAIR SECTION
SCALE: 3/8" = 1'-0"

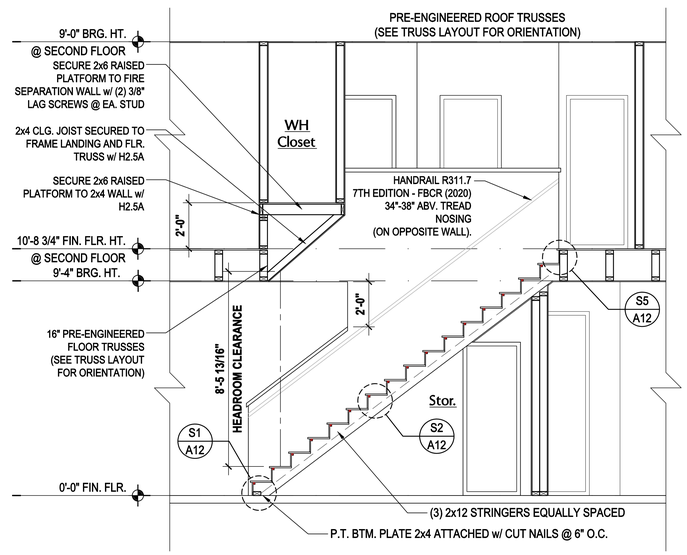

4 A12 MONROE STAIR SECTION
SCALE: 3/8" = 1'-0"

FIND US ON FACEBOOK & HOUZZ AT MJS CUSTOM HOME DESIGNS

THOMPSON ENGINEERING GROUP, INC.
4401 Vineland Road Suite A6 Orlando, FL 32811
Ph: (407) 734-1790
Fax: (407) 734-1790
www.tegfl.com

MJS designers group
residential-commercial-architecture
815 Orienta Ave., Suite #1040
Altamonte Springs, Fl. 32701
Ph: (407) 629-6711
Fax: (407) 629-6776
www.mjsdesignersgroup.com

AIBD
GOBA

5-Unit: Rear Load Detached
Models: Tyler, Jackson, Grant, Jackson & Monroe
Building Pad #XX
Lot# XX-XX, Subdivision
Street Address
City, State, Zip Code

A division of Park Square Enterprises Inc.
5200 Vineland Rd. Suite #200
Orlando, Fl. 32811
Phone: (407) 529-3000
Park Square HOMES

ISSUE DATE	02/14/2023
REVISIONS	
PROJECT:	22-1148
SCALE:	AS NOTED
DRAWN BY:	C.C.
DESIGNED BY:	MJS

SECTIONS
A12

Carlos V:\Park Square Homes\MODELS\TOWNHOME MODELS\Townhomes (Orlando)\1-Townhome Models\Rear Load Detached Towns (Raised Heel)\5-Unit\A12 Stair Sections.dwg
Jul 26, 2023,9:13am

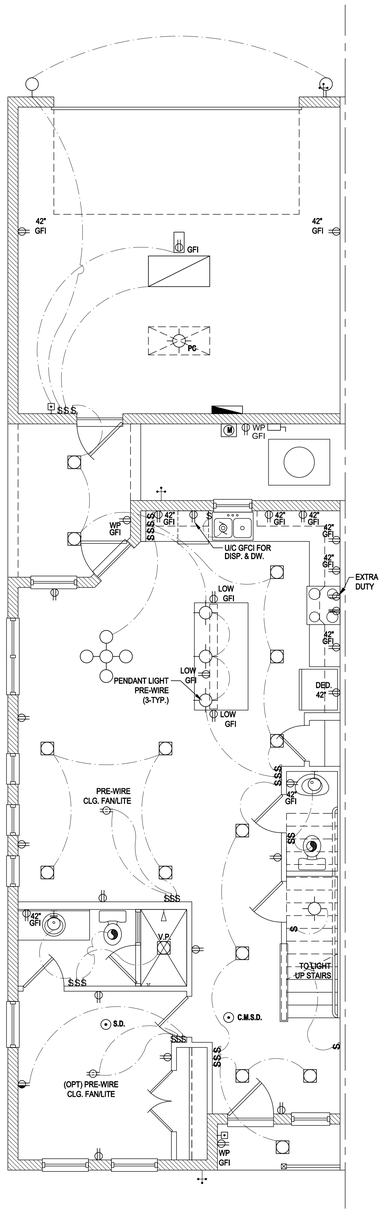

Tyler First Floor

SCALE: 1/4" = 1'-0"

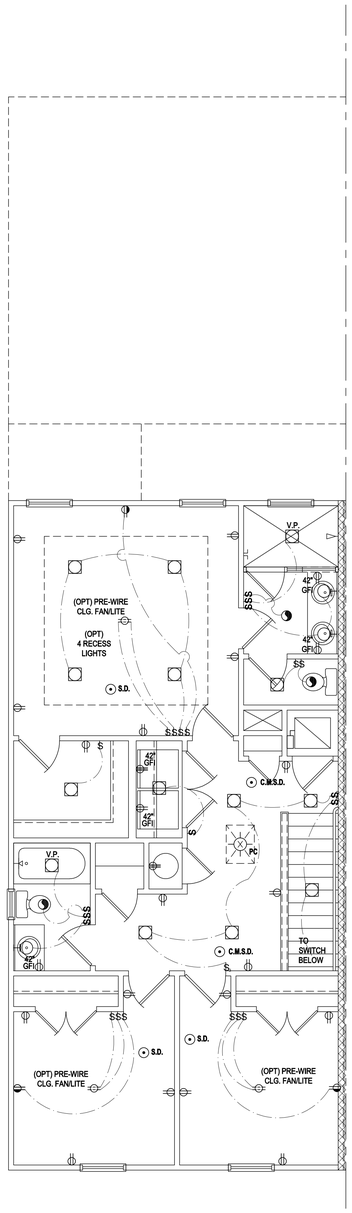

Tyler Second Floor

SCALE: 1/4" = 1'-0"

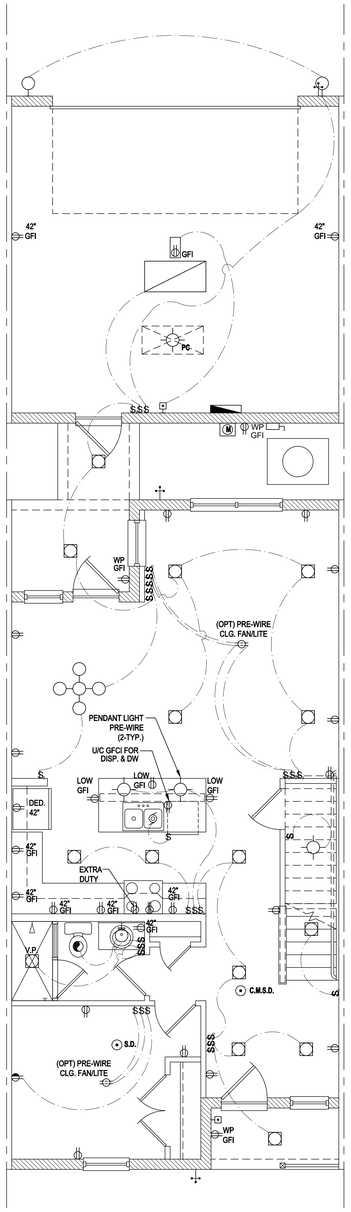

Jackson First Floor

SCALE: 1/4" = 1'-0"

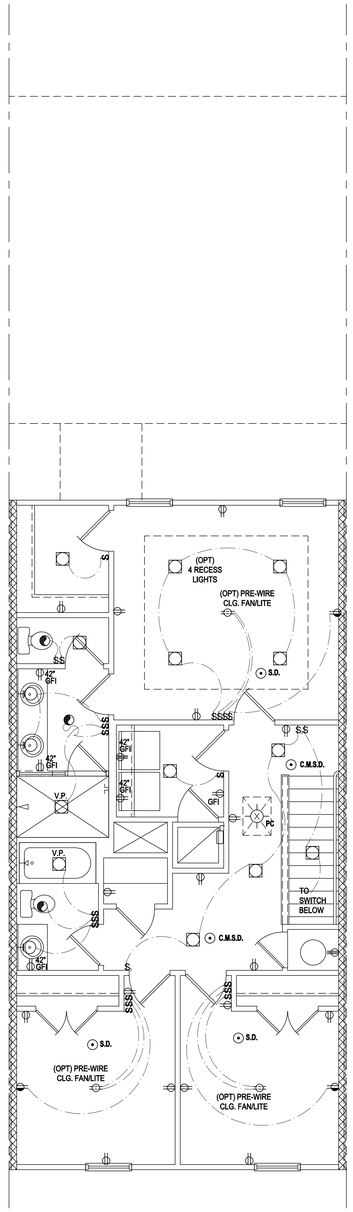

Jackson Second Floor

SCALE: 1/4" = 1'-0"

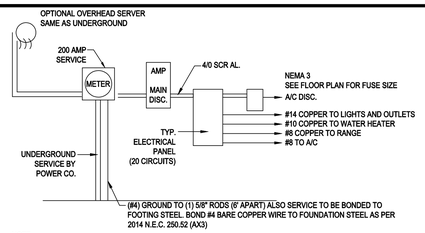

NOTE:

- ALL ELECTRICAL WORK AND MATERIAL PROVIDED SHALL COMPLY WITH THE FLORIDA BUILDING CODE (2020)
- THE ABOVE ELECTRICAL LAYOUT IS FOR BID PURPOSE ONLY;
- ELECTRICAL MATERIALS AND INSTALLATIONS SHALL COMPLY w/ APPLICABLE PROVISIONS OF THE NATIONAL ELECTRICAL CODE 250.52 (AX1) TO (6), LOCAL CODES AND THE LOCAL POWER COMPANY

200 AMP ELECTRICAL RISER

GENERAL NOTES KEY:

1. BUILDER TO VERIFY EXACT LOCATION OF FLOOR OUTLETS IN FIELD.
2. ALL OUTLETS ARE TO BE AFCI PROTECTED.
3. ALL 15A AND 20A 120V BRANCH CIRCUITS WILL BE AFCI PROTECTED.
4. ALL 15A AND 20A 120V BRANCH CIRCUITS LOCATED IN THE GARAGE AND LAUNDRY WILL BE GFCI PROTECTED.
5. ALL GARAGE BAYS WILL HAVE DEDICATED GFCI OUTLET.
6. ALL OUTLETS LOCATED IN THE KITCHEN AND BATHROOMS ARE TO BE GFCI PROTECTED.
7. DW. AND GARBAGE DISPOSAL ARE TO BE GFCI PROTECTED.
8. EXCEPTIONS TO THE GFCI STIPULATION WILL BE ALLOWED ONLY IF ALLOWED PER CURRENT NFPA / NEC.
9. OUTLETS LOCATED IN THE LAUNDRY ARE TO BE GFCI AND AFCI PROTECTED.
10. OUTLETS LOCATED WITHIN 6'-0" OF A WET AREA ARE TO BE GFCI PROTECTED.
11. ALL OUTLETS OVER COUNTERTOPS TO BE 42" A.F.F. (U.N.O.).
12. ALL SMOKE/CARBON MONOXIDE DETECTORS ARE TO BE HARD WIRED, INTERCONNECTED AND AFCI PROTECTED.
13. 8'-0" HEIGHT VANITY LIGHTS IN MASTER BATHROOM AND 7'-0" IN ALL OTHER BATHROOMS.

NOTES:

- THIS DIAGRAMMATIC PLAN IS INTENDED TO SHOW LIGHTING AND CONVENIENCE OUTLETS ONLY. IT IS THE ELECTRICAL CONTRACTORS RESPONSIBILITY TO VERIFY THE REQUIREMENT AND LOCATIONS OF ALL ELECTRICAL EQUIPMENT, (INCLUDING KITCHEN EQUIPMENT) AND PROVIDE AND INSTALL COMPLETE ELECTRICAL SERVICE AS REQUIRED PER NFPA, NEC, FBC CODES AND ALL REIGNING MUNICIPALITY CODES, STANDARDS AND ORDINANCES.
- LOCATION OF FIXTURES AND / OR OUTLETS ARE SUGGESTED LOCATIONS AND MEET MOST LOCAL CODE REQUIREMENTS. ADDITIONS OR ADJUSTMENTS MAY BE MADE BETWEEN THE OWNER AND BUILDER IN THE FIELD.
- ALL ELECTRICAL WORK AND APPLIANCES ARE IN FULL COMPLIANCE WITH N.F.P.A., N.E.C., F.B.C. 7TH EDITION (2020) RESIDENTIAL, AND ALL APPLICABLE LOCAL STANDARDS, CODES, AND ORDINANCES.
- VARIOUS SYMBOLS ON ELECTRICAL LEGEND MAY OR MAY NOT BE USED ON THIS PLAN.

SMOKE DETECTOR REQUIREMENTS:
ALL SMOKE/CARBON DETECTOR LOCATIONS MUST BE A MINNIMUM OF 3' FROM ANY BATHROOM PER FBC-R314.3 (4). THEY MUST ALSO BE LOCATED NO MORE THAN 10' FROM ANY BEDROOM DOOR OPENING PER FBC-R315.1.

ELECTRICAL KEY:

	CEILING MOUNTED LIGHT
PC	PULL CHAIN LIGHT
	FLUSHMOUNT LED
	WALL MOUNTED LIGHT
	WALL WASH RECESSED
	DUPLEX RECEPTACLE
	220 V RECEPTACLE
	1/2 HOT, 1/2 SWITCHED
WP	WATER PROOF RECEPTACLE
	FLOOR RECEPTACLE
	PRE-WIRE FOR CLG. FAN
GFI	GROUND FAULT INTERRUPT
$	WALL SWITCH
$3	3-WAY SWITCH
$D	DIMMER SWITCH
	TELEPHONE JACK
	CABLE JACK
	PRE-WIRE GARAGE DOOR OPENER
	FLUORESCENT LIGHT
	ELECTRICAL PANEL
	CHIME
	DOOR BELL / GARAGE DOOR SWITCH
	DISCONNECT SWITCH
M	ELECTRICAL METER
S.D.	SMOKE DETECTOR
C.M.S.D.	CARBON MONOXIDE / SMOKE DETECTOR
	CEILING FAN
	WALL SCONCE
	CHANDELIER
	SPOT LIGHT
	FLUSH MOUNT FLUORESCENT LIGHT
	FAN / LIGHT COMBINATION
	GARBAGE DISPOSAL MOTOR
	SPEAKER
J	JUNCTION BOX
L.V.	LOW VOLTAGE
V.P.	VAPOR PROOF
A.F.	ARC FAULT PROTECTION
IC	INTERCOM

Electrical Plan

SCALE: 1/4" = 1'-0"

THOMPSON ENGINEERING GROUP, INC.
4401 Vineland Road
Suite A-12 Orlando, FL 32811
Fax: (407) 734-1790
www.tegfl.com

815 Orienta Ave., Suite #1040
Altamonte Springs, Fl. 32701
Ph: (407) 629-6711
Fax: (407) 629-6776
www.mjsdesignersgroup.com

MJS designers group
residential-commercial-architecture

GOBA GREATER ORLANDO BUILDERS ASSOCIATION

5-Unit: Rear Load Detached

Models: Tyler, Jackson, Grant, Jackson & Monroe

Building Pad #XX
Lot# XX-XX, Subdivision
Street Address
City, State, Zip Code

A division of Park Square Enterprises Inc.
5200 Vineland Rd. Suite #200
Orlando, Fl. 32811
Phone: (407) 329-3000

Park Square HOMES

ISSUE DATE	02/14/2023
REVISIONS	
PROJECT:	22-1148
SCALE:	AS NOTED
DRAWN BY:	C.C.
DESIGNED BY:	MJS

ELECTRICAL LAYOUT
E1

Carlos V:\Park Square Homes\MODELS\TOWNHOME MODELS\Townhomes (Orlando)\1 - Townhome Models\Rear Load Detached Towns (Raised Hse)\5-Unit\E1 Electrical Layout (Tyler)(Jackson).dwg
Jul 26, 2023,9:13am

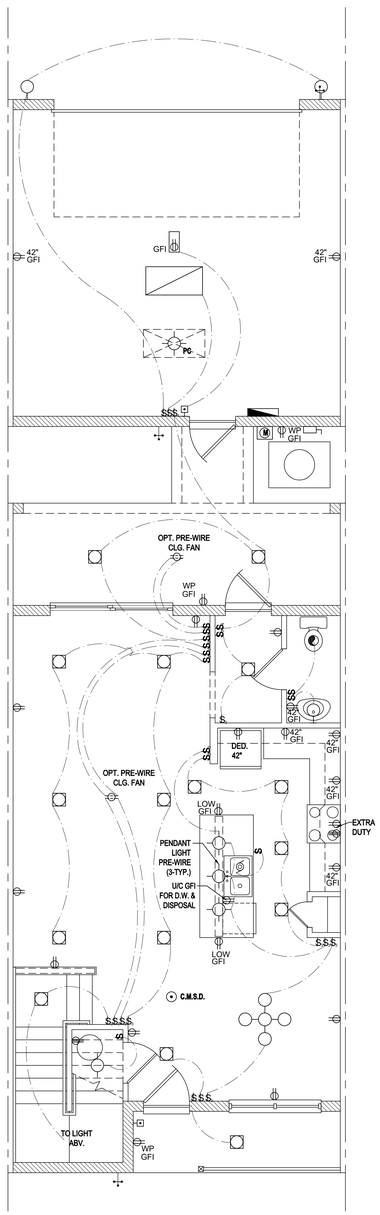

Grant First Floor

SCALE: 1/4" = 1'-0"

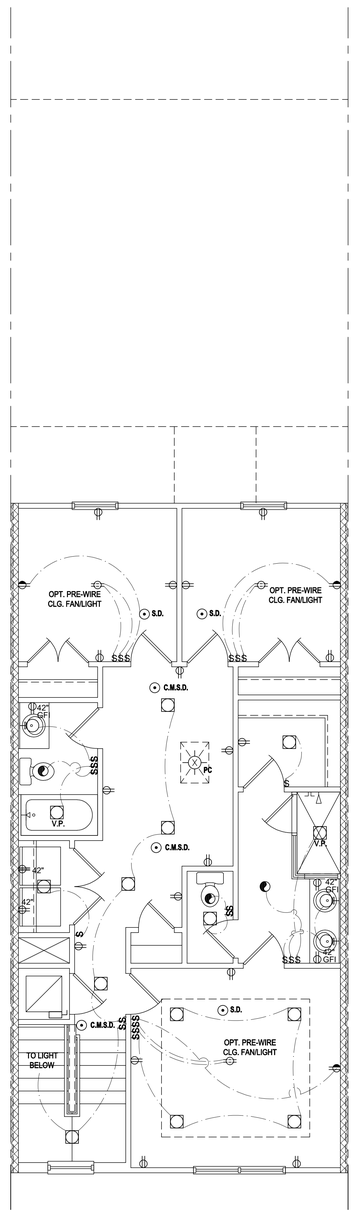

Grant Second Floor

SCALE: 1/4" = 1'-0"

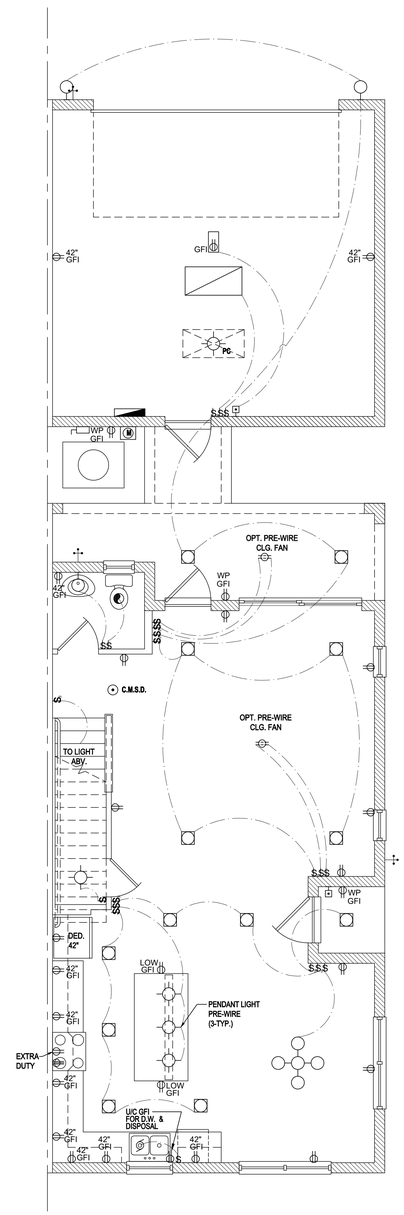

Monroe First Floor

SCALE: 1/4" = 1'-0"

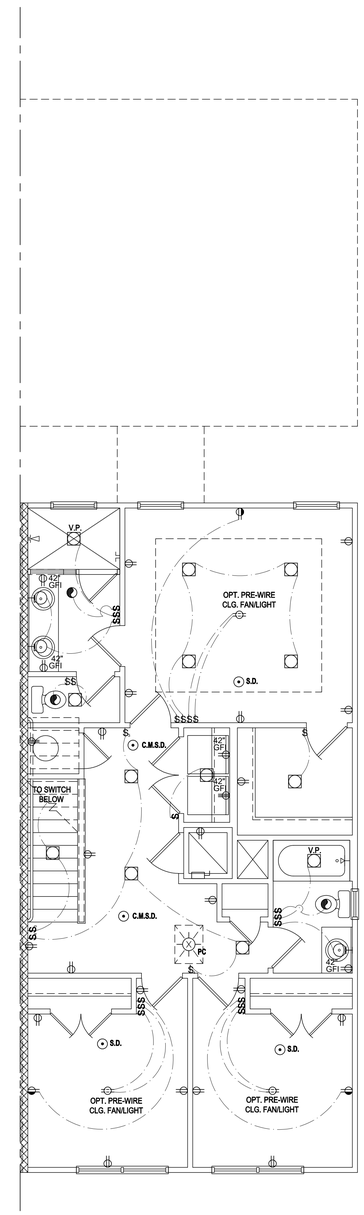

Monroe Second Floor

SCALE: 1/4" = 1'-0"

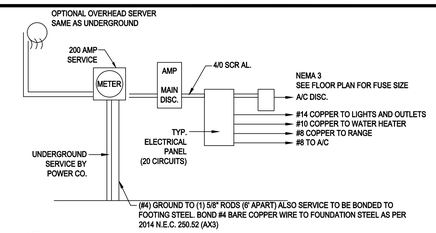

NOTE:

- ALL ELECTRICAL WORK AND MATERIAL PROVIDED SHALL COMPLY WITH THE FLORIDA BUILDING CODE (2020)
- THE ABOVE ELECTRICAL LAYOUT IS FOR BID PURPOSE ONLY.
- ELECTRICAL MATERIALS AND INSTALLATIONS SHALL COMPLY w/ APPLICABLE PROVISIONS OF THE NATIONAL ELECTRICAL CODE 250.52 (A)(1) TO (6), LOCAL CODES AND THE LOCAL POWER COMPANY

200 AMP ELECTRICAL RISER

GENERAL NOTES KEY:

1. BUILDER TO VERIFY EXACT LOCATION OF FLOOR OUTLETS IN FIELD.
2. ALL OUTLETS ARE TO BE AFCI PROTECTED.
3. ALL 15A AND 20A 120V BRANCH CIRCUITS WILL BE AFCI PROTECTED.
4. ALL 15A AND 20A 120V BRANCH CIRCUITS LOCATED IN THE GARAGE AND LAUNDRY WILL BE GFCI PROTECTED.
5. ALL GARAGE BAYS WILL HAVE DEDICATED GFCI OUTLET.
6. ALL OUTLETS LOCATED IN THE KITCHEN AND BATHROOMS ARE TO BE GFCI PROTECTED.
7. DW. AND GARBAGE DISPOSAL ARE TO BE GFCI PROTECTED.
8. EXCEPTIONS TO THE GFCI STIPULATION WILL BE ALLOWED ONLY IF ALLOWED PER CURRENT NFPA / NEC.
9. OUTLETS LOCATED IN THE LAUNDRY ARE TO BE GFCI AND AFCI PROTECTED.
10. OUTLETS LOCATED WITHIN 6'-0" OF A WET AREA ARE TO BE GFCI PROTECTED.
11. ALL OUTLETS OVER COUNTERTOPS TO BE 42" A.F.F. (U.N.O.).
12. ALL SMOKE/CARBON MONOXIDE DETECTORS ARE TO BE HARD WIRED, INTERCONNECTED AND AFCI PROTECTED.
13. 8'-0" HEIGHT VANITY LIGHTS IN MASTER BATHROOM AND 7'-0" IN ALL OTHER BATHROOMS.

NOTES:

- THIS DIAGRAMMATIC PLAN IS INTENDED TO SHOW LIGHTING AND CONVENIENCE OUTLETS ONLY. IT IS THE ELECTRICAL CONTRACTORS RESPONSIBILITY TO VERIFY THE REQUIREMENT AND LOCATIONS OF ALL ELECTRICAL EQUIPMENT, (INCLUDING KITCHEN EQUIPMENT) AND PROVIDE AND INSTALL COMPLETE ELECTRICAL SERVICE AS REQUIRED PER NFPA, NEC, FBC CODES AND ALL REIGNING MUNICIPALITY CODES, STANDARDS AND ORDINANCES.
- LOCATION OF FIXTURES AND / OR OUTLETS ARE SUGGESTED LOCATIONS AND MEET MOST LOCAL CODE REQUIREMENTS. ADDITIONS OR ADJUSTMENTS MAY BE MADE BETWEEN THE OWNER AND BUILDER IN THE FIELD.
- ALL ELECTRICAL WORK AND APPLIANCES ARE IN FULL COMPLIANCE WITH N.F.P.A., N.E.C., F.B.C. 7TH EDITION (2020) RESIDENTIAL, AND ALL APPLICABLE LOCAL STANDARDS, CODES, AND ORDINANCES.
- VARIOUS SYMBOLS ON ELECTRICAL LEGEND MAY OR MAY NOT BE USED ON THIS PLAN.

SMOKE DETECTOR REQUIREMENTS:
ALL SMOKE/CARBON DETECTOR LOCATIONS MUST BE A MINNIMUM OF 3' FROM ANY BATHROOM PER FBC-R314.3 (4). THEY MUST ALSO BE LOCATED NO MORE THAN 10' FROM ANY BEDROOM DOOR OPENING PER FBC-R315.1.

ELECTRICAL KEY:

	CEILING MOUNTED LIGHT
PC	PULL CHAIN LIGHT
	FLUSHMOUNT LED
	WALL MOUNTED LIGHT
	WALL WASH RECESSED
	DUPLEX RECEPTACLE
	220 V RECEPTACLE
	1/2 HOT, 1/2 SWITCHED
WP	WATER PROOF RECEPTACLE
	FLOOR RECEPTACLE
	PRE-WIRE FOR CLG. FAN
GFI	GROUND FAULT INTERRUPT
S	WALL SWITCH
3	3-WAY SWITCH
$D	DIMMER SWITCH
	TELEPHONE JACK
	CABLE JACK
	PRE-WIRE GARAGE DOOR OPENER
	FLUORESCENT LIGHT
	ELECTRICAL PANEL
	CHIME
	DOOR BELL / GARAGE DOOR SWITCH
	DISCONNECT SWITCH
M	ELECTRICAL METER
S.D.	SMOKE DETECTOR
C.M.S.D.	CARBON MONOXIDE / SMOKE DETECTOR
	CEILING FAN
	WALL SCONCE
	CHANDELIER
	SPOT LIGHT
	FLUSH MOUNT FLUORESCENT LIGHT
	FAN / LIGHT COMBINATION
	GARBAGE DISPOSAL MOTOR
S	SPEAKER
J	JUNCTION BOX
L.V.	LOW VOLTAGE
V.P.	VAPOR PROOF
A.F.	ARC FAULT PROTECTION
IC	INTERCOM

Electrical Plan

SCALE: 1/4" = 1'-0"

TEG
THOMPSON ENGINEERING GROUP, INC.
4401 Vineland Road Suite A6 Orlando, FL 32811
Ph: (407) 704-4040
Fax: (407) 734-1790
www.tegfl.com

MJS designers group
residential-commercial-architecture
815 Orienta Ave., Suite #1040
Altamonte Springs, Fl. 32701
Ph: (407) 629-6711
Fax: (407) 629-6776
www.mjsdesignersgroup.com

ALBD

GOBA GREATER ORLANDO BUILDERS ASSOCIATION

5-Unit: Rear Load Detached

Models: Tyler, Jackson, Grant, Jackson & Monroe

Building Pad #XX
Lot# XX-XX, Subdivision
Street Address
City, State, Zip Code

A division of Park Square Enterprises Inc.
5200 Vineland Rd, Suite #200
Orlando, Fl. 32811
Phone: (407) 529-3000

Park Square HOMES

ISSUE DATE	02/14/2023
REVISIONS	
PROJECT:	22-1148
SCALE:	AS NOTED
DRAWN BY:	C.C.
DESIGNED BY:	MJS

ELECTRICAL LAYOUT
E2

Carlos V:\Park Square Homes\MODELS\TOWNHOME MODELS\Townhomes (Orlando)\1- Townhome Models\Rear Load Detached Towns (Raised Heel)\5-Unit\E2 Electrical Layout (Grant)(Monroe).dwg
Jul 26, 2023,9:13am

FIND US ON FACEBOOK & HOUZZ AT MJS CUSTOM HOME DESIGNS

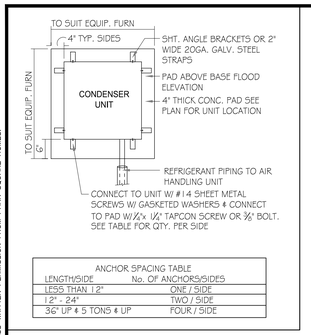

ANCHOR SPACING TABLE	
LENGTH/SIDE	No. OF ANCHORS/SIDES
LESS THAN 12"	ONE / SIDE
12" - 24"	TWO / SIDE
36" UP & 5 TONS & UP	FOUR / SIDE

1 COND. ANCHOR DETAIL
N.T.S.

FIELD REPAIR NOTES

1- MISSED FOOTING DOWELS MAY BE SUBSTITUTED W/ A STRAIGHT #5 REBAR SET IN A 3/4" DIA. x 6" DEEP HOLE FILLED W/ UNITEX PROPOXY 300 OR SIMPSON SET OR ETF ADHESIVES.

2- BLOCK WALL OVERHANGING SLAB CONDITION: UP TO 7/8" - NO REPAIR NECESSARY 7/8" TO 1 1/4" - ADD FILLED CELL (NO VERTICAL STEEL) MIDPOINT OF WALL BETWEEN EXISTING FILLED CELLS (WITH STEEL) IN AREAS AFFECTED. 1 1/4"+ - REQUIRE SPECIAL ENGINEERING LETTER.

3- PENETRATION OF PLUMBING PIPES/DRYER VENTS THRU PLATES OF A LOAD BEARING WALL MAY OCCUR PROVIDED DBL. STUDS ARE ADDED ON EITHER SIDE OF PENETRATION WITHIN 3" AND TRUSS/FLOOR TRUSS IS NO CLOSER THAN 3" FROM PENETRATION. ADD (1) MTS12 @ TOP AND BOTTOM PLATE.

VERIFICATION OF FIELD CONDITIONS:

CONTRACTOR SHALL VERIFY ALL FIELD CONDITIONS AND DIMENSIONS RELATIVE TO SAME. WHERE THERE ARE CONFLICTS BETWEEN ACTUAL FIELD CONDITIONS AND DATA PRESENTED IN THE DRAWINGS, SUCH CONDITIONS SHALL BE CALLED TO THE ARCHITECTS AND OR TO THE ENGINEER OF RECORDS (EOR) ATTENTION AND NECESSARY ADJUSTMENTS MADE PER THEIR INSTRUCTIONS.

FOUNDATION NOTES

1. CONTRACTOR VERIFY ALL DIMENSIONS ON JOB SITE.
2. ■ DENOTES FILL CELL REINF. W/ CONC. W/ (1) #5 REBAR. GRADE 60.
   ▣ DENOTES FILL CELL REINF. W/ CONC. W/ (2) #5 REBAR. GRADE 60.
3. DENOTES FLOOR SLAB OF PLANT MIX CONCRETE 2500 P.S.I. 4" THICK WITH 6X6 10/10 GAUGE REINFORCING MAT. W/ MIN. 1" COVER TERMITE TREATED SOIL WITH 0.006mm (6mil) POLYETHYLENE VAPOR BARRIER OVER COMPACTED CLEAN FILL. WWF SHALL BE PLACE IN MIDDLE TO UPPER THIRD OF SLAB AND SUPPORTED ON APPROVED SLAB BOLSTERS. *FIBER MESH REINFORCEMENT MAY USED AS ALTERNATIVE TO WIRE.
4. DO NOT SCALE PRINTS! CONSTRUCTION TO BE FROM CALCULATED DIMENSIONS ONLY. ANY DISCREPANCIES OR ERRORS TO BE REPORTED PROMPTLY TO SUPER-VISOR FOR CLARIFICATION.
5. WATER HEATER T&P RELIEF VALVE SHALL E FULL SIZE TO EXTERIOR. WATER HEATER AT OR ABOVE FLOOR LEVEL 61-FALL E IN A FAN WITH DRAIN TO EXTERIOR. WATER HEATER SHALL HAVE APPROVED THERMAL EXPANSION DEVICE
6. PAVERS MAY BE USED ILO CONCRETE SLABS IN PATIO, PORCH, DRIVE AND WALKWAY AREAS. DELETE SLAB IN AREAS PAVERS ARE USED.
7. MECHANICAL EQUIP. LOCATIONS WILL BE DETERMINED BY COMMUNITY AND COUNTY CODES.
8. IN LIEU OF TREATING THE SOIL, AN ALTERNATIVE TO TERMITE TREATED SOIL CA BE PREMISE 75 WP TERMICIDE.
9. BORA -CARE TO BE APPLIED ON INTERIOR WALLS W/ MANUFACTURER'S INSTRUCTIONS AND SPECIFICATIONS, PURSUANT FLORIDA BUILDING CODE LATEST EDITION.

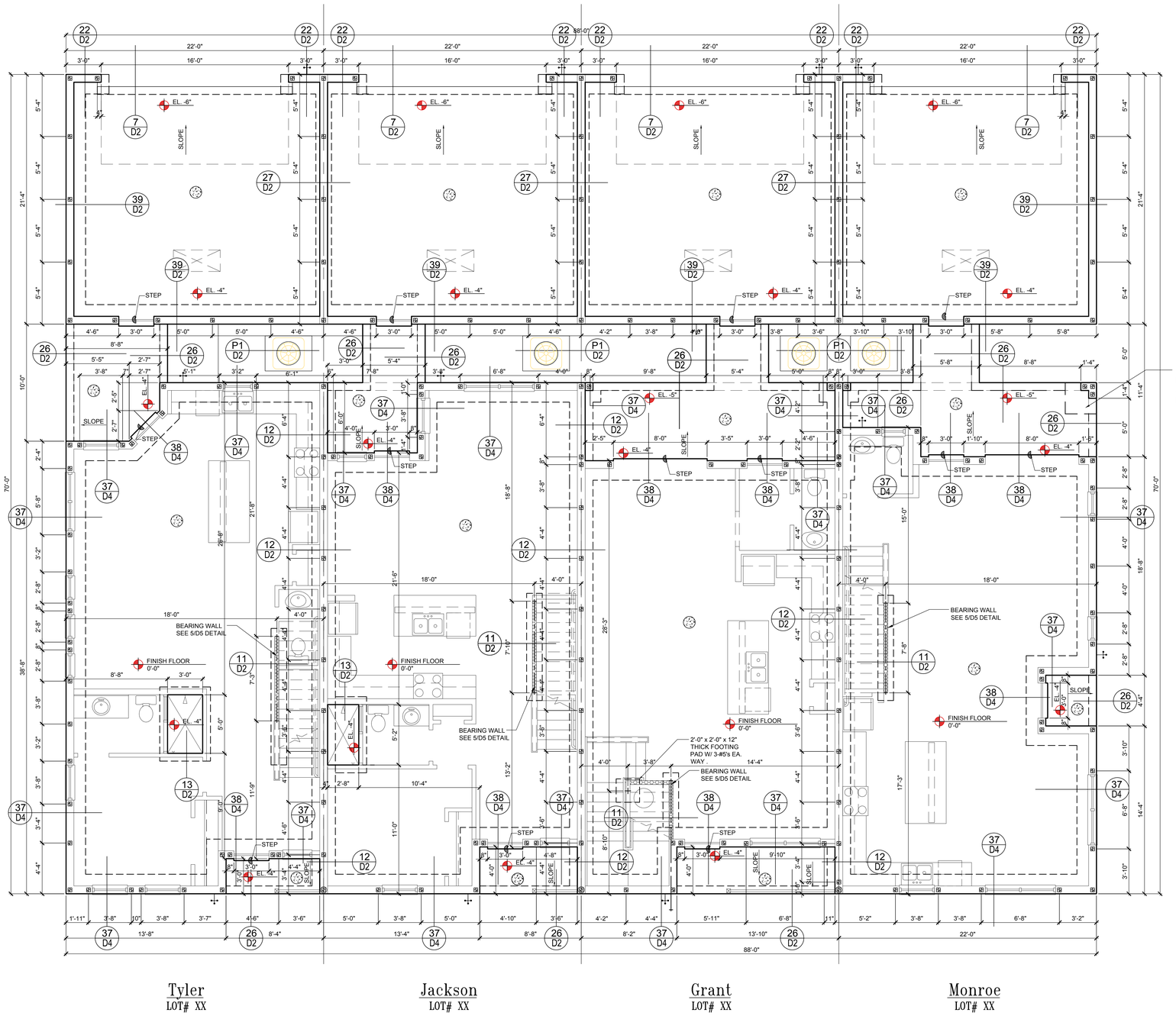

FIND US ON FACEBOOK & HOUZZ AT MJS CUSTOM HOME DESIGNS

THOMPSON ENGINEERING GROUP, INC.
4401 Vineland Road Suite #d Orlando, FL 32811
Ph: (407) 734-1459
Fax: (407) 734-1790
www.tegfl.com

815 Orienta Ave., Suite #1040
Altamonte Springs, Fl. 32701
Ph: (407) 629-6711
Fax: (407) 629-6776
www.mjsdesignersgroup.com

designers group
residential-commercial-architecture

4-Unit: Rear Load Detached

Models: Tyler, Jackson, Grant & Monroe

Building Pad #XX
Lot# XX-XX, Subdivision
Street Address
City, State, Zip Code

A division of Park Square Enterprises Inc.
5200 Vineland Rd. Suite #200
Orlando, Fl. 32811
Phone: (407) 529-3000

Park Square HOMES

ISSUE DATE	02/15/2023
REVISIONS	
PROJECT:	22-1148
SCALE:	AS NOTED
DRAWN BY:	M.C.
DESIGNED BY:	MJS

FOUNDATION PLAN
ELEV. A 4 UNIT
S1

Design1C:\Users\Design1\OneDrive - Thompson Engineering Group\Desktop\4-Unit\dwg Files\S1 Foundation Plan.dwg
Jul 26, 2023,12:59pm

Foundation Plan

SCALE 3/16" = 1'-0"

CAST CRETE / LOTTS / WEKIWA / FLORIDA ROCK PRECAST LINTEL SCHEDULE

LINTEL NO.	LENGTH	TYPE	COMMENTS
L-1	17'-4"	8F32-1B/1T	GARAGE DOOR
L-2	4'-6"	8R14-1B/1T	GARAGE/FRONT DOOR
L-3	4'-6"	8F28-1B/1T	3050 S.H.
L-4	4'-0"	8F28-1B/1T	2'X6" X 2'X6" FIX. GLS.
L-5	7'-6"	8F28-1B/1T	(2) 3050 S.H.
L-6	10'-6"	8F16-1B/1T	9'-0" X 8'-0" S.G.D.
L-7	3'-6"	8F28-1B/1T	2' X 2' FIX. GLS.
L-8	9'-4"	8F16-1B/1T	8'-0" X 8'-0" S.G.D.
L-9	4'-0"	8F16-1B/1T	2630 S.H.
L-10	7'-6"	8F16-1B/1T	(2) 3050 S.H.
L-11	4'-6"	8F16-1B/1T	3050/3040/3030 S.H.
L-12	3'-6"	8F16-1B/1T	2030 S.H.
L-13	6'-6"	8F16-1B/1T	5050 S.H.
L-14	5'-10"	8F8-1B/1T	ENTRY
L-15	11'-4"	8F16-1B/1T	LANAI
L-16	6'-6"	8F8-1B/1T	ENTRY
L-17	21'-4"	8F16-1B/1T	LANAI
L-18	9'-4"	8F16-1B/1T	LANAI
L-19	6'-6"	8F16-1B/1T	LANAI
L-20	21'-0"	8F16-1B/1T	LANAI

SAFE GRAVITY LOADS FOR 8" PRECAST & PRESTRESSED U-LINTELS

LENGTH \ TYPE	BUB	SAFE LOAD - POUNDS PER LINEAR FOOT						
		8F8–0B	8F12–0B	8F16–0B	8F20–0B	8F24–0B	8F28–0B	8F32–0B
		8F8–1B	8F12–1B	8F16–1B	8F20–1B	8F24–1B	8F28–1B	8F32–1B
3'–6" (42") PRECAST	2231	3069	3719	5163	6607	8054	9502	10951
		3069	4605	6113	7547	8974	10394	11809
4'–0" (48") PRECAST	1966	2561	2751	3820	4890	5961	7034	8107
		2693	4605	6113	7547	8974	10394	11809
4'–6" (54") PRECAST	1599	1969	2110	2931	3753	4576	5400	6224
		2189	4375	6113	7547 (7)	8672	10294	11809
5'–4" (64") PRECAST	1217	1349	1438	1999	2560	3123	3686	4249
		1663	2090	3365	7547 (38)	7342 (18)	8733 (18)	10127 (18)
5'–10" (70") PRECAST	1062	1105	1173	1631	2090	2549	3009	3470
		1451	2622	4360	7168 (64)	6036 (18)	7181 (18)	8328 (18)
6'–6" (78") PRECAST	908	1238	2177	3480	3031	3707	4383	5061
		1238	2177	3480	5381	8360	10394 (21)	8825 (14)
7'–6" (90") PRECAST	743	1011	1729	2632	2205	2698	3191	3685
		1011	1729	2661	3898	5681	8467 (44)	6472 (13)
9'–4" (112") PRECAST	554	699	1160	1625	2564	3486	2818	3302
		752	1245	1843	2564	3486	4705 (27)	6390 (47)
10'–6" (126") PRECAST	475	535	890	1247	2093	2777	2163	2536
		643	1052	1533	2093	2781	3643 (38)	4754 (68)
11'–4" (136") PRECAST	362	582	945	1366	1846	2423	3127	4006
		582	945	1366	1846	2423	3127	4006
12'–0" (144") PRECAST	337	540	873	1254	1684	2193	2805	3552
		540	873	1254	1684	2193	2805	3552
13'–4" (160") PRECAST	296	471	755	1075	1428	1838	2316	2883
		471	755	1075	1428	1838	2316	2883
14'–0" (168") PRECAST	279	424	706	1002	1326	1697	2127	2630
		442	706	1002	1326	1697	2127	2630
14'–8" (176") PRESTRESSED	N.R.	NR	NR	NR	NR	NR	NR	NR
		458	783	1370	1902	2245	2517	2712
15'–4" (184") PRESTRESSED	N.R.	NR	NR	NR	NR	NR	NR	NR
		412	710	1250	1733	2058	2320	2513
17'–4" (208") PRESTRESSED	N.R.	NR	NR	NR	NR	NR	NR	NR
		300	548	950	1326	1609	1849	2047
19'–4" (232") PRESTRESSED	N.R.	NR	NR	NR	NR	NR	NR	NR
		235	420	750	1037	1282	1515	1716
21'–4" (256") PRESTRESSED	N.R.	NR	NR	NR	NR	NR	NR	NR
		180	340	598	845	1114	1359	1468
22'–0" (264") PRESTRESSED	N.R.	NR	NR	NR	NR	NR	NR	NR
		165	315	550	784	1047	1285	1399
24'–0" (288") PRESTRESSED	N.R.	NR	NR	NR	NR	NR	NR	NR
		129	250	450	654	884	1092	1222

(#) THE NUMBERS IN PARENTHESIS ARE PERCENT REDUCTIONS FOR GRADE 40 FIELD ADDED REBAR.

SAFE UPLIFT LOADS FOR 8" PRECAST & PRESTRESSED U-LINTELS

LENGTH \ TYPE	SAFE LOAD - POUNDS PER LINEAR FOOT							
	8F8–1T	8F12–1T	8F16–1T	8F20–1T	8F24–1T	8F28–1T	8F32–1T
	8F8–2T	8F12–2T	8F16–2T	8F20–2T	8F24–2T	8F28–2T	8F32–2T
3'–6" (42") PRECAST	1569	2655	3524	4394	5263	6132	7001
	1569	2655	3524	4394	5263	6132	7001
4'–0" (48") PRECAST	1363	2305	3060	3815	4570	5325	6079
	1363	2305	3060	3815	4570	5325	6079
4'–6" (54") PRECAST	1207	2040	2707	3375	4043	4711	5379
	1207	2040	2707	3375	4043	4711	5379
5'–4" (64") PRECAST	1016	1715 (11)	2276 (4)	2838	3399	3961	4522
	1016	1715	2276	2838	3399	3961	4522
5'–10" (70") PRECAST	909	1567 (18)	2080 (13)	2593 (9)	3107 (6)	3620 (4)	4133 (3)
	929	1567	2080	2593	3107	3620	4133
6'–6" (78") PRECAST	835 (13)	1407 (26)	1868 (21)	2329 (18)	2790 (16)	3251 (14)	3712 (12)
	835	1407	1868	2329	2790	3251	3712
7'–6" (90") PRECAST	727 (28)	1065 (36)	1624 (21)	2025 (18)	2426 (16)	2827 (25)	3228 (24)
	727	1224	1624	2025	2426	2827	3228
9'–4" (112") PRECAST	591	708 (25)	1136 (24)	1474 (24)	1815 (24)	2157 (24)	2500 (24)
	591	862	1318	1643	1969	2294	2619
10'–6" (126") PRECAST	530	575 (24)	916 (23)	1188 (23)	1461 (23)	1736 (23)	2011 (23)
	530	695	1180 (8)	1472 (4)	1763 (2)	2055	2346
11'–4" (136") PRECAST	474	504 (23)	800 (22)	1037 (22)	1274 (22)	1513 (23)	1753 (22)
	494	607	1042 (16)	1372 (11)	1643 (8)	1915 (6)	2187 (5)
12'–0" (144") PRECAST	470 (8)	458 (23)	724 (21)	938 (20)	1153 (20)	1369 (22)	1585 (22)
	470	550	940 (16)	1302 (12)	1560 (10)	1818 (11)	2075 (10)
13'–4" (160") PRECAST	418 (13)	386 (23)	607 (20)	785 (20)	964 (20)	1143 (21)	1323 (21)
	428	460	780 (8)	1159 (11)	1418 (10)	1653 (16)	1887 (17)
14'–0" (168") PRECAST	384 (16)	358 (21)	560 (20)	724 (20)	889 (20)	1054 (20)	1220 (20)
	410	425	717 (8)	1063 (11)	1358 (10)	1582 (20)	1807 (21)
14'–8" (176") PRESTRESSED	239	334 (21)	520 (20)	672 (20)	825 (20)	978 (20)	1131 (20)
	246	395	663 (8)	980 (20)	1303 (20)	1518 (20)	1734 (24)
15'–4" (184") PRESTRESSED	224	313 (20)	486 (20)	627 (20)	769 (20)	911 (20)	1054 (20)
	230	368	616 (8)	908 (20)	1240 (20)	1460 (21)	1688 (26)
17'–4" (208") PRESTRESSED	187	263 (18)	405 (20)	521 (21)	638 (21)	756 (21)	873 (21)
	192	306	506 (8)	740 (18)	1005 (21)	1271 (21)	1473 (21)
19'–4" (232") PRESTRESSED	162	229 (17)	348 (20)	447 (20)	547 (20)	647 (20)	747 (20)
	166	263	429 (8)	623 (18)	841 (18)	1059 (18)	1227 (20)
21'–4" (256") PRESTRESSED	142	204 (16)	307 (21)	393 (21)	480 (21)	568 (24)	655 (24)
	142	232	373 (7)	537 (17)	721 (21)	905 (24)	1048 (28)
22'–0" (264") PRESTRESSED	137	197 (15)	295 (22)	379 (23)	462 (23)	546 (23)	630 (23)
	137	223	358 (7)	513 (17)	688 (24)	863 (28)	999 (28)
24'–0" (288") PRESTRESSED	124	179 (14)	267 (21)	342 (21)	416 (21)	492 (23)	567 (23)
	124	202	319 (7)	455 (16)	606 (23)	757 (27)	876 (27)

SAFE GRAVITY LOADS FOR 8" PRECAST w/ 2" RECESS DOOR U-LINTELS

LENGTH \ TYPE	8RU6	SAFE LOAD - POUNDS PER LINEAR FOOT						
		8RF6–0B	8RF10–0B	8RF14–0B	8RF18–0B	8RF22–0B	8RF26–0B	8RF30–0B
		8RF6–1B	8RF10–1B	8RF14–1B	8RF18–1B	8RF22–1B	8RF26–1B	8RF30–1B
4'–4" (52") PRECAST	1635	1749	3355	3280	4349	5421	6493	7567
		1891	3699	5206	6639	8060	9479	10893
4'–6" (54") PRECAST	1494	1596	3063	2992	3968	4946	5924	6904
		1756	3699	5206	6639	8060	9479	10893
5'–8" (68") PRECAST	866	920	1770	1716	2277	2839	3402	3966
		1167	2481	4567	6389	8060 (24)	7917 (18)	9311 (18)
5'–10" (70") PRECAST	810	859	1653	1600	2124	2649	3174	3700
		1113	2342	4242	6639 (18)	8060 (24)	7402 (18)	8706 (18)
6'–8" (80") PRECAST	797	901	1825	3120	5048	7747	9448	7360
		901	1825	3120	5048	7915	9479	10893 (33)
7'–6" (90") PRECAST	669	755	1490	2459	3776	5743	7239	5623
		755	1490	2459	3776	5743	8998 (18)	10893 (44)
9'–8" (116") PRECAST	411	466	999	1568	2253	3129	4091	3146
		526	999	1568	2253	3129	4150	5891 (47)

(#) THE NUMBERS IN PARENTHESIS ARE PERCENT REDUCTIONS FOR GRADE 40 FIELD ADDED REBAR.

SAFE UPLIFT LOADS FOR 8" PRECAST w/ 2" RECESS DOOR U-LINTELS

LENGTH \ TYPE	SAFE LOAD - POUNDS PER LINEAR FOOT						
	8RF6–1T	8RF10–1T	8RF14–1T	8RF18–1T	8RF22–1T	8RF26–1T	8RF30–1T
	8RF6–2T	8RF10–2T	8RF14–2T	8RF18–2T	8RF22–2T	8RF26–2T	8RF30–2T
4'–4" (52") PRECAST	905	1668	2362	3056	3751	4445	5140
	905	1668	2362	3056	3751	4445	5140
4'–6" (54") PRECAST	867	1604	2272	2939	3607	4275	4943
	867	1604	2272	2939	3607	4275	4943
5'–8" (68") PRECAST	675	1269 (8)	1797	2326 (8)	2854 (8)	3382	3911
	675	1269	1797	2326	2854	3382	3911
5'–10" (70") PRECAST	655	1207 (16)	1746 (11)	2259 (11)	2773 (8)	3286 (8)	2799 (17)
	655	1233	1746	2259	2773	3286	2799
6'–8" (80") PRECAST	570	929 (16)	1530 (22)	1980 (18)	2429 (16)	2879 (16)	3329 (14)
	570	1080	1530	1980	2429	2879	3329
7'–6" (90") PRECAST	506	742 (14)	1364 (28)	1765 (21)	2166 (20)	2567 (24)	2968 (23)
	506	898	1364	1765	2166	2567	2968
9'–8" (116") PRECAST	395	468 (10)	884 (23)	1222 (23)	1540 (24)	1859 (24)	2180 (24)
	395	560	1072	1386	1701	2016	2331

FIND US ON FACEBOOK & HOUZZ AT MJS CUSTOM HOME DESIGNS

Lintel Plan

SCALE: 1/4" = 1'-0"

GENERAL NOTES

1. Provide full mortar bed and head joints.
2. Shore filled lintels as required.
3. Installation of lintel must comply with the architectural and/or structural documents.
4. U–Lintels are manufactured with 5 1/2" long notches at the ends to accomodate vertical cell reinforcing and grouting.
5. Reference the CAST–CRETE Load Deflection Graph brochure for lintel deflection information.
6. Bottom field added rebar to be located at the bottom of the lintel cavity.
7. 7/32" diameter wire stirrups are welded to the bottom steel for mechanical anchorage.
8. Cast–in–place concrete may be provided in composite lintel in lieu of concrete masonry units.
9. Safe load rating based on rational design analysis per ACI 318 and ACI 530
10. The exterior surface of lintels installed in exterior concrete masonry walls shall have a coating of stucco applied in accordance with ASTM C–296 or other approved coating.
11. Lintels loaded simultaneously with vertical (gravity or uplift) and horizontal (lateral) loads should be checked for the combined loading with the following equation:

$$\frac{\text{Applied vertical load}}{\text{Safe vertical load}} + \frac{\text{Applied horizontal load}}{\text{Safe horizontal load}} \leq 1.0$$

12. Additional lateral load capacity can be obtained by the designer by providing additional reinforced concrete masonry above the lintel. See detail at right:

SAFE LOAD TABLE NOTES

1. All values based on minimum 4 inch nominal bearing. Exception: Safe loads for unfilled lintels must be reduced by 20% if bearing length is less than 6 1/2 inches.
2. N.R. = Not Rated
3. Safe loads are superimposed allowable loads.
4. Safe loads based on grade 40 or grade 60 field rebar.
5. One #7 rebar may be substituted for two #5 rebars in 8" lintels only
6. The designer may evaluate concentrated loads from the safe load tables by calculating the maximum resisting moment and shear at d–away from face of support.
7. For composite lintel heights not shown, use safe load from next lower height shown.
8. For lintels lengths not shown, use safe load from next longest length shown
9. All safe loads in units of pounds per linear foot
10. All safe loads based on simply supported span.
11. The number in the the parenthesis indicates the percent reduction for grade 40 field added rebar. Example 7'–6" lintel type 8F32–1B safe gravity load = 6472.

MATERIALS

1. f'c 8" precast lintel = 4000 psi
2. f'c prestressed lintel = 6000 psi
3. Grout per ASTM C476 f'g = 3000 psi w/ maximum 3/8 inch aggregate & 8 to 11 inch slump
4. Concrete Masonry Units (CMU) per ASTM C90 w/minimum net area compressive strength = 1900 psi
5. Rebar per ASTM A615 grade 60
6. Prestressing strand per ASTM A416 grade 270 low relaxation3
7. Mortar per ASTM C270 type M or S

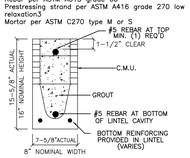

TYPE DESIGNATION

F = FILLED WITH GROUT / U = UNFILLED

QUANTITY OF #5 REBAR AT BOTTOM OF LINTEL CAVITY

8F16–1B/1T

QUANTITY OF #5 REBAR AT TOP

NOMINAL HEIGHT

NOMINAL WIDTH

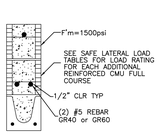

NOTE:

1. ALL LINTELS OVER 9'-0" IN LENGTH NEED TO BE SHORED DURING GROUTING. CONTRACTOR SHALL FOLLOW PRECAST MANUFACTURER'S RECOMMENDATIONS REGARDING THE SHORING OF GROUTED LINTELS
2. INSTALLATION AND REMOVAL OF SHORING FOR PRE-CAST LINTELS NEED TO FOLLOW LINTEL MANUFACTURER'S SPECIFICATIONS AT ALL TIMES. AT A MINIMUM, ALL PRE-STRESSED LINTELS 14'-0" IN LENGTH OR LONGER WILL NEED TO BE SHORED WHILE CMU BLOCK IS BEING LAID AND BEFORE BOND GROUT IS POURED. SHORING WILL CONSIST OF 2x4's NAILED TOGETHER TO CREATE AN "L" OR "T" SHAPE COLUMN, AND WILL BE INSTALLED UNDERNEATH THE PRE-STRESSED LINTEL @ 8'-0" O.C. MAX. INSTALL COLUMN TO ENSURE EQUAL SUPPORT SPACING.

THOMPSON ENGINEERING GROUP, INC.
4401 Vineland Road Suite #E Orlando, FL 32811
Ph: (407) 734-1459
Fax: (407) 734-1790
www.teg1.com

MJS designers group
residential-commercial-architecture
815 Orienta Ave., Suite #1040
Altamonte Springs, Fl. 32701
Ph: (407) 629-6711
Fax: (407) 629-6776
www.mjsdesignersgroup.com

AIBD

GOBA GREATER ORLANDO BUILDERS ASSOCIATION

4-Unit: Rear Load Detached
Models: Tyler, Jackson, Grant & Monroe
Building Pad #XX
Lot# XX-XX, Subdivision
Street Address
City, State, Zip Code

A division of Park Square Enterprises Inc.
5200 Vineland Rd. Suite #200
Orlando, Fl. 32811
Phone: (407) 529-3000

Park Square HOMES

ISSUE DATE	02/15/2023
REVISIONS	
PROJECT:	22-1148
SCALE:	AS NOTED
DRAWN BY:	M.C.
DESIGNED BY:	MJS

LINTEL PLAN
6 UNIT
S2

Design f:\Users\Design1\OneDrive - Thompson Engineering Group\Desktop\4-Unit\dwg Files\S2 Lintel Plan.dwg
Jul 26, 2023, 12:59pm

CONNECTOR SCHEDULE

CONNECT. TYPE	SIMPSON DESCRIPTION	SIMPSON FASTENERS PER CONNECTOR	MAX. UPLIFT	LAT. LDS. F1 / F2
4	HETA20	14-10d x 1½"	1,810	65 / 960
5	DETAL20	18-10d x 1½"	2,480	2000/ 1370
20	H3	RFT: 4-8d / PLT: 4-8d	455	125 / 160
21	H1	RFT:6-8dx1½"/PLT:4-8d	475	485 / 165
22	H10A	RFT: 8-8d x 1½"	1010	660/550
		PLT: 8-8d x 1½"		
23	LUS26	HDR: 4-10d/JST: 4-10d	935	N/A
24	H7	RFT / TRS: 4-8d	985	400 / N/A
		PLT / STD: 10-8d		
26	H2.5	RFT:5-8d / PLT: 5-8d	415	150 / 150
34	A34	H:4-8dx1½"/P:4-8dx1½"	365	280 / 303
35	A35F	H:4-8dx1½"/P:4-8dx1½"	440	440 / N/A
37	MTS12	14-10d	1,000	N/A
38	MTS16	14-10d	1,000	N/A
39	MTS30	14-10d	1000	N/A
43	LSTA12	10-10d	905	N/A
45	ST18	14-16d	1,200	N/A
47	LSTA24	18-10d	1,295	N/A
71	MSTA36	26-10d	2,135	N/A
72	MSTC66	64-16d SINKERS	5,495	N/A
79	SP1	STD:6-10d / PLT:4-10d	535	560 / 260
80	SP2	STD:6-10d / PLT:6-10d	605	560 / 260
81	SPH4,6,8	12-10d x 1½"	885	N/A
90	ABU66	12-16d	2,240	N/A
89	CB66	(2) 7/8" BOLTS	2,300	985
92	ABU44	12-16d	2,200	N/A
93	AC6 (MAX)	28-16d	1,815	1,070
94	AC4 (MAX)	28-16d	1,815	1,070
95	HTS20	20-10d	1,450	N/A
96	HD8A	SILL: 7/8" BOLT	7,910	N/A
		STUD:(3) 7/8"X5½" BOLTS		
97	MTSM16	BLOCK: 4-¼"X2¼" TC JOIST : 7-10d	860	N/A
98	HTT4	SILL: 7/8" BOLT	4,235	N/A
		STRAP: 18-16d		
99	A35	H:4-8dx1½"/P:4-8dx1½"	440	440 / N/A
102	HTT5	7/8" BOLT/ 26-10d	4,275	N/A
103	VGTR/L	32-SDS¼"X3"/(2) 7/8" BLT	3,990	N/A
104	HDU8-SDS2.5	7/8" BLT/20-SDS ¼"x2½"	5,020	N/A
110	HCP2	12-10d x 1½"	520	260 / N/A
167	HHUS46	H:14-16d/J:6-16d	1,550	N/A
168	U46	H:8-10d/J:4-10d	710	N/A
181	HUS26	20-16d	1,550	N/A
184	HUC28-2	H:14-16d/J:4-10d	1,085	N/A
214	HUC212-3	HD:(22)0.162"X3½" TAPCON BM: (10) 0.148x3"	1,895	N/A
215	HGUS210-2	HDR:46-16d/JST:10-16d	2,720	N/A
216	HUS412	BLOCK: 10-¼"X1½" TC JOIST : 10-16d	3,240	N/A
217	HUS212-2	BLOCK: 10-¼"X1½" TC JOIST : 10-16d	2,630	N/A
219	MBHA412	H:1-ATR3/4X8 TOP&FACE JOIST: 18-10d	3,145	N/A
220	N/A	N/A	1,620	N/A
226	MBHA4.75/12	HDR : (2) 3/4" φ x 8" JOIST : 18-10d	2,160	N/A
231	MBHA3.56/16	HDR : (2) 3/4" φ x 8" JOIST : 18-10d	3,450	N/A
232	MBHA5.50/16	HDR : (2) 3/4" φ x 8" JOIST : 18-10d	3,450	N/A
240	H16	R:2-10dx1½"P:10-10dx1½"	1,470	480 / N/A
241	LGT2	30-16d-sinker	2000	1015 / 440
301	MGT	(1) 5/8"BLTS./GIR: 22-10d	3,965	N/A
302	HGT-2 or 3	LTL:3/4"BLTS./GIR: 8-10d	6485	N/A
303	HGT-4	LTL:3/4"BLTS./GIR: 16-10d	9,250	N/A
401	SUR/L414	FACE:18-16d/JST:8-16d	1,700	N/A
T	CONNECTORS TO BE SPECIFIED & PROVIDED BY TRUSS MANUFACTURERS			

NOTES

1. TYPICAL ROOF GABLE OVERHANG TO BE 12" UNLESS OTHERWISE NOTED.

2. TYPICAL ROOF EAVES OVERHANG TO BE 16" UNLESS OTHERWISE NOTED.

3. PROVIDE AND INSTALL FLASHING AND ROOFING AS PER NATIONAL ROOFING AND SHEET METAL ASSOC.STANDARDS AND/ OR ACCEPTABLE INDUSTRY PRACTICE AND IN ACCORDANCE WITH 6TH EDITION (2017)FLORIDA RESIDENTIAL CODE.

4. ALL ROOF TRUSSES, GIRDERS, BEAMS, HEADERS, ETC. TO BE SIZE BY TRUSS MANUFACTURER OR FL. REG. ENG.

5. TRUSSES SHALL BE BRACED TO PREVENT ROTATION & PROVIDE LATERAL STABILITY KIN ACCORDANCE WITH THE REQUIREMENTS SPECIFIED IN THE CONSTRUCTION DOCUMENTS FOR BUILDING & ON THE INDIVIDUAL TRUSS DESIGN DRAWINGS IN THE ABSENCE OF SPECIFIC BRACING REQUIREMENTS, TRUSSES SHALL BE BRACED IN ACCORDANCE WITH TPI/WTCA BCSI 1.

6. REFER TO TRUSS MANUFACTURERS DRAWINGS FOR TRUSS PLACEMENT & TRUSS TO TRUSS CONNECTIONS.

7. ROOF UNDERLAYMENT TO BE USED IS 30 LBS. SYNTHETIC FELT.

8. SHINGLE ROOF : UNDERLAYMENT TO BE INSTALLED IAW FBCR 2020, 7TH EDITION R905.1.1. UNDERLAYMENT MATERIALS REQUIRED TO COMPLY WITH ASTM D226, D1970, D4869 AND D6757 SHALL BEAR A LABEL INDICATING COMPLIANCE TO THE STANDARD DESIGNATION AND, IF APPLICABLE, TYPE CLASSIFICATION INDICATED IN TABLE R905.1.1. UNDERLAYMENT SHALL BE APPLIED AND ATTACHED IN ACCORDANCE WITH TABLE R905.1.1.

9. OFF RIDGE VENTS MAXIMUM OPENING SIZES:
- LOMANCO: (2) 9½" DIA.CIRCLES
-MILLENNIUM METAL: 2½"x46" HOLE

COMPONENT & CLADDING DESIGN WIND PRESSURES

SEE PLAN DESIGN WIND PRESSURE

+ XXX	ULTIMATE DESIGNED POSITIVE PRESSURE
- XXX	ULTIMATE DESIGNED NEGATIVE PRESSURE

NOTE: DESIGN PRESSURES BASED ULTIMATE WIND SPEED TO OBTAIN NOMINAL "ASD" WIND PRESSURES MULTIPLY VALUES SHOWN BY A FACTOR OF 0.6

FIELD REPAIR NOTES

1- MISSED FOOTING DOWELS MAY BE SUBSTITUTED W/ A STRAIGHT #5 REBAR SET IN A 3/4" DIA. x 6" DEEP HOLE FILLED W/ UNITEX PROPOXY 300 OR SIMPSON SET OR ETF ADHESIVES.

2- BLOCK WALL OVERHANGING SLAB CONDITION: UP TO 7/8" - NO REPAIR NECESSARY 7/8" TO 1½" - ADD FILLED CELL (NO VERTICAL STEEL) MIDPOINT OF WALL BETWEEN EXISTING FILLED CELLS (WITH STEEL) IN AREAS AFFECTED. 1½" + - REQUIRE SPECIAL ENGINEERING LETTER.

3- PENETRATION OF PLUMBING PIPES/DRYER VENTS THRU PLATES OF A LOAD BEARING WALL MAY OCCUR PROVIDED DBL. STUDS ARE ADDED ON EITHER SIDE OF PENETRATION WITHIN 3" AND TRUSS/FLOOR TRUSS IS NO CLOSER THAN 3" FROM PENETRATION. ADD (1) MTS12 @ TOP AND BOTTOM PLATE

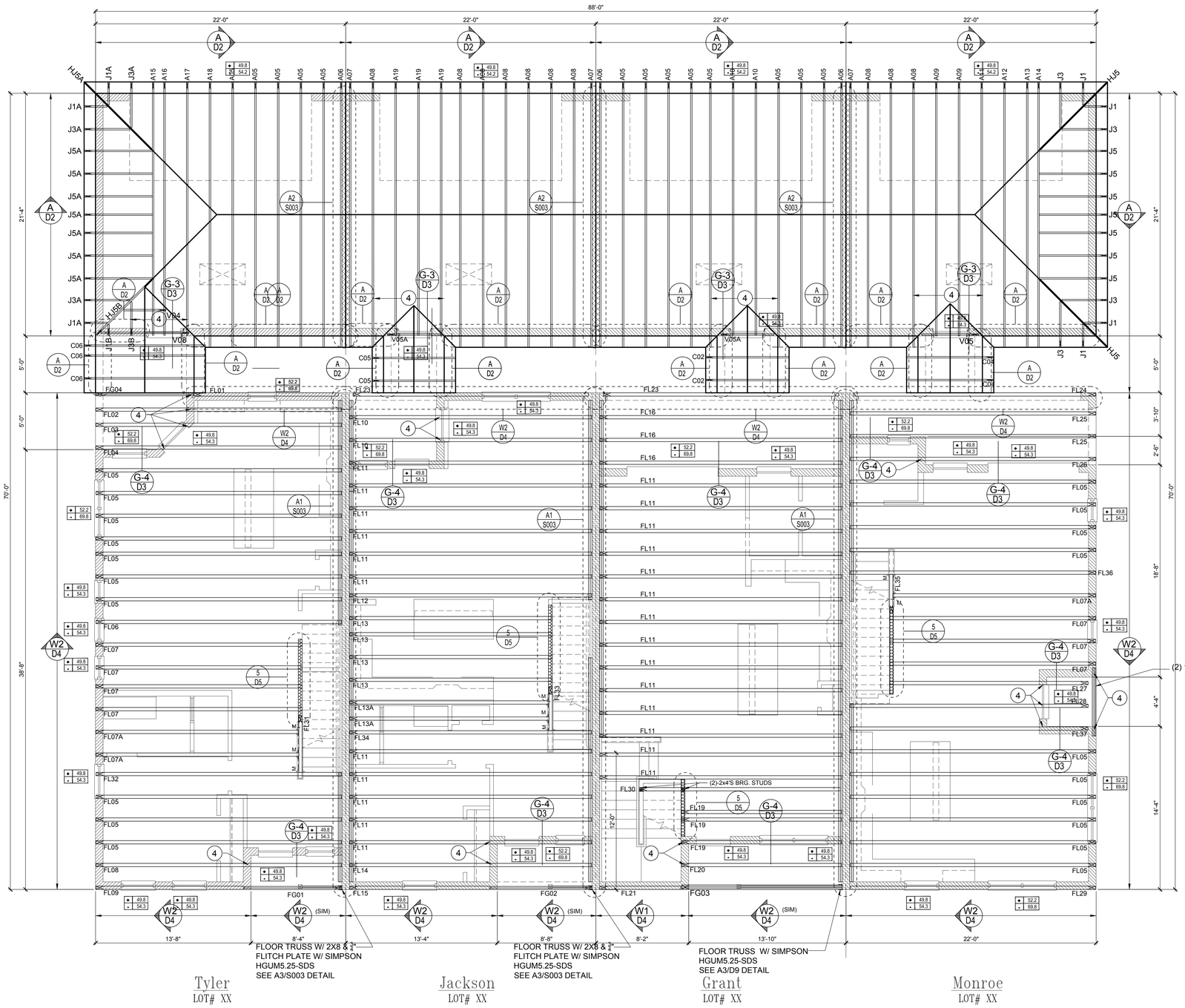

Floor Trusses "A"

SCALE 1/4" = 1'-0"

THOMPSON ENGINEERING GROUP, INC.
4401 Vineland Road Suite #J Orlando, FL 32811
Ph: (407) 734-1459
Fax: (407) 734-1790
www.tegfl.com

MJS designers group
residential-commercial-architecture
815 Orienta Ave., Suite #1040
Altamonte Springs, Fl. 32701
Ph: (407) 629-6711
Fax: (407) 629-6776
www.mjsdesignersgroup.com

ABD

GOBA
GREATER ORLANDO BUILDERS ASSOCIATION

4-Unit: Rear Load Detached

Models: Tyler, Jackson, Grant & Monroe

Building Pad #XX
Lot# XX-XX, Subdivision
Street Address
City, State, Zip Code

A division of Park Square Enterprises Inc.
5200 Vineland Rd. Suite #200
Orlando, Fl. 32811
Phone: (407) 529-3000

Park Square HOMES

ISSUE DATE	02/15/2023
REVISIONS	
PROJECT:	22-1148
SCALE:	AS NOTED
DRAWN BY:	M.C.
DESIGNED BY:	MJS

FLOOR PLAN
5 UNIT

S3

Design1\C:\Users\Design1\OneDrive - Thompson Engineering Group\Desktop\4-Unit\dwg Files\S3 Floor Plan (Elev A).dwg
Jul 26, 2023,12:59pm

CONNECTOR SCHEDULE

CONNECT. TYPE	SIMPSON DESCRIPTION	SIMPSON FASTENERS PER CONNECTOR	MAX. UPLIFT	LAT. LDS. F1 / F2
4	HETA20	14-10d x 1½"	1,810	65 / 960
5	DETAL20	18-10d x 1½"	2,480	2000/ 1370
20	H3	RFT: 4-8d / PLT: 4-8d	455	125 / 160
21	H1	RFT:6-8dx1½"/PLT:4-8d	475	485 / 165
22	H10A	RFT: 8-8d x 1½"	1010	660/550
		PLT: 8-8d x 1½"		
23	LUS26	HDR: 4-10d/JST: 4-10d	935	N/A
24	H7	RFT / TRS: 4-8d	985	400 / N/A
		PLT / STD: 10-8d		
26	H2.5	RFT:5-8d / PLT: 5-8d	415	150 / 150
34	A34	H:4-8dx1½"/P:4-8dx1½"	365	280 / 303
35	A35F	H:4-8dx1½"/P:4-8dx1½"	440	440 / N/A
37	MTS12	14-10d	1,000	N/A
38	MTS16	14-10d	1,000	N/A
39	MTS30	14-10d	1000	N/A
43	LSTA12	10-10d	905	N/A
45	ST18	14-16d	1,200	N/A
47	LSTA24	18-10d	1,295	N/A
71	MSTA36	26-10d	2,135	N/A
72	MSTC66	64-16d SINKERS	5,495	N/A
79	SP1	STD:6-10d / PLT:4-10d	535	560 / 260
80	SP2	STD:6-10d / PLT:6-10d	605	560 / 260
81	SPH4,6,8	12-10d x 1½"	885	N/A
90	ABU66	12-16d	2,240	N/A
89	CB66	(2) 7/8" BOLTS	2,300	985
92	ABU44	12-16d	2,200	N/A
93	AC6 (MAX)	28-16d	1,815	1,070
94	AC4 (MAX)	28-16d	1,815	1,070
95	HTS20	20-10d	1,450	N/A
96	HD8A	SILL: 7/8" BOLT	7,910	N/A
		STUD:(3) 7/8"X5½" BOLTS		
97	MTSM16	BLOCK: 4-¼"X2¼" TC JOIST : 7-10d	860	N/A
98	HTT4	SILL: 7/8" BOLT	4,235	N/A
		STRAP: 18-16d		
99	A35	H:4-8dx1½"/P:4-8dx1½"	440	440 / N/A
102	HTT5	7/8" BOLT/ 26-10d	4,275	N/A
103	VGTR/L	32-SDS¼"X3"/(2) 7/8" BLT	3,990	N/A
104	HDU8-SDS2.5	7/8" BLT/20-SDS ¼"x2½"	5,020	N/A
110	HCP2	12-10d x 1½"	520	260 / N/A
167	HHUS46	H:14-16d/J:6-16d	1,550	N/A
168	U46	H:8-10d/J:4-10d	710	N/A
181	HUS26	20-16d	1,550	N/A
184	HUC28-2	H:14-16d/J:4-10d	1,085	N/A
214	HUC212-3	HD:(22)0.162"X3½" TAPCON BM: (10) 0.148x3"	1,895	N/A
215	HGUS210-2	HDR:46-16d/JST:10-16d	2,720	N/A
216	HUS412	BLOCK: 10-¼"X1½" TC JOIST : 10-16d	3,240	N/A
217	HUS212-2	BLOCK: 10-¼"X1½" TC JOIST : 10-16d	2,630	N/A
219	MBHA412	H:1-ATR3/4X8 TOP&FACE	3,145	N/A
		JOIST: 18-10d		
220	N/A	N/A	1,620	N/A
226	MBHA4.75/12	HDR : (2) 3/4" φ x 8" JOIST : 18-10d	2,160	N/A
231	MBHA3.56/16	HDR : (2) 3/4" φ x 8" JOIST : 18-10d	3,450	N/A
232	MBHA5.50/16	HDR : (2) 3/4" φ x 8" JOIST : 18-10d	3,450	N/A
240	H16	R:2-10dx1½"P:10-10dx1½"	1,470	480 / N/A
241	LGT2	30-16d-sinker	2000	1015 / 440
301	MGT	(1) 5/8"BLTS./GIR: 22-10d	3,965	N/A
302	HGT-2 or 3	LTL:3/4"BLTS./GIR: 8-10d	6485	N/A
303	HGT-4	LTL:3/4"BLTS./GIR: 16-10d	9,250	N/A
401	SUR/L414	FACE:18-16d/JST:8-16d	1,700	N/A
T	CONNECTORS TO BE SPECIFIED & PROVIDED BY TRUSS MANUFACTURERS			

NOTES

1. TYPICAL ROOF GABLE OVERHANG TO BE 12" UNLESS OTHERWISE NOTED.

2. TYPICAL ROOF EAVES OVERHANG TO BE 16" UNLESS OTHERWISE NOTED.

3. PROVIDE AND INSTALL FLASHING AND ROOFING AS PER NATIONAL ROOFING AND SHEET METAL ASSOC.STANDARDS AND/ OR ACCEPTABLE INDUSTRY PRACTICE AND IN ACCORDANCE WITH 6TH EDITION (2017)FLORIDA RESIDENTIAL CODE.

4. ALL ROOF TRUSSES, GIRDERS, BEAMS, HEADERS, ETC. TO BE SIZE BY TRUSS MANUFACTURER OR FL. REG. ENG.

5. TRUSSES SHALL BE BRACED TO PREVENT ROTATION & PROVIDE LATERAL STABILITY KIN ACCORDANCE WITH THE REQUIREMENTS SPECIFIED IN THE CONSTRUCTION DOCUMENTS FOR BUILDING & ON THE INDIVIDUAL TRUSS DESIGN DRAWINGS IN THE ABSENCE OF SPECIFIC BRACING REQUIREMENTS, TRUSSES SHALL BE BRACED IN ACCORDANCE WITH TPI/WTCA BCSI 1.

6. REFER TO TRUSS MANUFACTURERS DRAWINGS FOR TRUSS PLACEMENT & TRUSS TO TRUSS CONNECTIONS.

7. ROOF UNDERLAYMENT TO BE USED IS 30 LBS. SYNTHETIC FELT.

8. SHINGLE ROOF : UNDERLAYMENT TO BE INSTALLED IAW FBCR 2020, 7TH EDITION R905.1.1. UNDERLAYMENT MATERIALS REQUIRED TO COMPLY WITH ASTM D226, D1970, D4869 AND D6757 SHALL BEAR A LABEL INDICATING COMPLIANCE TO THE STANDARD DESIGNATION AND, IF APPLICABLE, TYPE CLASSIFICATION INDICATED IN TABLE R905.1.1. UNDERLAYMENT SHALL BE APPLIED AND ATTACHED IN ACCORDANCE WITH TABLE R905.1.1.

9. OFF RIDGE VENTS MAXIMUM OPENING SIZES:
- LOMANCO: (2) 9½" DIA.CIRCLES
-MILLENNIUM METAL: 2½"x46" HOLE

COMPONENT & CLADDING DESIGN WIND PRESSURES

SEE PLAN DESIGN WIND PRESSURE

+ XXX	ULTIMATE DESIGNED POSITIVE PRESSURE
- XXX	ULTIMATE DESIGNED NEGATIVE PRESSURE

NOTE: DESIGN PRESSURES BASED ULTIMATE WIND SPEED TO OBTAIN NOMINAL "ASD" WIND PRESSURES MULTIPLY VALUES SHOWN BY A FACTOR OF 0.6

FIELD REPAIR NOTES

1- MISSED FOOTING DOWELS MAY BE SUBSTITUTED W/ A STRAIGHT #5 REBAR SET IN A 3/4" DIA. x 6" DEEP HOLE FILLED W/ UNITEX PROPOXY 300 OR SIMPSON SET OR ETF ADHESIVES.

2- BLOCK WALL OVERHANGING SLAB CONDITION: UP TO 7/8" - NO REPAIR NECESSARY 7/8" TO 1½" - ADD FILLED CELL (NO VERTICAL STEEL) MIDPOINT OF WALL BETWEEN EXISTING FILLED CELLS (WITH STEEL) IN AREAS AFFECTED. 1½" + - REQUIRE SPECIAL ENGINEERING LETTER.

3- PENETRATION OF PLUMBING PIPES/DRYER VENTS THRU PLATES OF A LOAD BEARING WALL MAY OCCUR PROVIDED DBL. STUDS ARE ADDED ON EITHER SIDE OF PENETRATION WITHIN 3" AND TRUSS/FLOOR TRUSS IS NO CLOSER THAN 3" FROM PENETRATION. ADD (1) MTS12 @ TOP AND BOTTOM PLATE

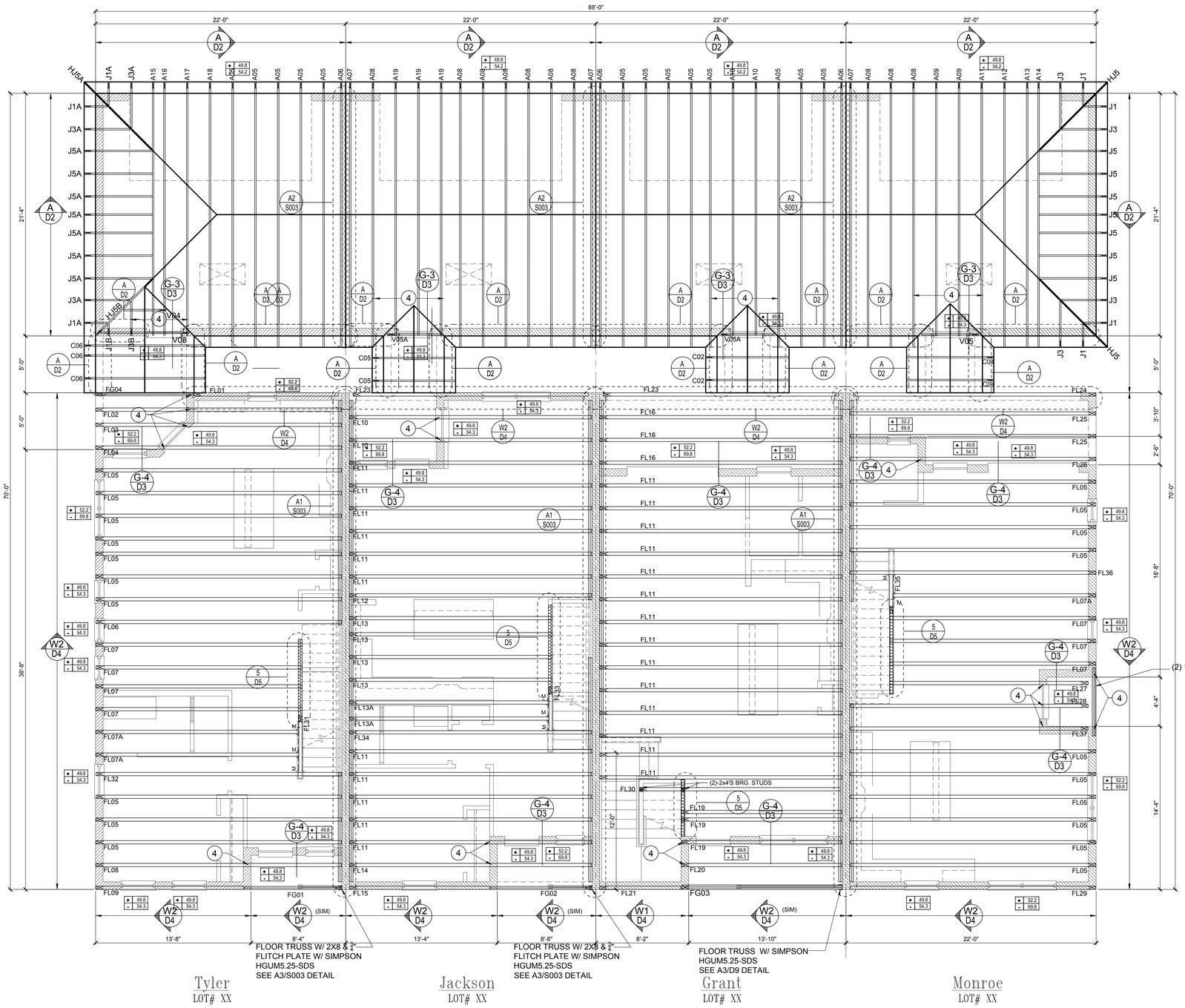

Floor Trusses "B"

SCALE 1/4" = 1'-0"

THOMPSON ENGINEERING GROUP, INC.
4401 Vineland Road Suite #J Orlando, FL 32811
Ph: (407) 734-1459
Fax: (407) 734-1790
www.tegfl.com

MJS designers group
residential-commercial-architecture
815 Orienta Ave., Suite #1040
Altamonte Springs, Fl. 32701
Ph: (407) 629-6711
Fax: (407) 629-6776
www.mjsdesignersgroup.com

ALBD

GOBA
GREATER ORLANDO BUILDERS ASSOCIATION

4-Unit: Rear Load Detached

Models: Tyler, Jackson, Grant & Monroe

Building Pad #XX
Lot# XX-XX, Subdivision
Street Address
City, State, Zip Code

A division of Park Square Enterprises Inc.
5200 Vineland Rd. Suite #200
Orlando, Fl. 32811
Phone: (407) 529-3000

Park Square HOMES

ISSUE DATE	02/15/2023
REVISIONS	
PROJECT:	22-1148
SCALE:	AS NOTED
DRAWN BY:	M.C.
DESIGNED BY:	MJS

FLOOR PLAN
5 UNIT

S3

Design1\C:\Users\Design1\OneDrive - Thompson Engineering Group\Desktop\4-Unit\dwg Files\S3 Floor Plan (Elev B).dwg
Jul 26, 2023,12:59pm

CONNECTOR SCHEDULE

CONNECT. TYPE	SIMPSON DESCRIPTION	SIMPSON FASTENERS PER CONNECTOR	MAX. UPLIFT	LAT. LDS. F1 / F2
4	HETA20	14-10d x 1½"	1,810	65 / 960
5	DETAL20	18-10d x 1½"	2,480	2000/ 1370
20	H3	RFT: 4-8d / PLT: 4-8d	455	125 / 160
21	H1	RFT:6-8dx1½"/PLT:4-8d	475	485 / 165
22	H10A	RFT: 8-8d x 1½"	1010	660/550
		PLT: 8-8d x 1½"		
23	LUS26	HDR: 4-10d/JST: 4-10d	935	N/A
24	H7	RFT / TRS: 4-8d	985	400 / N/A
		PLT / STD: 10-8d		
26	H2.5	RFT:5-8d / PLT: 5-8d	415	150 / 150
34	A34	H:4-8dx1½"/P:4-8dx1½"	365	280 / 303
35	A35F	H:4-8dx1½"/P:4-8dx1½"	440	440 / N/A
37	MTS12	14-10d	1,000	N/A
38	MTS16	14-10d	1,000	N/A
39	MTS30	14-10d	1000	N/A
43	LSTA12	10-10d	905	N/A
45	ST18	14-16d	1,200	N/A
47	LSTA24	18-10d	1,295	N/A
71	MSTA36	26-10d	2,135	N/A
72	MSTC66	64-16d SINKERS	5,495	N/A
79	SP1	STD:6-10d / PLT:4-10d	535	560 / 260
80	SP2	STD:6-10d / PLT:6-10d	605	560 / 260
81	SPH4,6,8	12-10d x 1½"	885	N/A
90	ABU66	12-16d	2,240	N/A
89	CB66	(2) 7/8" BOLTS	2,300	985
92	ABU44	12-16d	2,200	N/A
93	AC6 (MAX)	28-16d	1,815	1,070
94	AC4 (MAX)	28-16d	1,815	1,070
95	HTS20	20-10d	1,450	N/A
96	HD8A	SILL: 7/8" BOLT	7,910	N/A
		STUD:(3) 7/8"X5½" BOLTS		
97	MTSM16	BLOCK: 4-¼"X2¼" TC JOIST : 7-10d	860	N/A
98	HTT4	SILL: 7/8" BOLT	4,235	N/A
		STRAP: 18-16d		
99	A35	H:4-8dx1½"/P:4-8dx1½"	440	440 / N/A
102	HTT5	7/8" BOLT/ 26-10d	4,275	N/A
103	VGTR/L	32-SDS¼"X3"/(2) 7/8" BLT	3,990	N/A
104	HDU8-SDS2.5	7/8" BLT/20-SDS ¼"x2½"	5,020	N/A
110	HCP2	12-10d x 1½"	520	260 / N/A
167	HHUS46	H:14-16d/J:6-16d	1,550	N/A
168	U46	H:8-10d/J:4-10d	710	N/A
181	HUS26	20-16d	1,550	N/A
184	HUC28-2	H:14-16d/J:4-10d	1,085	N/A
214	HUC212-3	HD:(22)0.162"X3½" TAPCON BM: (10) 0.148x3"	1,895	N/A
215	HGUS210-2	HDR:46-16d/JST:10-16d	2,720	N/A
216	HUS412	BLOCK: 10-¼"X1½" TC JOIST : 10-16d	3,240	N/A
217	HUS212-2	BLOCK: 10-¼"X1½" TC JOIST : 10-16d	2,630	N/A
219	MBHA412	H:1-ATR3/4X8 TOP&FACE	3,145	N/A
		JOIST: 18-10d		
220	N/A	N/A	1,620	N/A
226	MBHA4.75/12	HDR : (2) 3/4" φ x 8" JOIST : 18-10d	2,160	N/A
231	MBHA3.56/16	HDR : (2) 3/4" φ x 8" JOIST : 18-10d	3,450	N/A
232	MBHA5.50/16	HDR : (2) 3/4" φ x 8" JOIST : 18-10d	3,450	N/A
240	H16	R:2-10dx1½"P:10-10dx1½"	1,470	480 / N/A
241	LGT2	30-16d-sinker	2000	1015 / 440
301	MGT	(1) 5/8"BLTS./GIR: 22-10d	3,965	N/A
302	HGT-2 or 3	LTL:3/4"BLTS./GIR: 8-10d	6485	N/A
303	HGT-4	LTL:3/4"BLTS./GIR: 16-10d	9,250	N/A
401	SUR/L414	FACE:18-16d/JST:8-16d	1,700	N/A
T	CONNECTORS TO BE SPECIFIED & PROVIDED BY TRUSS MANUFACTURERS			

NOTES

1. TYPICAL ROOF GABLE OVERHANG TO BE 12" UNLESS OTHERWISE NOTED.

2. TYPICAL ROOF EAVES OVERHANG TO BE 16" UNLESS OTHERWISE NOTED.

3. PROVIDE AND INSTALL FLASHING AND ROOFING AS PER NATIONAL ROOFING AND SHEET METAL ASSOC.STANDARDS AND/ OR ACCEPTABLE INDUSTRY PRACTICE AND IN ACCORDANCE WITH 6TH EDITION (2017)FLORIDA RESIDENTIAL CODE.

4. ALL ROOF TRUSSES, GIRDERS, BEAMS, HEADERS, ETC. TO BE SIZE BY TRUSS MANUFACTURER OR FL. REG. ENG.

5. TRUSSES SHALL BE BRACED TO PREVENT ROTATION & PROVIDE LATERAL STABILITY KIN ACCORDANCE WITH THE REQUIREMENTS SPECIFIED IN THE CONSTRUCTION DOCUMENTS FOR BUILDING & ON THE INDIVIDUAL TRUSS DESIGN DRAWINGS IN THE ABSENCE OF SPECIFIC BRACING REQUIREMENTS, TRUSSES SHALL BE BRACED IN ACCORDANCE WITH TPI/WTCA BCSI 1.

6. REFER TO TRUSS MANUFACTURERS DRAWINGS FOR TRUSS PLACEMENT & TRUSS TO TRUSS CONNECTIONS.

7. ROOF UNDERLAYMENT TO BE USED IS 30 LBS. SYNTHETIC FELT.

8. SHINGLE ROOF : UNDERLAYMENT TO BE INSTALLED IAW FBCR 2020, 7TH EDITION R905.1.1. UNDERLAYMENT MATERIALS REQUIRED TO COMPLY WITH ASTM D226, D1970, D4869 AND D6757 SHALL BEAR A LABEL INDICATING COMPLIANCE TO THE STANDARD DESIGNATION AND, IF APPLICABLE, TYPE CLASSIFICATION INDICATED IN TABLE R905.1.1 UNDERLAYMENT SHALL BE APPLIED AND ATTACHED IN ACCORDANCE WITH TABLE R905.1.1.

9. OFF RIDGE VENTS MAXIMUM OPENING SIZES:
- LOMANCO: (2) 9½" DIA.CIRCLES
-MILLENNIUM METAL: 2½"x46" HOLE

COMPONENT & CLADDING DESIGN WIND PRESSURES

SEE PLAN DESIGN WIND PRESSURE

+ XXX	ULTIMATE DESIGNED POSITIVE PRESSURE
- XXX	ULTIMATE DESIGNED NEGATIVE PRESSURE

NOTE: DESIGN PRESSURES BASED ULTIMATE WIND SPEED TO OBTAIN NOMINAL "ASD" WIND PRESSURES MULTIPLY VALUES SHOWN BY A FACTOR OF 0.6

FIELD REPAIR NOTES

1- MISSED FOOTING DOWELS MAY BE SUBSTITUTED W/ A STRAIGHT #5 REBAR SET IN A 3/4" DIA. x 6" DEEP HOLE FILLED W/ UNITEX PROPOXY 300 OR SIMPSON SET OR ETF ADHESIVES.

2- BLOCK WALL OVERHANGING SLAB CONDITION: UP TO 7/8" - NO REPAIR NECESSARY 7/8" TO 1½" - ADD FILLED CELL (NO VERTICAL STEEL) MIDPOINT OF WALL BETWEEN EXISTING FILLED CELLS (WITH STEEL) IN AREAS AFFECTED. 1½"+ - REQUIRE SPECIAL ENGINEERING LETTER.

3- PENETRATION OF PLUMBING PIPES/DRYER VENTS THRU PLATES OF A LOAD BEARING WALL MAY OCCUR PROVIDED DBL. STUDS ARE ADDED ON EITHER SIDE OF PENETRATION WITHIN 3" AND TRUSS/FLOOR TRUSS IS NO CLOSER THAN 3" FROM PENETRATION. ADD (1) MTS12 @ TOP AND BOTTOM PLATE

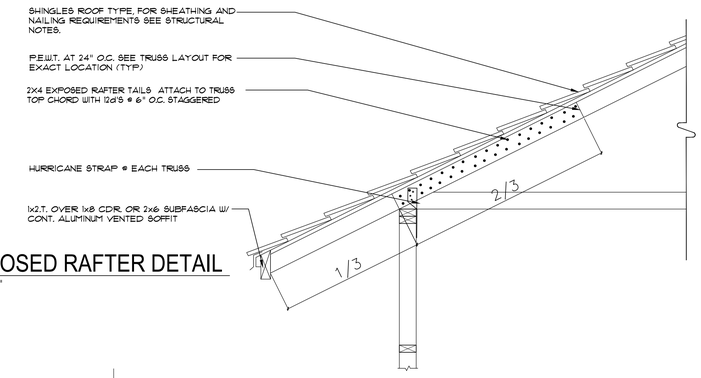

A1 S4 EXPOSED RAFTER DETAIL
1/2"= 1'-0"

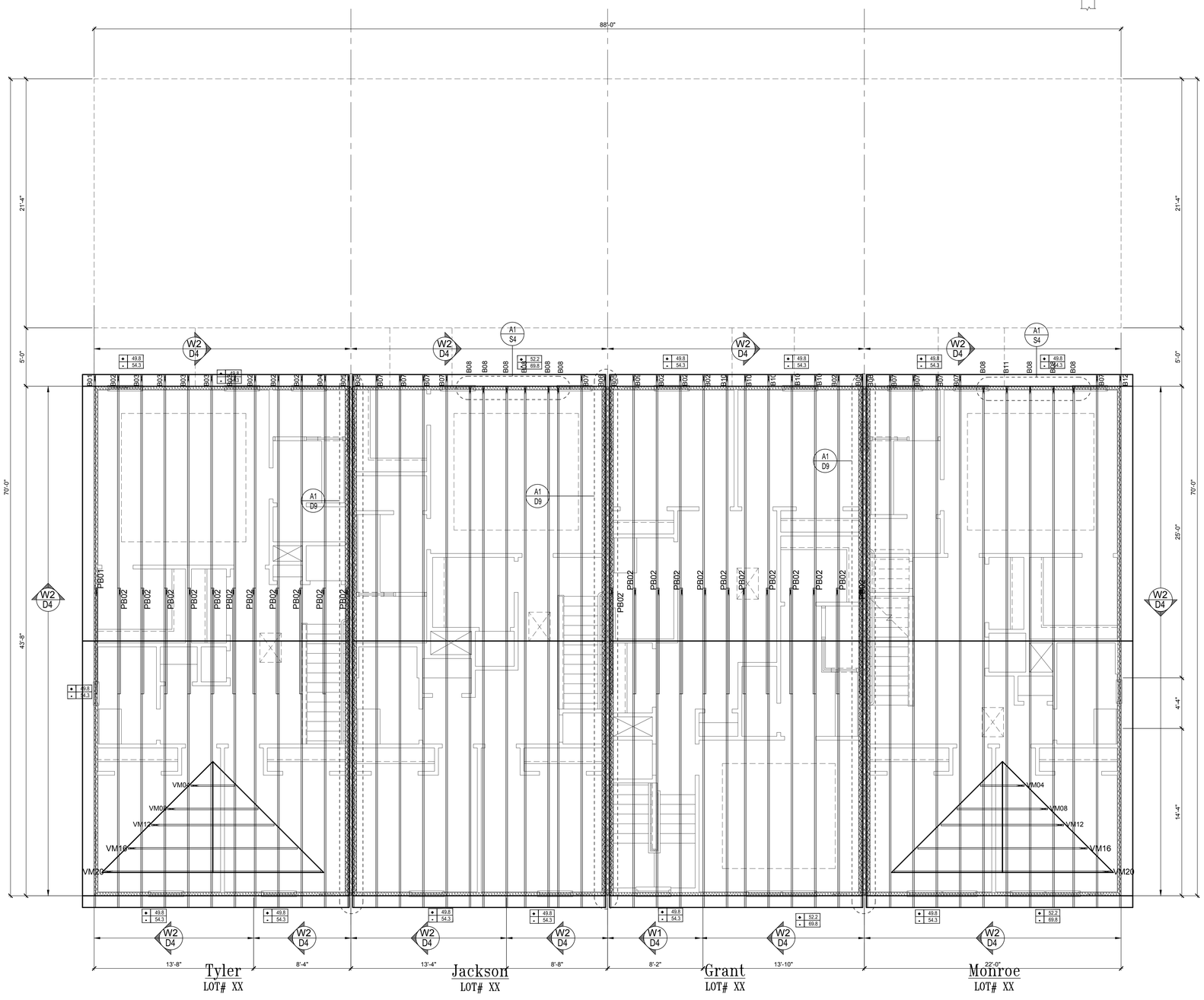

Roof Trusses "A"
SCALE: 1/4" = 1'-0"

THOMPSON ENGINEERING GROUP, INC.
4401 Vineland Road Suite #J Orlando, FL 32811
Ph: (407) 734-1459
Fax: (407) 734-1790
www.teg4.com

815 Orienta Ave., Suite #1040
Altamonte Springs, Fl. 32701
Ph: (407) 629-6711
Fax: (407) 629-6776
www.mjsdesignersgroup.com
designers group
residential-commercial-architecture

AIBD
GOBA GREATER ORLANDO BUILDERS ASSOCIATION

4-Unit: Rear Load Detached
Models: Tyler, Jackson, Grant & Monroe
Building Pad #XX
Lot# XX-XX, Subdivision
Street Address
City, State, Zip Code

A division of Park Square Enterprises Inc.
5200 Vineland Rd. Suite #200
Orlando, Fl. 32811
Phone: (407) 529-3000

ISSUE DATE	02/15/2023
REVISIONS	
PROJECT:	22-1148
SCALE:	AS NOTED
DRAWN BY:	M.C.
DESIGNED BY:	MJS

FLOOR PLAN
6 UNIT
S4

Design1C:\Users\Design1\OneDrive - Thompson Engineering Group\Desktop\4-Unit\dwg Files\S4 Roof Plan (Elev. A).dwg
Jul 26, 2023, 1:00pm

CONNECTOR SCHEDULE

CONNECT. TYPE	SIMPSON DESCRIPTION	SIMPSON FASTENERS PER CONNECTOR	MAX. UPLIFT	LAT. LDS. F1 / F2
4	HETA20	14-10d x 1½"	1,810	65 / 960
5	DETAL20	18-10d x 1½"	2,480	2000/ 1370
20	H3	RFT: 4-8d / PLT: 4-8d	455	125 / 160
21	H1	RFT:6-8dx1½"/PLT:4-8d	475	485 / 165
22	H10A	RFT: 8-8d x 1½"	1010	660/550
		PLT: 8-8d x 1½"		
23	LUS26	HDR: 4-10d/JST: 4-10d	935	N/A
24	H7	RFT / TRS: 4-8d	985	400 / N/A
		PLT / STD: 10-8d		
26	H2.5	RFT:5-8d / PLT: 5-8d	415	150 / 150
34	A34	H:4-8dx1½"/P:4-8dx1½"	365	280 / 303
35	A35F	H:4-8dx1½"/P:4-8dx1½"	440	440 / N/A
37	MTS12	14-10d	1,000	N/A
38	MTS16	14-10d	1,000	N/A
39	MTS30	14-10d	1000	N/A
43	LSTA12	10-10d	905	N/A
45	ST18	14-16d	1,200	N/A
47	LSTA24	18-10d	1,295	N/A
71	MSTA36	26-10d	2,135	N/A
72	MSTC66	64-16d SINKERS	5,495	N/A
79	SP1	STD:6-10d / PLT:4-10d	535	560 / 260
80	SP2	STD:6-10d / PLT:6-10d	605	560 / 260
81	SPH4,6,8	12-10d x 1½"	885	N/A
90	ABU66	12-16d	2,240	N/A
89	CB66	(2) 7/8" BOLTS	2,300	985
92	ABU44	12-16d	2,200	N/A
93	AC6 (MAX)	28-16d	1,815	1,070
94	AC4 (MAX)	28-16d	1,815	1,070
95	HTS20	20-10d	1,450	N/A
96	HD8A	SILL: 7/8" BOLT	7,910	N/A
		STUD:(3) 7/8"X5½" BOLTS		
97	MTSM16	BLOCK: 4-¼"X2¼" TC JOIST : 7-10d	860	N/A
98	HTT4	SILL: 7/8" BOLT	4,235	N/A
		STRAP: 18-16d		
99	A35	H:4-8dx1½"/P:4-8dx1½"	440	440 / N/A
102	HTT5	7/8" BOLT/ 26-10d	4,275	N/A
103	VGTR/L	32-SDS¼"X3"/(2) 7/8" BLT	3,990	N/A
104	HDU8-SDS2.5	7/8" BLT/20-SDS ¼"x2½"	5,020	N/A
110	HCP2	12-10d x 1½"	520	260 / N/A
167	HHUS46	H:14-16d/J:6-16d	1,550	N/A
168	U46	H:8-10d/J:4-10d	710	N/A
181	HUS26	20-16d	1,550	N/A
184	HUC28-2	H:14-16d/J:4-10d	1,085	N/A
214	HUC212-3	HD:(22)0.162"X3½" TAPCON BM: (10) 0.148x3"	1,895	N/A
215	HGUS210-2	HDR:46-16d/JST:10-16d	2,720	N/A
216	HUS412	BLOCK: 10-¼"X1½" TC JOIST : 10-16d	3,240	N/A
217	HUS212-2	BLOCK: 10-¼"X1½" TC JOIST : 10-16d	2,630	N/A
219	MBHA412	H:1-ATR3/4X8 TOP&FACE	3,145	N/A
		JOIST: 18-10d		
220	N/A	N/A	1,620	N/A
226	MBHA4.75/12	HDR : (2) 3/4" φ x 8" JOIST : 18-10d	2,160	N/A
231	MBHA3.56/16	HDR : (2) 3/4" φ x 8" JOIST : 18-10d	3,450	N/A
232	MBHA5.50/16	HDR : (2) 3/4" φ x 8" JOIST : 18-10d	3,450	N/A
240	H16	R:2-10dx1½"P:10-10dx1½"	1,470	480 / N/A
241	LGT2	30-16d-sinker	2000	1015 / 440
301	MGT	(1) 5/8"BLTS./GIR: 22-10d	3,965	N/A
302	HGT-2 or 3	LTL:3/4"BLTS./GIR: 8-10d	6485	N/A
303	HGT-4	LTL:3/4"BLTS./GIR: 16-10d	9,250	N/A
401	SUR/L414	FACE:18-16d/JST:8-16d	1,700	N/A
T	CONNECTORS TO BE SPECIFIED & PROVIDED BY TRUSS MANUFACTURERS			

NOTES

1. TYPICAL ROOF GABLE OVERHANG TO BE 12" UNLESS OTHERWISE NOTED.

2. TYPICAL ROOF EAVES OVERHANG TO BE 16" UNLESS OTHERWISE NOTED.

3. PROVIDE AND INSTALL FLASHING AND ROOFING AS PER NATIONAL ROOFING AND SHEET METAL ASSOC.STANDARDS AND/ OR ACCEPTABLE INDUSTRY PRACTICE AND IN ACCORDANCE WITH 6TH EDITION (2017)FLORIDA RESIDENTIAL CODE.

4. ALL ROOF TRUSSES, GIRDERS, BEAMS, HEADERS, ETC. TO BE SIZE BY TRUSS MANUFACTURER OR FL. REG. ENG.

5. TRUSSES SHALL BE BRACED TO PREVENT ROTATION & PROVIDE LATERAL STABILITY KIN ACCORDANCE WITH THE REQUIREMENTS SPECIFIED IN THE CONSTRUCTION DOCUMENTS FOR BUILDING & ON THE INDIVIDUAL TRUSS DESIGN DRAWINGS IN THE ABSENCE OF SPECIFIC BRACING REQUIREMENTS, TRUSSES SHALL BE BRACED IN ACCORDANCE WITH TPI/WTCA BCSI 1.

6. REFER TO TRUSS MANUFACTURERS DRAWINGS FOR TRUSS PLACEMENT & TRUSS TO TRUSS CONNECTIONS.

7. ROOF UNDERLAYMENT TO BE USED IS 30 LBS. SYNTHETIC FELT.

8. SHINGLE ROOF : UNDERLAYMENT TO BE INSTALLED IAW FBCR 2020, 7TH EDITION R905.1.1. UNDERLAYMENT MATERIALS REQUIRED TO COMPLY WITH ASTM D226, D1970, D4869 AND D6757 SHALL BEAR A LABEL INDICATING COMPLIANCE TO THE STANDARD DESIGNATION AND, IF APPLICABLE, TYPE CLASSIFICATION INDICATED IN TABLE R905.1.1 UNDERLAYMENT SHALL BE APPLIED AND ATTACHED IN ACCORDANCE WITH TABLE R905.1.1.

9. OFF RIDGE VENTS MAXIMUM OPENING SIZES:
- LOMANCO: (2) 9½" DIA.CIRCLES
-MILLENNIUM METAL: 2½"x46" HOLE

COMPONENT & CLADDING DESIGN WIND PRESSURES

SEE PLAN DESIGN WIND PRESSURE

+ XXX	ULTIMATE DESIGNED POSITIVE PRESSURE
- XXX	ULTIMATE DESIGNED NEGATIVE PRESSURE

NOTE: DESIGN PRESSURES BASED ULTIMATE WIND SPEED TO OBTAIN NOMINAL "ASD" WIND PRESSURES MULTIPLY VALUES SHOWN BY A FACTOR OF 0.6

FIELD REPAIR NOTES

1- MISSED FOOTING DOWELS MAY BE SUBSTITUTED W/ A STRAIGHT #5 REBAR SET IN A 3/4" DIA. x 6" DEEP HOLE FILLED W/ UNITEX PROPOXY 300 OR SIMPSON SET OR ETF ADHESIVES.

2- BLOCK WALL OVERHANGING SLAB CONDITION: UP TO 7/8" - NO REPAIR NECESSARY 7/8" TO 1½" - ADD FILLED CELL (NO VERTICAL STEEL) MIDPOINT OF WALL BETWEEN EXISTING FILLED CELLS (WITH STEEL) IN AREAS AFFECTED. 1½"+ - REQUIRE SPECIAL ENGINEERING LETTER.

3- PENETRATION OF PLUMBING PIPES/DRYER VENTS THRU PLATES OF A LOAD BEARING WALL MAY OCCUR PROVIDED DBL. STUDS ARE ADDED ON EITHER SIDE OF PENETRATION WITHIN 3" AND TRUSS/FLOOR TRUSS IS NO CLOSER THAN 3" FROM PENETRATION. ADD (1) MTS12 @ TOP AND BOTTOM PLATE

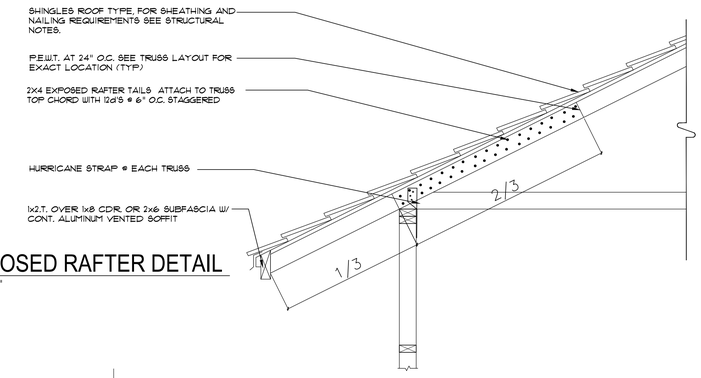

A1/S4 EXPOSED RAFTER DETAIL
1/2"= 1'-0"

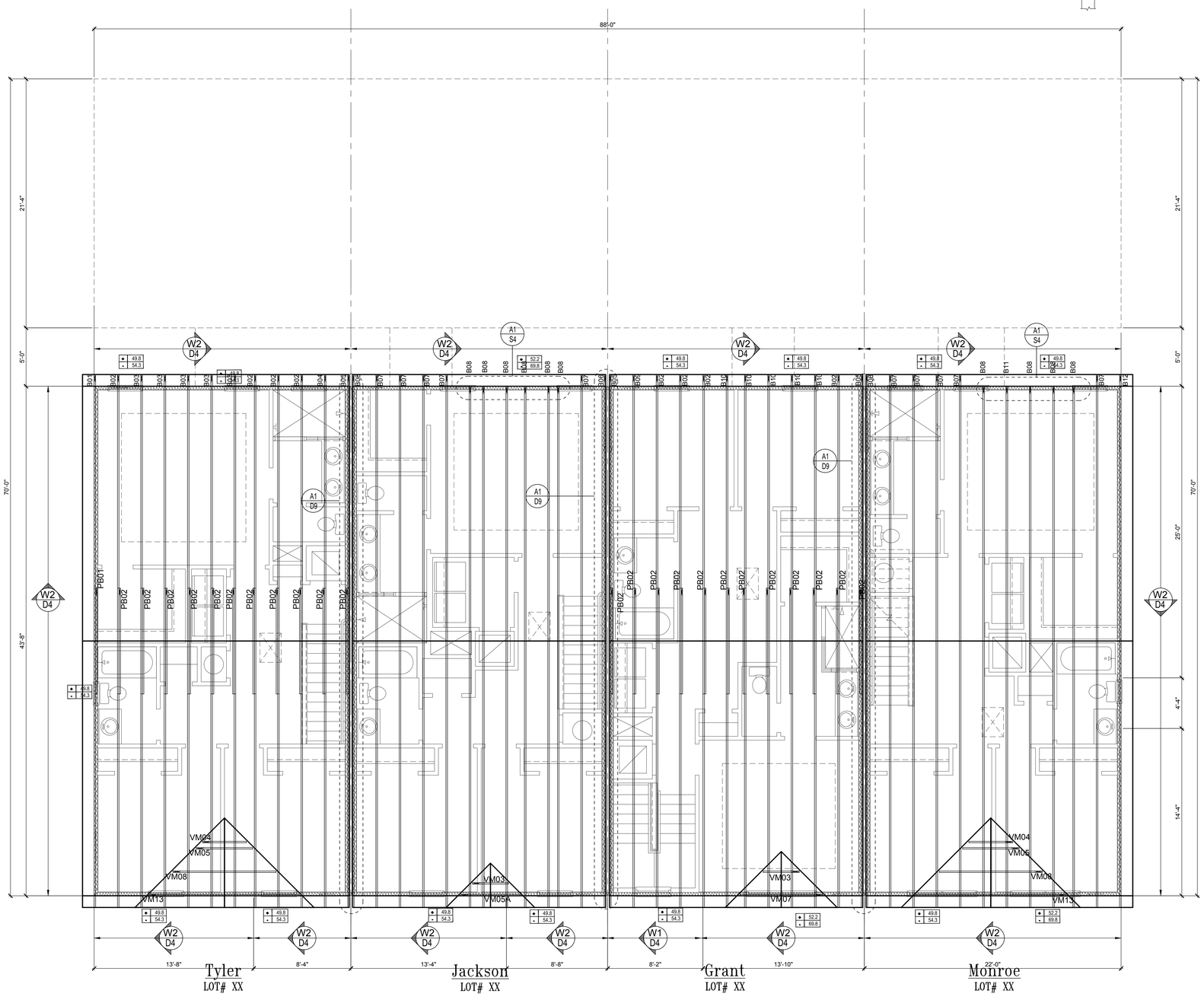

Roof Trusses "B"
SCALE: 1/4" = 1'-0"

THOMPSON ENGINEERING GROUP, INC.
4401 Vineland Road Suite #J Orlando, FL 32811
Ph: (407) 734-1459
Fax: (407) 734-1790
www.teg1.com

815 Orienta Ave., Suite #1040
Altamonte Springs, Fl. 32701
Ph: (407) 629-6711
Fax: (407) 629-6776
www.mjsdesignersgroup.com

designers group
residential-commercial-architecture

AIBD

GOBA
GREATER ORLANDO BUILDERS ASSOCIATION

4-Unit: Rear Load Detached

Models: Tyler, Jackson, Grant & Monroe
Building Pad #XX
Lot# XX-XX, Subdivision
Street Address
City, State, Zip Code

A division of Park Square Enterprises Inc.
5200 Vineland Rd. Suite #200
Orlando, Fl. 32811
Phone: (407) 529-3000

Park Square HOMES

ISSUE DATE	02/15/2023
REVISIONS	
PROJECT:	22-1148
SCALE:	AS NOTED
DRAWN BY:	M.C.
DESIGNED BY:	MJS

FLOOR PLAN
6 UNIT
S4

Design1C:\Users\Design1\OneDrive - Thompson Engineering Group\Desktop\4-Unit\dwg Files\S4 Roof Plan (Elev. B).dwg
Jul 26, 2023, 1:00pm

STRUCTURAL NOTES

1. THIS STRUCTURE HAS BEEN DESIGNED IN ACCORDANCE WITH THE 7TH EDITION, FBCR 2020 (WIND LOAD @ 140 MPH.)
   LIVE LOAD ROOF: 20 PSF.
   FLOOR: 40 PSF, BALCONIES & STAIRS: 40 PSF
   OCCUPANCY= 1.0
   BUILDING CATEGORY R3, WIND EXPOSURE B
   INTERNAL PRESSURE COEFFICIENTS = +0.18 AND -0.18
2. WINDOWS, DOORS, AND GARAGE DOORS TO BE DESIGNED TO MEET FBCR SECTION R301
3. ALL FLOOR SLABS TO BE OF 2,500 PSI CONC. PLANT MIX MIN. 5" THICK WITH 6x6 10/10 WIRE MESH 6 MIL. POLY. VAPOR-BARRIER OVER TERMITE TREATED COMPACTED CLEAN FILL.
4. CONCRETE MASONRY UNITS SHALL MEET: CH. 1-3 OF ACI 530-02/ ASCE 5-02/TMS 402-02 OR BIA BUILDING CODE REQUIREMENTS.
5. MORTAR TO BE TYPE "M" OR "S", GROUT - 2,500 PSI @ 28 DAYS.
6. MASONRY CLEAN OUTS REQUIRED @ GROUT GREATER THAN FIVE (5) FEET IN HEIGHT AND ALL VERTICALS.
7. REBAR TO BE # 5'S GRADE 60, W/ MIN. LAP OF 25". USE "L" BARS @ CORNERS AND USE STANDARD HOOKS @ CHANGE IN DIRECTION WITH MIN. LAP 12"
8. GYP. BD. CEILING SHALL BE INSTALLED PERP. TO FRAMING & NAILED @ 7" O.C. WITH 5d NAILS. GYP. BD. WALLS SHALL BE NAILED @8" O.C. WITH 5d NAILS
9. UPLIFT CONNECTOR'S TO PROVIDE CONTINUITY FROM ROOF TRUSSES THRU PLATES TO SLAB AND FOUNDATION PER ENCLOSED DETAILS.
10. EPOXY ANCHOR ALTERNATIVE:
    THREADED ANCHOR ROD MAY BE USED IN LIEU OF ANCHOR BOLTS FOR USE AS PLATE ANCHORS OR HURRICANE ANCHORS.
    THE FOLLOWING CRITERIA MUST BE MET:

ANCHOR SIZE	CONC. HOLE SIZE	MIN. HOLE DEPTH
½"	-3/4"	7"
-5/8"	-7/8"	7"
-3/4"	1"	8"
-7/8"	1-1/8"	9"

    AFTER HOLE IS DRILLED, ALL CONCRETE DUST MUST BE REMOVED PRIOR TO EPOXY INSTALLATION. THREADED ROD TO BE MIN. A36 STEEL AND FREE OF DIRT OR GREASE. LOAD ON ROD CANNOT BE APPLIED UNTIL 12 HOURS AFTER INSTALLATION. 2 COMPONENT EPOXY RESIN MATERIAL TO BE MIXED PER MFG. DIRECTIONS.
11. SOIL BEARING CAPACITY 2000 PSF MINIMUM

WOOD STRUCTURAL NOTES

1. ALL WOOD TO BE SPECIES, GROUP, AND GRADE AS NOTED BELOW. DAMAGED WOOD NOT TO BE USED.
2. ALL STRUCTURAL LUMBER SHALL BE SPF (SPRUCE-PINE-FIR) #2 OR BETTER UNLESS OTHERWISE NOTED. (PRE ENG. TRUSSES EXCLUDED)
3. END JOINT IN STRUCTURAL DOUBLE TOP PLATE TO BE OFFSET AT LEAST 4". STRUCTURAL DOUBLE PLATES TO BE NAILED @ 6" O.K..
4. PLYWOOD OR OSB. WALL SHEATHING NAIL PATTERN TO BE 10d @ 6" O.C.. UNLESS OTHERWISE NOTED.
5. NUMBER OF HEADER STUDS AND ADJACENT FULL LENGTH STUDS PER WALL AND HEADER STUD REQUIREMENT SCHEDULE.
6. MAX. 1" HOLE DRILLED INTO EXTERIOR STRUCTURAL STUDS.
7. DBL. STUDS @ EA. END OF SHEAR WALL.
8. WHEN ANCHORING MULTIPLE WD. ITEMS TOGETHER, THE LENGTH OF HURRICANE STRAP MUST BE CENTERED.
9. NAIL PATTERN
   -DOUBLE PLATE 12" O.C.. OUTSIDE SPLICE ZONE (SEE NOTE 4)
   -DOUBLE STUDS @ 12" O.C..
   -DOUBLE OR TRIPLE HEADER @ 6" O.C.. @ EDGE @ 12" O.C.. INTERMEDIATE.
   -HEADER TO STUD @ 4" O.C.. EA. HEADER MEMBER.
   -STUD TO TOP OR BOTTOM PLATE : (2) 16d THRU PLT. OR (2) 16d EA. SIDE TOE NAILED TO PLT.
10. -ROOF SHEATHING FOR SHINGLE ROOF TO BE MIN. 7/16 OSB, NAILED TO ROOF TRUSSES SPACED @ 24" O.C. (MAX) WITHOUT BLOCKING.
    -ROOF SHEATHING FOR TILE ROOF TO BE MIN. 19/32" OSB, 1/2" CDX PLYWOOD OR 1/2" ADVANTECH. NAILED TO ROOF TO ROOF TRUSS SPACED @ 24" O.C. (MAX) WITHOUT BLOCKING.
11. FLOOR SHEATHING TO BE MIN. 23/32" PLYWOOD NAILED @ 6" O.C. W/ #8 RING SHANK NAILS AND LIQUID NAIL ADHESIVE.
12. ALL FLOOR TRUSSES TO BE END BLOCKED @ BEARING LOCATIONS
13. TRUSS BRACING PER TRUSS MANUFACTURE'S DRAWINGS.
14. ALL NAILING SPECIFIED TO BE APPLIED BY NAIL GUN OR MANUALLY
15. ALL WOOD IN DIRECT CONTACT WITH MASONRY SHALL BE PRESSURE TREATED.
16. 2000 PSF MINIMUM SOIL BEARING CAPACITY

FIELD REPAIR NOTES

1. MISSED LINTEL STRAPS FOR MASONRY CONSTRUCTION MAY BE SUBSTITUTED W/ (1) USP MTW16 OR HC10 OR SIMPSON MTSM16 W/ (4) -1/4" X 2-1/4" TAPCONS TO BOND BEAM AND (7) 10d NAILS TO TRUSS FOR UPLIFTS LESS THAN 860 LBS (USE (2) MTSM16 FOR UPLIFTS LESS THAN 1720#). NO MORE THAN 10 STRAPS MAY BE SUBSTITUTED OR NO MORE THAN 3 IN A ROW. IF GIRGER TRUSS CONNECTIONS ARE MISSED CONTACT ENGINEER FOR SUBTITUTION
2. MISSED J-BOLTS FOR FRAMED EXTERIOR/ BEARING WALLS MAY BE SUBSTITUTED W/ 1/2" DIA. x 7" LONG WEDGE ANCHORS (REDHEADS).
3. MISSED FOOTING DOWELS MAY BE SUBSTITUTED W/ A STRAIGHT #5 REBAR SET IN A 3/4" DIA. x 6" DEEP HOLE FILLED W/ UNITEX PROPOXY 300 OR SIMPSON SET OR ETF ADHESIVES.
4. BLOCK WALL OVERHANGING SLAB CONDITION:
   UP TO -7/8" - NO REPAIR NECESSARY
   -7/8" TO 1-1/4" - ADD FILLED CELL (NO VERTICAL STEEL) MIDPOINT OF WALL BETWEEN EXISTING FILLED CELLS (WITH STEEL) IN AREAS AFFECTED
   1-1/4"+ - REQUIRE SPECIAL ENGINEERING LETTER
5. PENETRATION OF PLUMBING PIPES/DRYER VENTS THRU PLATES OF A LOAD BEARING WALL MAY OCCUR PROVIDED DBL. STUDS ARE ADDED ON EITHER SIDE OF PENETRATION WITHIN 3" AND TRUSS/ FLOOR TRUSS IS NO CLOSER THAN 3" FROM PENETRATION. ADD (1) MTS12 @ TOP AND BOTTOM PLATE

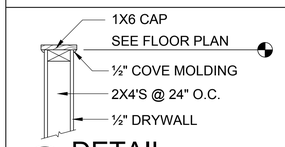

3 D1 DETAIL 1/2"= 1'-0"

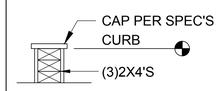

4 D1 DETAIL 1/2"= 1'-0"

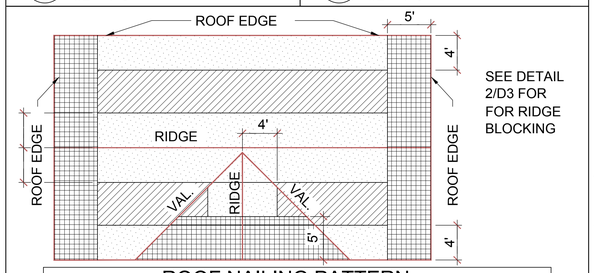

ROOF NAILING PATTERN

ZONE:	8d NAILS @ 6" O.C. EDGES AND 6" O.C. FIELD
ZONE:	8d NAILS @ 6" O.C. EDGES AND 6" O.C. FIELD
ZONE:	8d NAILS @ 4" O.C. EDGES AND 4" O.C. FIELD

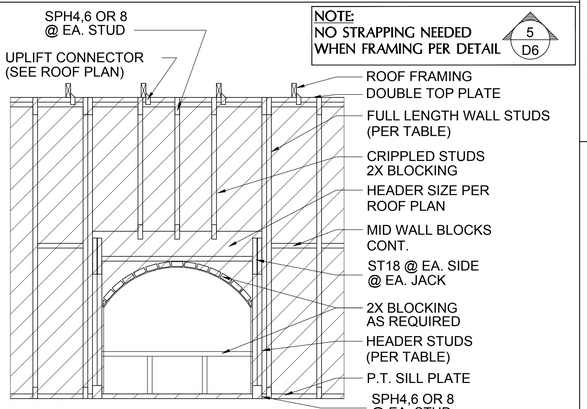

NOTE:
NO STRAPPING NEEDED WHEN FRAMING PER DETAIL 5 D6

TYP. FRAMING FOR OPNGS.

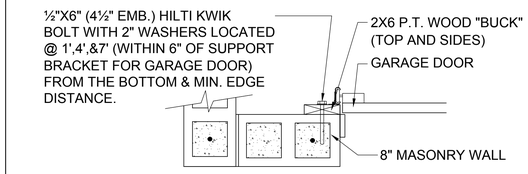

- DETAIL TO SATISFY 150 MPH WIND LOAD
- MASONRY FRAME SHALL BE MIN 8X16 ASTM C-9D
- GROUT FILLED CELL W/½" ASTM 2 #5 REBAR (GRADE 60) @ EA. SIDE OF GARAGE DOOR OPENING
- MAX. DISTANCE TO CORNER OF C.B.S. WALL REINF. 48"
- REINF. TO BE CONT. FROM FTG. TO TIE BEAM W/ ALL "ACI" DETAILS & DEVELOPMENT LENGTHS ADHERED TO
- GARAGE DOOR MANUF. TO PROVIDE ATTACHMENT TO "BUCK"

1.) THE GARAGE DOOR ASSEMBLY SHALL BE DESIGNED FOR POSITIVE AND NEGATIVE WIND PRESSURES OF 25 PSF IN ACCORDANCE WITH SECTION R301 OF THE FLORIDA RESIDENTIAL CODE CERTIFICATION SHALL BE SUBMITTED FROM THE GARAGE DOOR MANUFACTURER TO THE BUILDING DEPARTMENT FOR THE FOLLOWING ITEMS:
   A.) THE DESIGN OF THE DOOR CAN WITHSTAND POSITIVE AND NEGATIVE WIND PRESSURES OF 25 PSF.
   B.) THE DESIGN OF THE DOOR COMPLIES WITH THE CRITERIA SPECIFIED IN SECTION R609 OF THE 2020 FLORIDA BUILDING CODE RESIDENTIAL, 7TH EDITION
   C.) DOOR SIZE, TYPE AND GLAZING
   D.) TRACK SIZE AND FASTENER DETAILS.
   E.) TRACK BRACKET QUANTITY, SPACING AND FASTENER DETAILS.
   F.) REINFORCING MEMBER QUANTITY, LOCATION, SIZE, TYPE AND FASTENER DETAILS. (IF REQUIRED)

GARAGE BUCK DETAIL

1"= 1'-0"

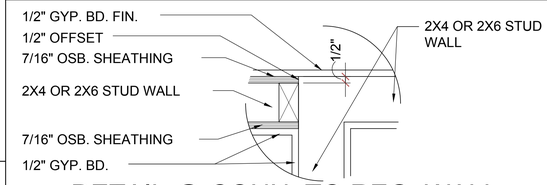

7A D1 DETAIL @ CONN. TO REG. WALL 1"= 1'-0"

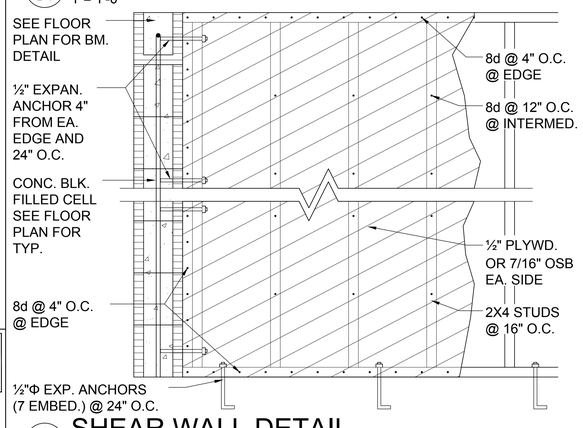

7 D1 SHEAR WALL DETAIL 1/2"= 1'-0"

USE ONLY WHEN NOTED AS SHEAR WALL ON PLANS

MIN. WALL AND HEADER REQUIREMENTS

		MAXIMUM HEADER SPAN (ft.)					
		3'	6'	9'	12'	15'	18'
UNSUPPORTED WALL HEIGHT	STUD SPACING	NUMBER OF HEADER STUDS SUPPORTING END OF HEADER					
		1	1	2	2	2	2
		NUMBER OF FULL-LENGTH STUDS @ EACH END OF HEADER					
10' OR LESS		2	2	3	3	3	3
GREATER THAN 10'		2	2	3	4	5	5

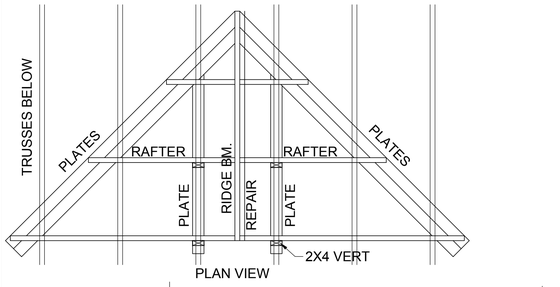

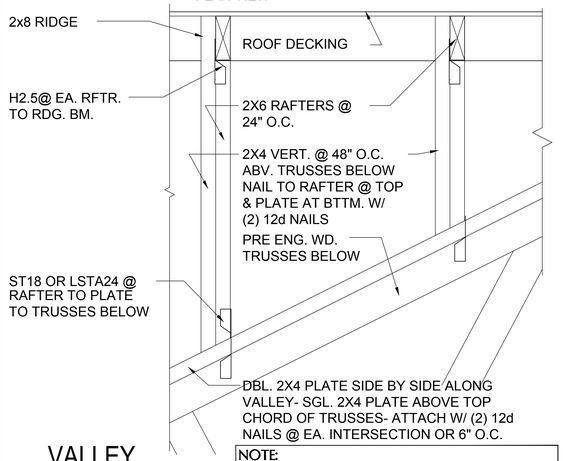

8 D1 VALLEY DETAIL -3/4" = 1'-0"

NOTE:
IF RIDGE BEAM IS UNDERSIZED-CUT 1 1/2" FROM END OF RAFTERS ON ONE SIDE AND ADD 2X8 NEXT TO FIRST ONE W/12d'S @ 6" O.C.

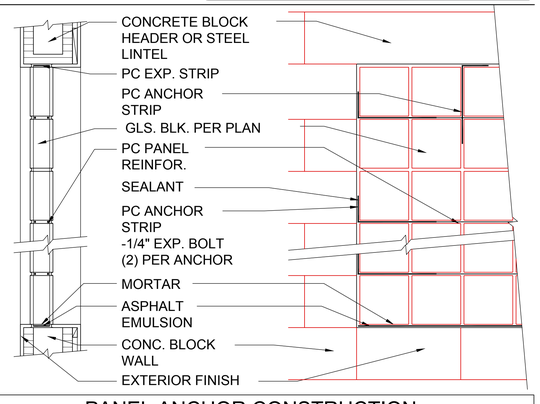

PANEL ANCHOR CONSTRUCTION

PC PANEL REINFORCING (TOP):
USED IN PANELS OVER 25"S.F. IN AREA,IS EMBEDDED HORIZONTALLY IN THE MORTAR JOINTS BETWEEN EVERY OTHER COURSE. PANEL REINFORCING IS FORMED OF TWO PARALLEL WIRES, EITHER 1-5/8" O.C. (FOR USE WITH "THINLINE" SERIES GLS. BLK.) OR 2" O.C. (FOR USE W/ "PREMIERE" SERIES GLS. BLK.), W/ BUTT WELDED CROSSWIRES AT REGULAR INTERVALS. 4' AND 10' LENGTHS AVAILABLE.

PC PANEL ANCHORS (MIDDLE):
ARE USED TO TIE PITTSBURGH CORNING GLASS BLOCK PANELS INTO THE SURROUNDING FRAMEWORK WHEN CHANNELS ARE NOT USED. FORMED FROM 20 GAUGE PERFORATED- THEN GALVANIZED STEEL STRIPS, PANEL ANCHORS ARE AVAIL. IN 1-3/4" WIDTHS X 24" LENGTHS.

PC EXPANSION STRIPS (BOTTOM):
MADE OF WHITE POLYETHYLENE, ARE INSERTED AT THE HEAD AND THE STRIPS REPLACE MORTAR AT THESE POINTS TO CUSHION THE GLASS BLOCK AND ALLOW THE PANEL TO EXPAND & CONTRACT FREELY. FOR METAL CHANNEL OR MASONRY CHASE CONSTRUCTION, PC EXPANSION STRIPS ARE AVAILABLE 3/8" THICK X 4" WIDE X 24" LONG. FOR PANEL ANCHOR CONSTRUCTION, STD. 4" WIDE STRIPS ARE EASILY CUT TO 3" WIDTH, FOR 3-7/8" "PREMIERE" SERIES BLK., AND TO 2-1/4" WIDTH, FOR 3-1/8" "THINLINE" SERIES BLOCK.

6 D1 GLASS BLOCK DETAIL

THOMPSON ENGINEERING GROUP, INC.
4401 Vineland Road Suite A6 Orlando, FL 32811
Phone: (407) 734-1790
Fax: (407) 734-1790
www.tegfl.com

MJS designers group
residential-commercial-architecture
815 Orienta Ave., Suite #1040
Altamonte Springs, Fl. 32701
Ph: (407) 629-6711
Fax: (407) 629-6776
www.mjsdesignersgroup.com

AIBD

GOBA GREATER ORLANDO BUILDERS ASSOCIATION

4-Unit: Rear Load Detached
Models: Tyler, Jackson, Grant & Monroe
Building Pad #XX
Lot# XX-XX, Subdivision
Street Address
City, State, Zip Code

A division of Park Square Enterprises Inc.
5200 Vineland Rd. Suite #200
Orlando, Fl. 32811
Phone: (407) 529-3000

Park Square HOMES

ISSUE DATE	02/15/2023
REVISIONS	
PROJECT:	22-1148
SCALE:	AS NOTED
DRAWN BY:	M.C.
DESIGNED BY:	MJS

STRUCTURAL NOTES & DETAILS
D1

Design f:\Users\Design1\OneDrive - Thompson Engineering Group\Desktop\4-Unit\dwg Files\SD1 Structural Details.dwg
Jul 26, 2023, 1:00pm

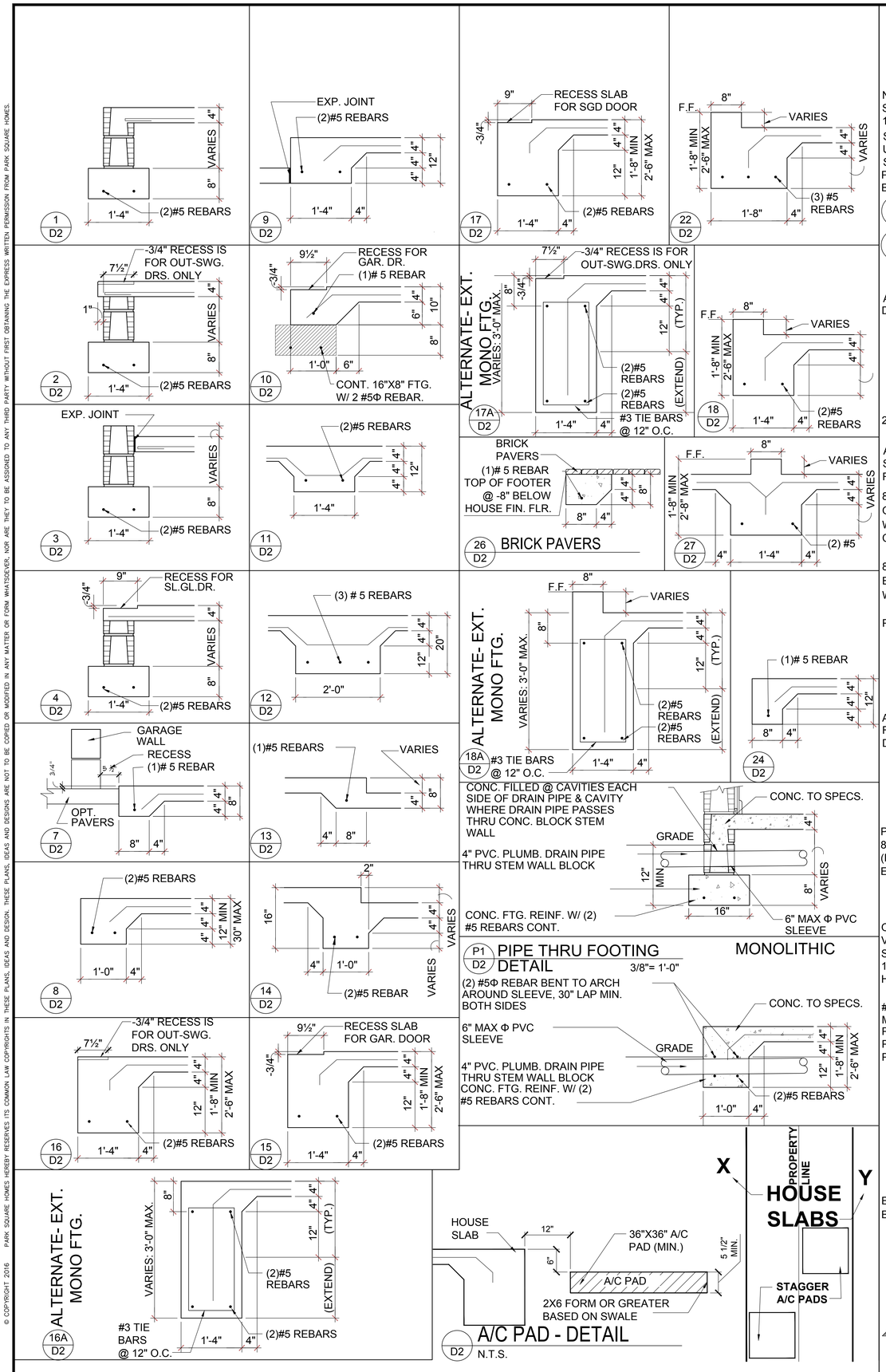

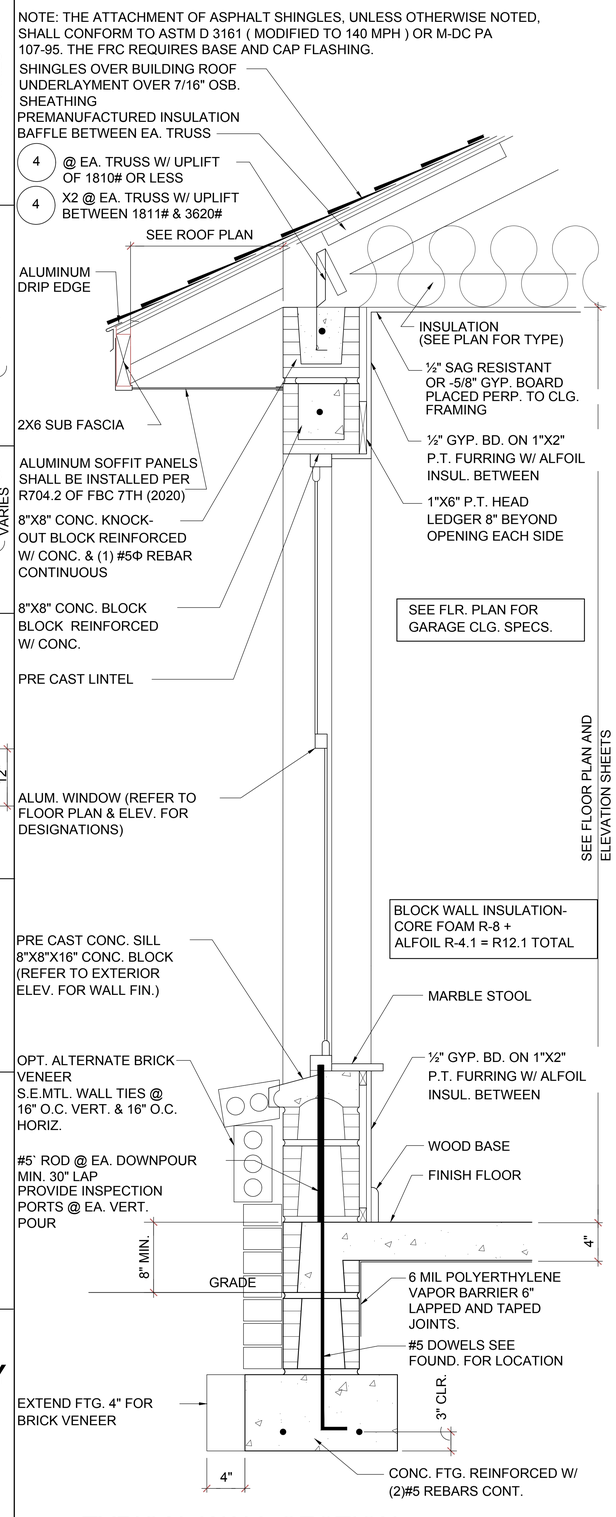

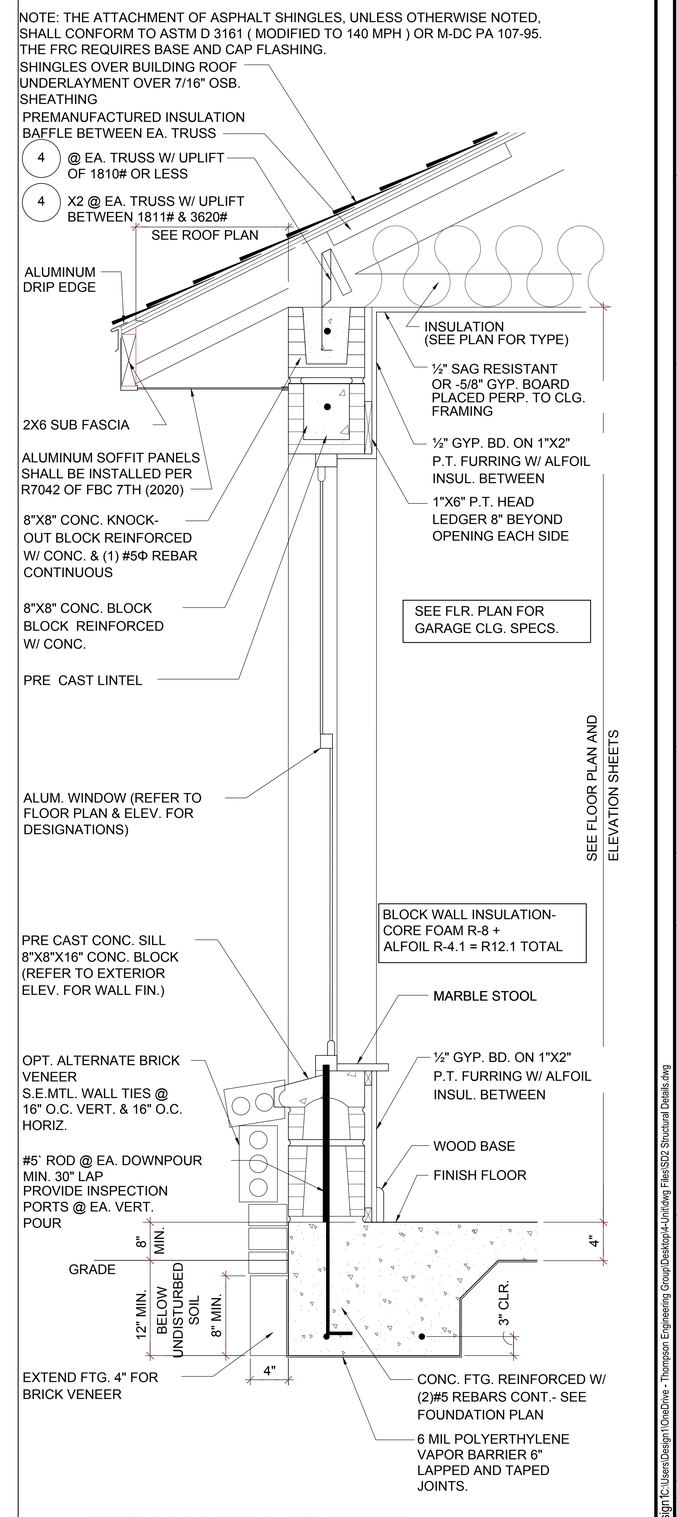

THOMPSON ENGINEERING GROUP, INC.
4401 Vineland Road Suite A6 Orlando, FL 32811
Ph: (407) 734-1790
Fax: (407) 734-1790
www.tegfl.com

MJS designers group
residential-commercial-architecture
815 Orienta Ave., Suite #1040
Altamonte Springs, Fl. 32701
Ph: (407) 629-6711
Fax: (407) 629-6776
www.mjsdesignersgroup.com

A I B D®

GOBA GREATER ORLANDO BUILDERS ASSOCIATION

4-Unit: Rear Load Detached

Models: Tyler, Jackson, Grant & Monroe

Building Pad #XX
Lot# XX-XX, Subdivision
Street Address
City, State, Zip Code

A division of Park Square Enterprises Inc.
5200 Vineland Rd. Suite #200
Orlando, Fl. 32811
Phone: (407) 529-3000

Park Square HOMES

ISSUE DATE	02/15/2023
REVISIONS	
PROJECT:	22-1148
SCALE:	AS NOTED
DRAWN BY:	M.C.
DESIGNED BY:	MJS

STRUCTURAL DETAILS
D2

Design T:\Users\Design1\OneDrive - Thompson Engineering Group\Desktop\4-Unit\dwg Files\SD2 Structural Details.dwg
Jul 26, 2023, 1:00pm

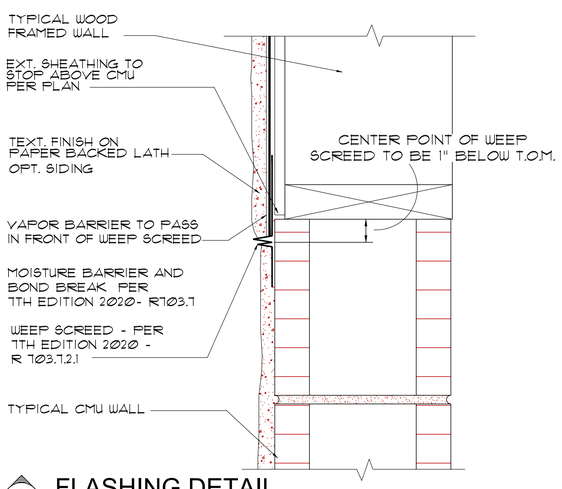

A D3 FLASHING DETAIL

TOLERANCES: ALL DIMENSION TO BE HELD WITHIN +- 1/4"

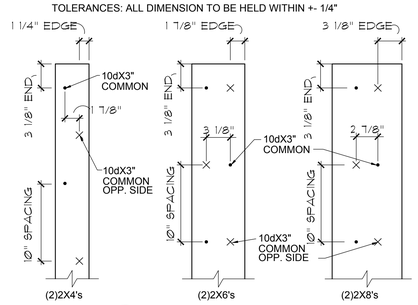

B 2X BUILT-UP STUD COLUMN DETAILS

1?" = 1'-0"

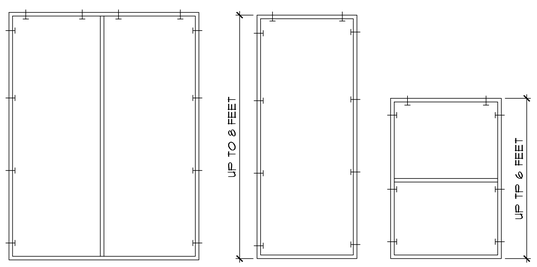

DOUBLE DOOR SINGLE DOOR WINDOW

FOR MULTIPLE WINDOWS AND DOORS USE 2 TAPCONS PER WINDOW AT THE HEAD AND 4 TAPCONS AT THE JAMB.

BUCK ATTACHMENT DATA

BUCKS SHALL BE 1x4 OR 2x8 PT AT WINDOWS OR 2x8 PT AT DOORS IN PINE OR SPRUCE. AT WINDOWS ATTACH BUCKS TO BLOCK WITH COMMON T-NAILS AND PLACEMENT SIMILAR TO TAPCONS SHOWN. AT DOORS OR FIN WINDOWS IN BLOCK, ATTACH BUCKS w/ 2 T-NAILS TOP AND BOTTOM AND 8" O.C. STAGGERED IN THE FIELD.

USE MIN. 2-1/4" T-NAILS w/ 1x BUCK. USE MIN. -1/4" x 3" TAPCONS w/ 2x BUCK. START ALL END TAPCONS WITHIN 6" OF CORNERS AND 30" ON CENTER MAXIMUM.

NOTE

IN CASE OF BLOCK OPENINGS LARGER THAN DOOR FRAMING: ATTACH ADDITIONAL 2X FRAMING TO THE BLOCK WALL USING 1/4" x 4" TAPCONS AT 3" FROM END AND 12" O.C. IN THE CENTER. ATTACH TOP FRAMING TO HEADER USING 1/4"x1-3/4" TAPCONS W/ (1) 6" FROM END TO END AND 12" O.C. IN THE. CENTER.

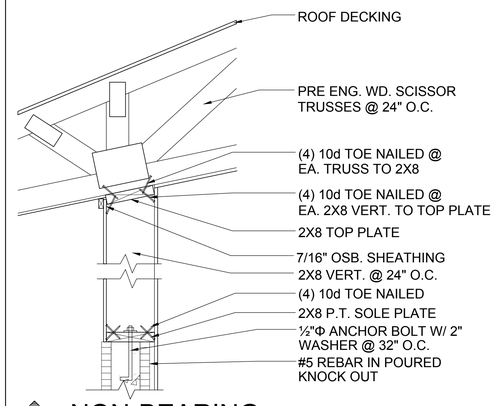

G-6 D3 NON-BEARING

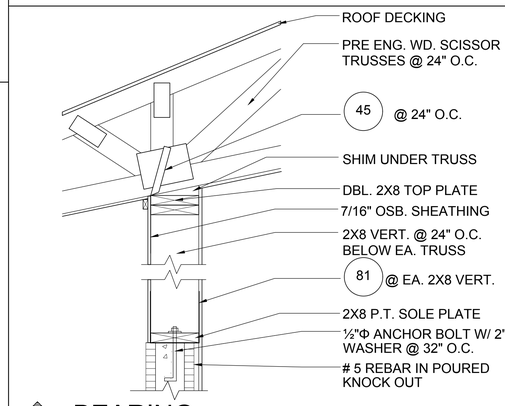

G-7 D3 BEARING

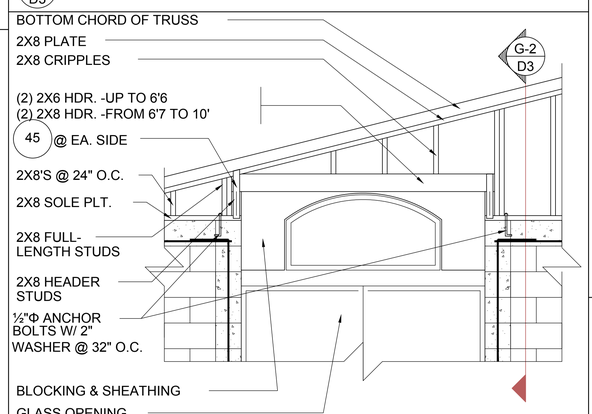

B D3 GABLE END

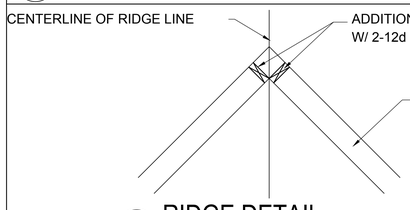

2 D3 RIDGE DETAIL
N.T.S.

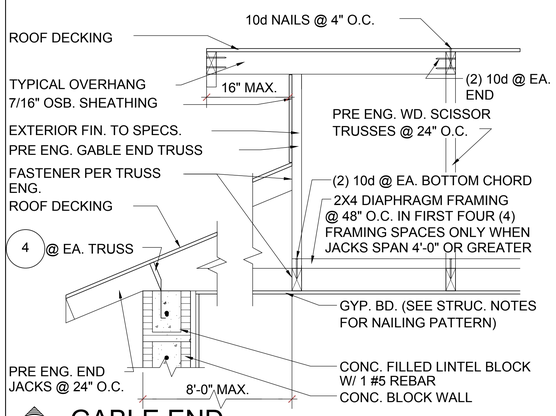

G-3 D3 GABLE END

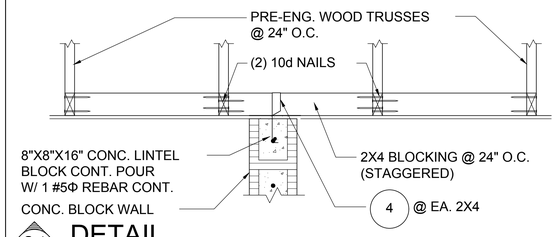

G-4 D3 DETAIL

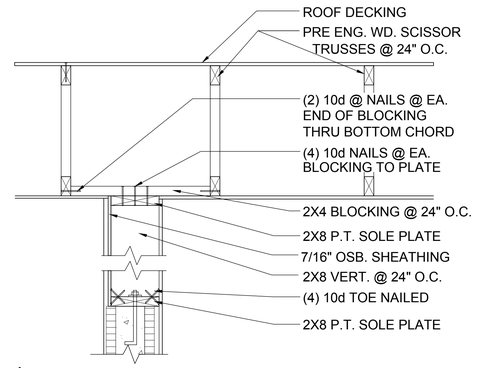

G-5 D3 GABLE END

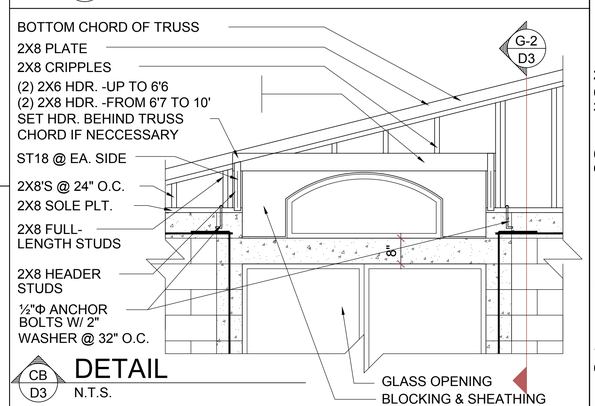

CB D3 DETAIL
N.T.S.

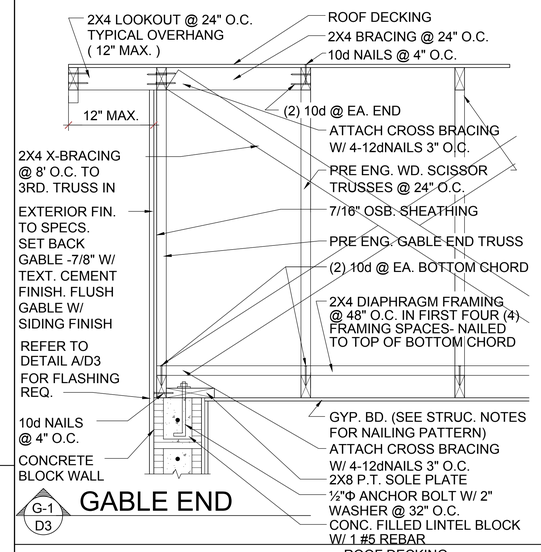

G-1 D3 GABLE END

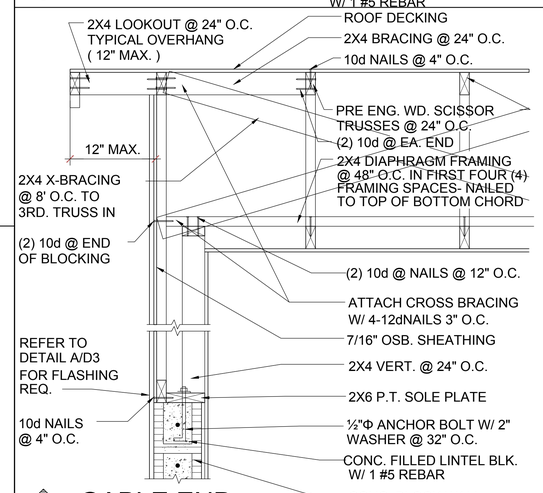

G-2F D3 GABLE END

FLAT BOTTOM GABLE END

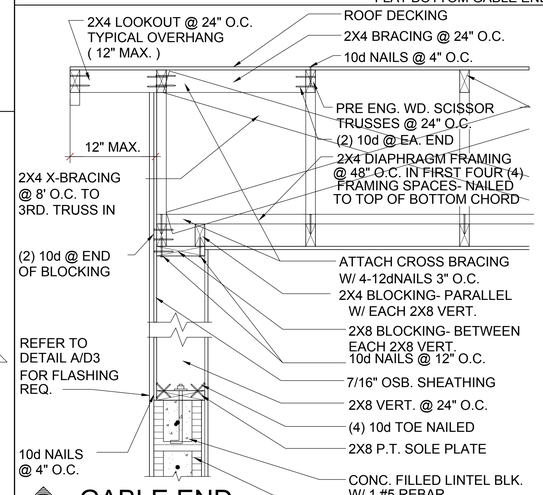

G-2 D3 GABLE END

THOMPSON ENGINEERING GROUP, INC.
4401 Vineland Road Suite A6 Orlando, FL 32811
Ph: (407) 734-1790
Fax: (407) 734-1790
www.tegfl.com

815 Orienta Ave., Suite #1040
Altamonte Springs, Fl. 32701
Ph: (407) 629-6711
Fax: (407) 629-6776
www.mjsdesignersgroup.com
designers group
residential-commercial-architecture

GOBA GREATER ORLANDO BUILDERS ASSOCIATION

4-Unit: Rear Load Detached

Models: Tyler, Jackson, Grant & Monroe
Building Pad #XX
Lot# XX-XX, Subdivision
Street Address
City, State, Zip Code

A division of Park Square Enterprises Inc.
5200 Vineland Rd. Suite #200
Orlando, Fl. 32811
Phone: (407) 329-3000

Park Square HOMES

ISSUE DATE	02/15/2023
REVISIONS	
PROJECT:	22-1148
SCALE:	AS NOTED
DRAWN BY:	M.C.
DESIGNED BY:	MJS.

STRUCTURAL DETAILS
D3

Design: C:\Users\Design1\OneDrive - Thompson Engineering Group\Desktop\4-Unit\dwg Files\SD3 Structural Details.dwg
Jul 26, 2023, 1:00pm

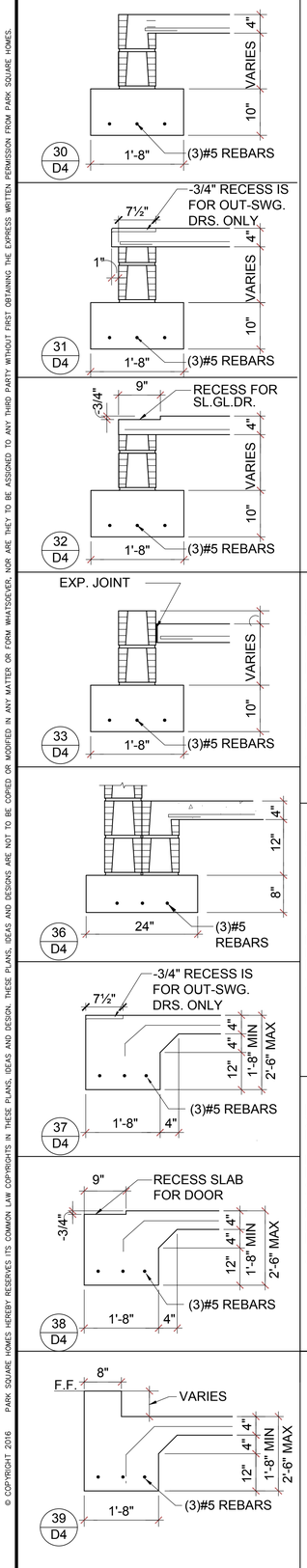

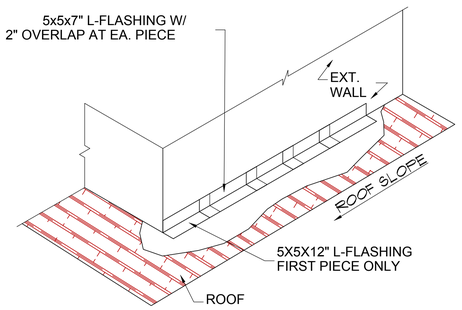

STEP FLASHING DETAIL

N.T.S.

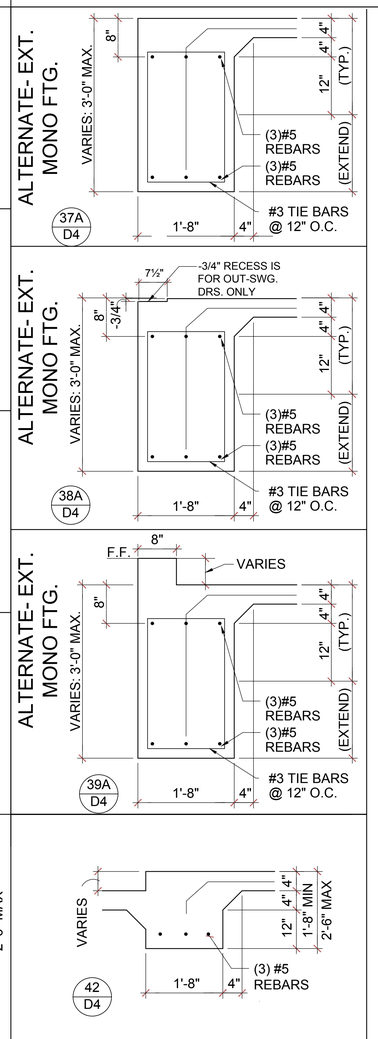

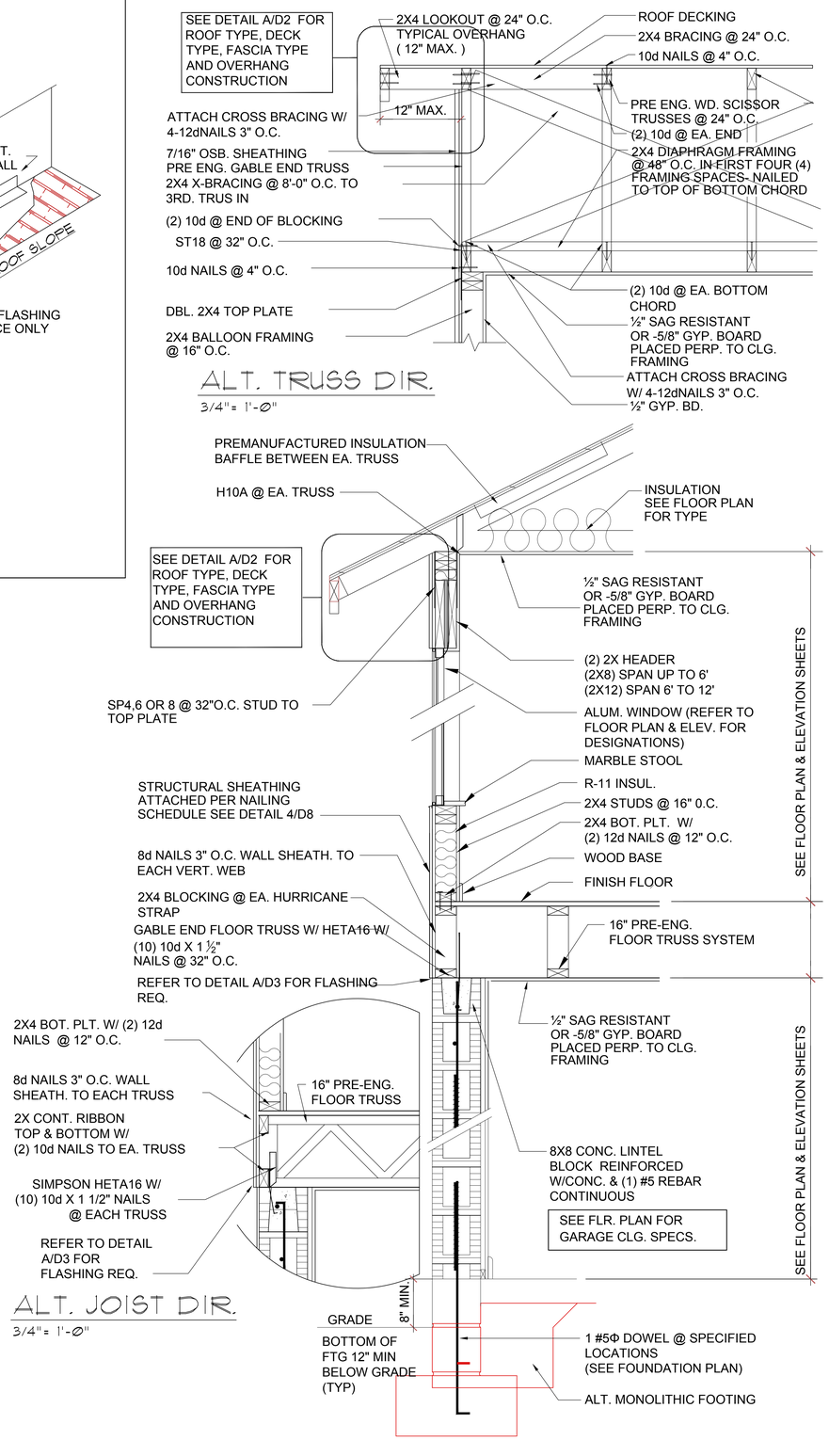

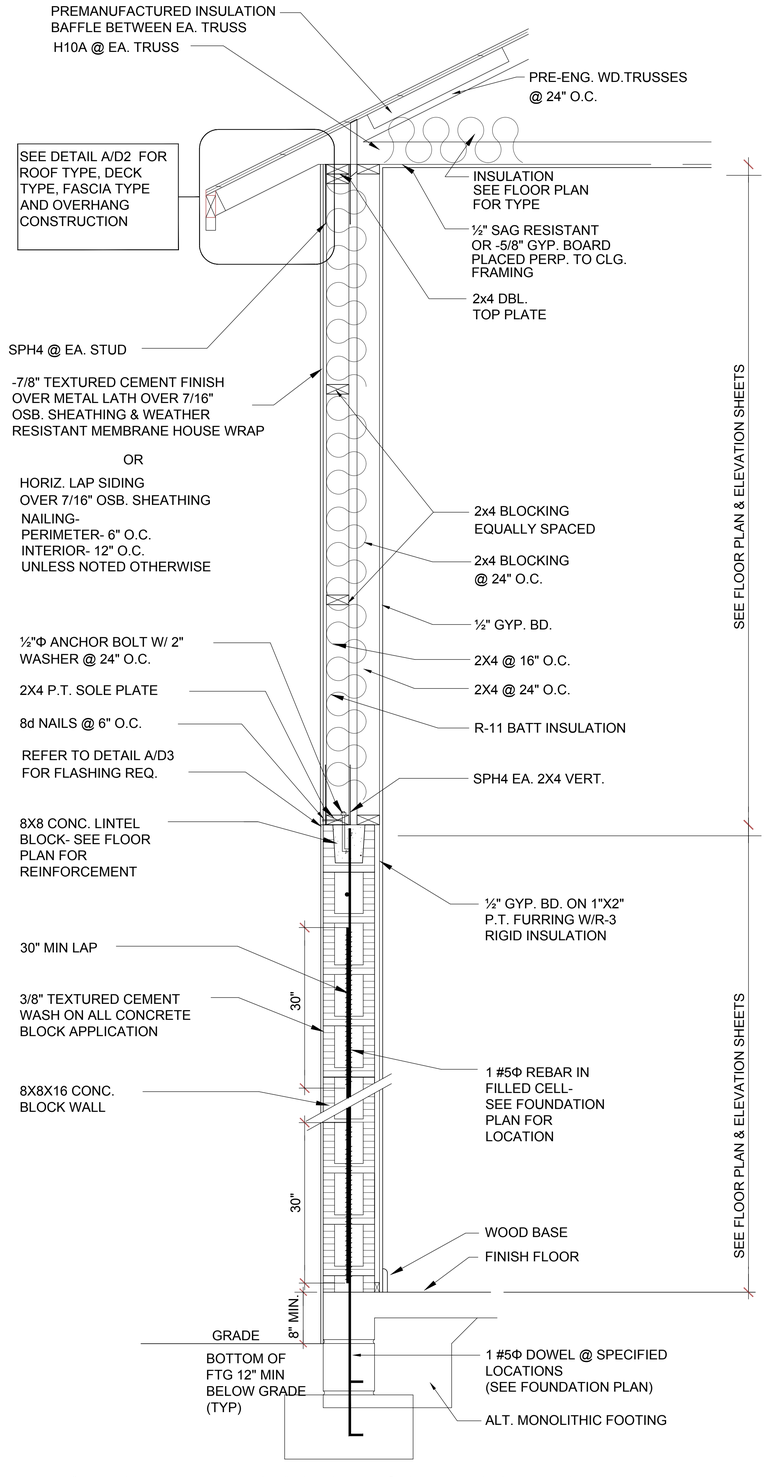

TEG
THOMPSON ENGINEERING GROUP, INC.
4401 Vineland Road Suite A6 Orlando, FL 32811
Ph: (407) 734-1790
Fax: (407) 734-1790
www.tegfl.com

MJS designers group
residential-commercial-architecture
815 Orienta Ave., Suite #1040
Altamonte Springs, Fl. 32701
Ph: (407) 629-6711
Fax: (407) 629-6776
www.mjsdesignersgroup.com

AIBD

GOBA
GREATER ORLANDO BUILDERS ASSOCIATION

4-Unit: Rear Load Detached

Models: Tyler, Jackson, Grant & Monroe

Building Pad #XX
Lot# XX-XX, Subdivision
Street Address
City, State, Zip Code

A division of Park Square Enterprises Inc.
5200 Vineland Rd. Suite #200
Orlando, Fl. 32811
Phone: (407) 329-3000

Park Square HOMES

ISSUE DATE	02/15/2023
REVISIONS	
PROJECT:	22-1148
SCALE:	AS NOTED
DRAWN BY:	M.C.
DESIGNED BY:	MJS.

STRUCTURAL DETAILS
D4

Design f:\Users\Design1\OneDrive - Thompson Engineering Group\Desktop\4-Unit\dwg Files\SD4 Structural Details.dwg
Jul 26, 2023, 1:00pm

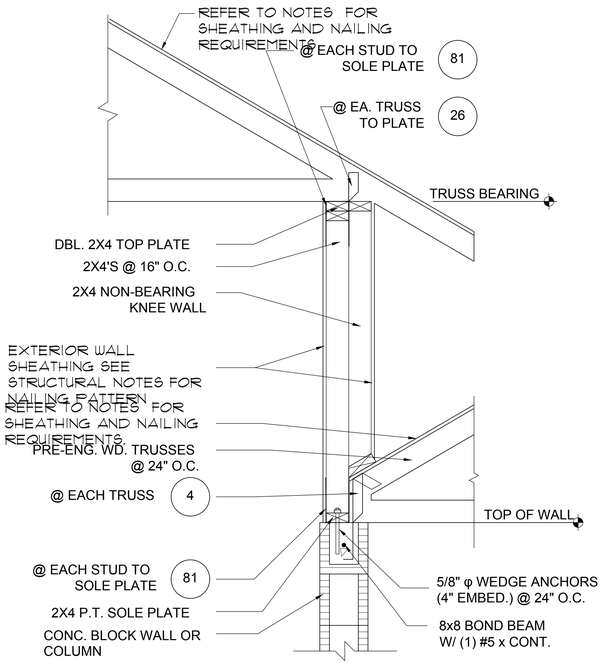

1 D5 DETAIL
1/2"= 1'-0" (11X17) 1"= 1'-0" (22"X34")

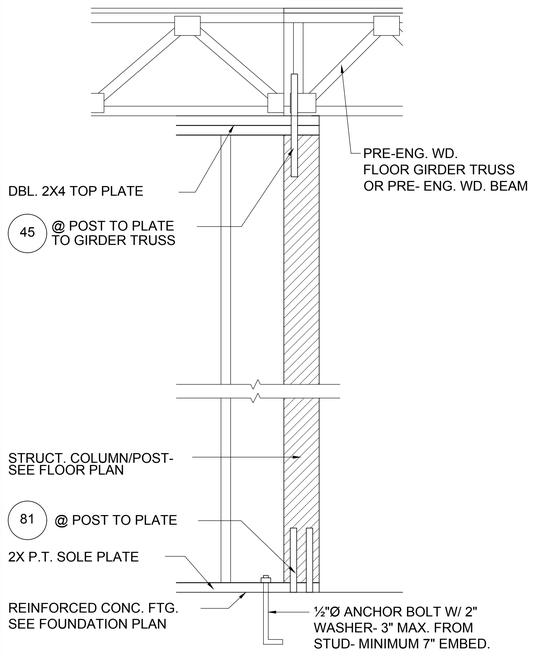

2 D5 DETAIL
1/2"= 1'-0" (11X17) 1"= 1'-0" (22"X34")

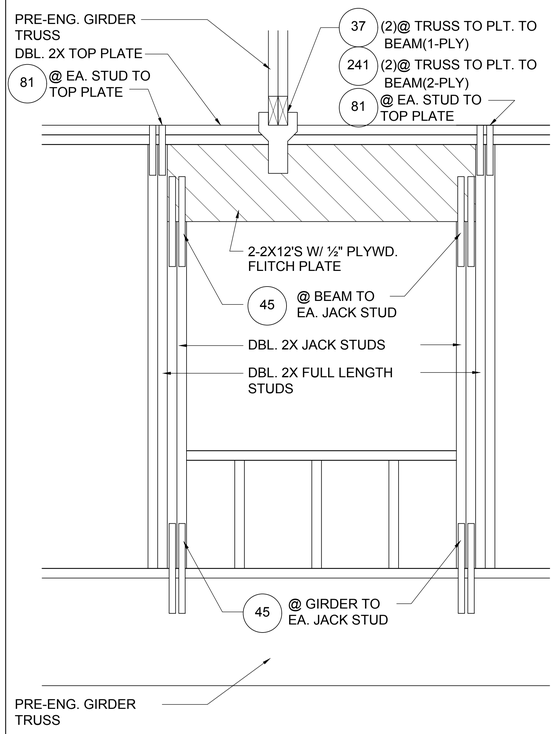

3 D5 DETAIL
1/2"=1'-0" (11X17) 1"=1'-0" (22X34)

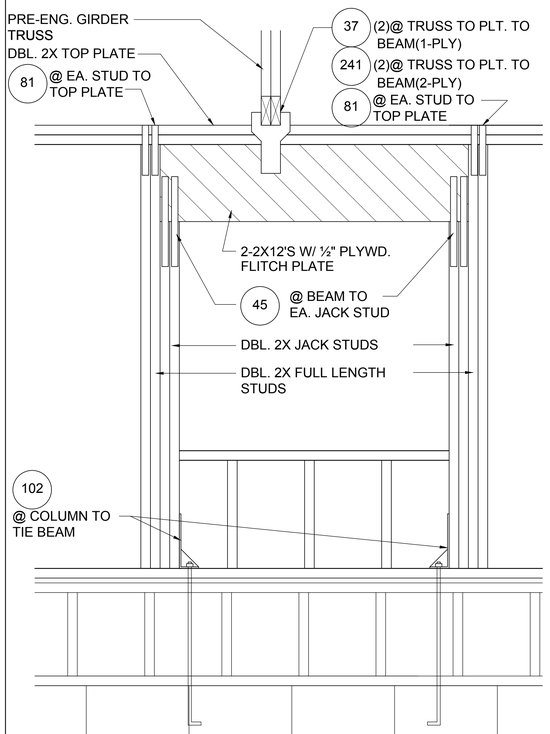

4 D5 DETAIL
1/2"=1'-0" (11X17) 1"=1'-0" (22X34)

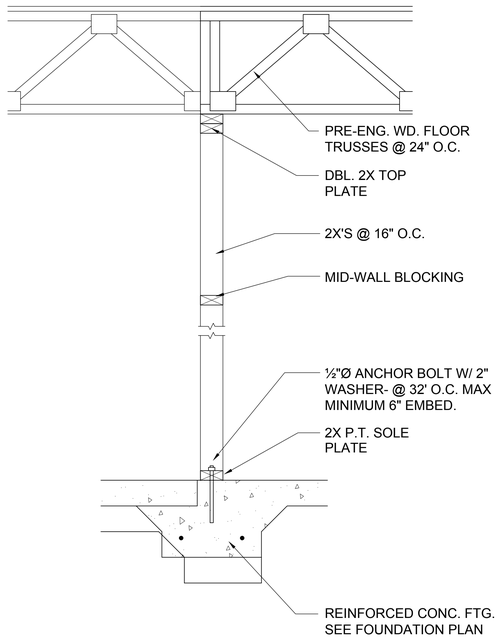

5 D5 DETAIL
1/2"=1'-0" (11X17) 1"=1'-0" (22X34)

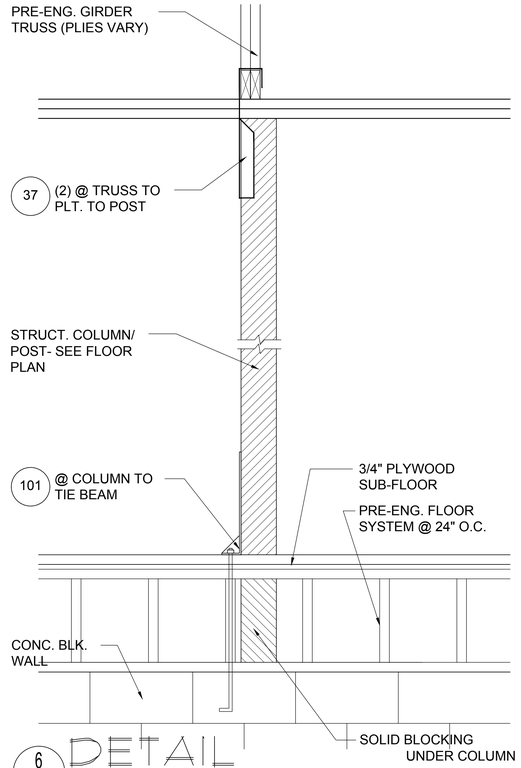

6 D5 DETAIL
1/2"=1'-0" (11X17) 1"=1'-0" (22X34)

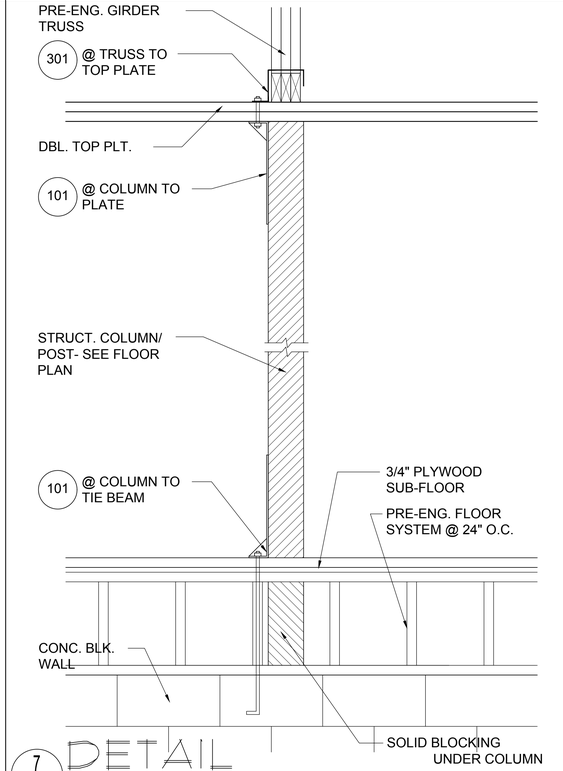

7 D5 DETAIL
1/2"=1'-0" (11X17) 1"=1'-0" (22X34)

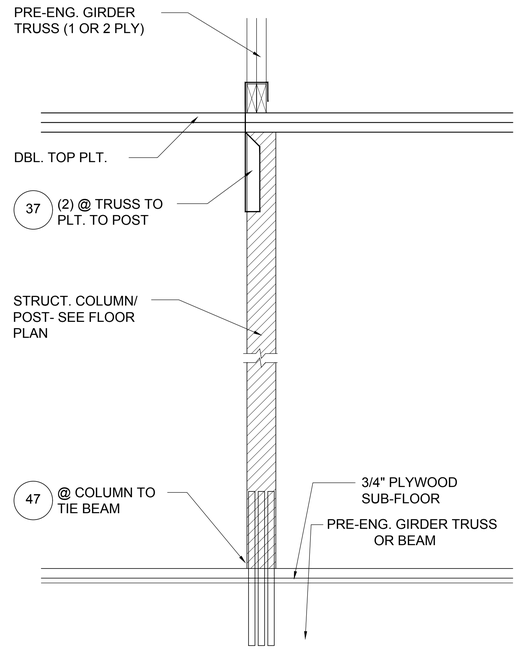

8 D5 DETAIL
1/2"= 1'-0" (11X17) 1"= 1'-0" (22"X34")

STRUCTURAL DETAILS

THOMPSON ENGINEERING GROUP, INC.
4401 Vineland Road Suite A6 Orlando, FL 32811
Ph: (407) 734-1790
Fax: (407) 734-1792
www.tegfl.com

MJS designers group
815 Orienta Ave., Suite #1040
Altamonte Springs, Fl. 32701
Ph: (407) 629-6711
Fax: (407) 629-6776
www.mjsdesignersgroup.com

AIBD
GOBA GREATER ORLANDO BUILDERS ASSOCIATION

4-Unit: Rear Load Detached

Models: Tyler, Jackson, Grant & Monroe
Building Pad #XX
Lot# XX-XX, Subdivision
Street Address
City, State, Zip Code

A division of Park Square Enterprises Inc.
5200 Vineland Rd. Suite #200
Orlando, Fl. 32811
Phone: (407) 329-3000

Park Square HOMES

ISSUE DATE	02/15/2023
REVISIONS	
PROJECT:	22-1148
SCALE:	AS NOTED
DRAWN BY:	M.C.
DESIGNED BY:	MJS

D5

Design f:\Users\Design1\OneDrive - Thompson Engineering Group\Desktop\4-Unit\dwg Files\SD5 Structural Details.dwg
Jul 26, 2023, 1:00pm

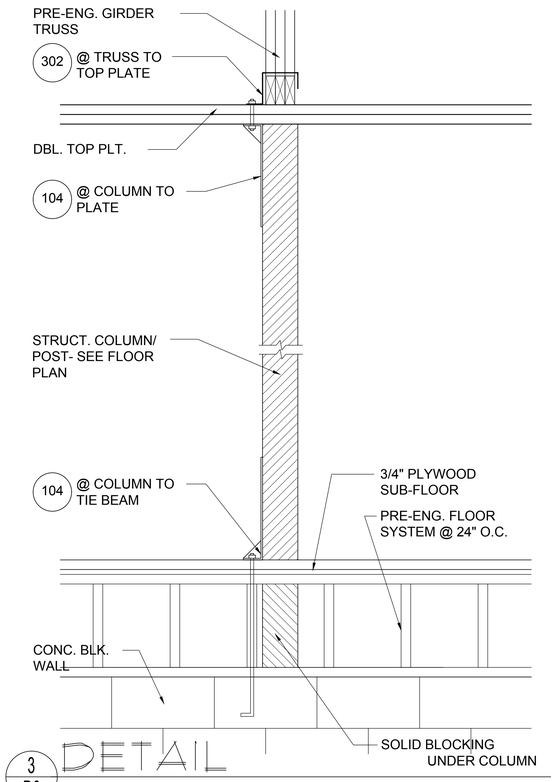

3 D6 DETAIL
1/2"=1'-0" (11X17) 1"=1'-0" (22X34)

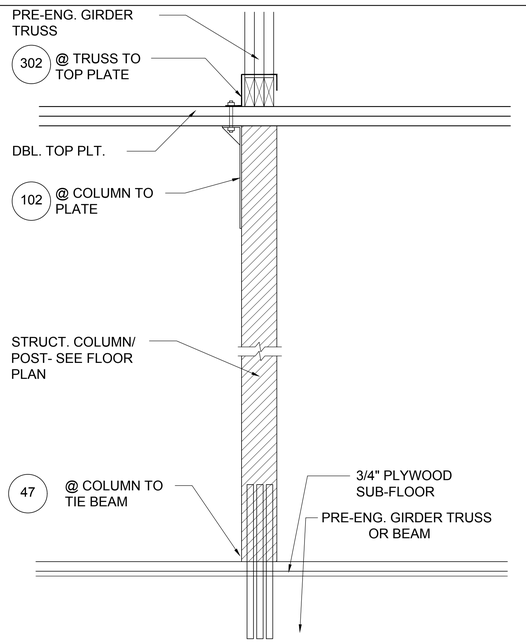

4 D6 DETAIL
1/2"=1'-0" (11X17) 1"=1'-0" (22X34)

NOTE:
1/2" PLYWOOD OR 7/16" O.S.B. TO BE USED AS UPLIFT RESISTANCE NO OTHER FASTENERS REQ'D. EXCEPT AS NOTED ON PLANS IN TWO STORY FRAME APPLICATIONS, SHEATHING SHALL EXTEND MIN. 1'-0" W/O BREAK ABV. 2nd FLOOR BOTTOM PLT. TO T.O.M.

NAILING SCHEDULE:
(2)ROWS @ 3" O.C. AT TOP AND (1)ROW AT BOTTOM OF WALL, 6" O.C. ALL OTHER EDGES AND 12" IN FIELD. BLOCKING SHALL BE PLACED AT ALL SHEATHING JOINTS.

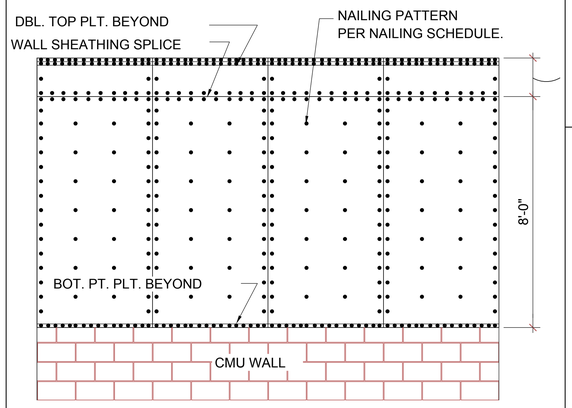

A SHEATHING ELEV. BALLOON FRAMING N.T.S.

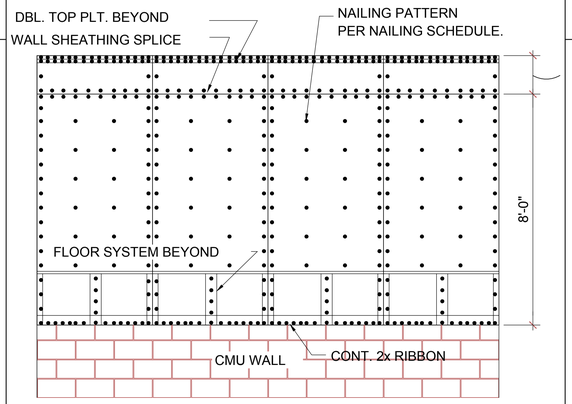

B SHEATHING ELEV. 2-STORY FRAMING N.T.S.

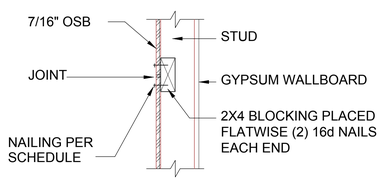

C SHEATHING BLOCKING @HORIZONTAL JOINTS N.T.S

5 D6 SHEATHING UPLIFT DETAILS

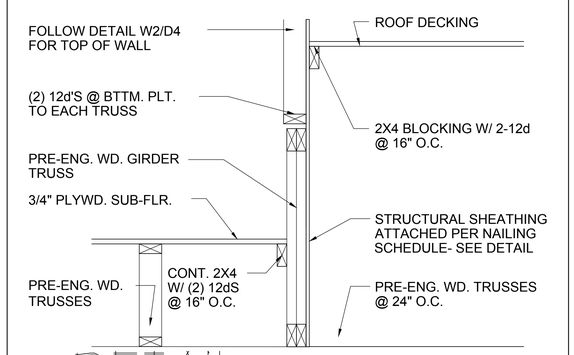

6 D6 DETAIL
1/2"=1'-0" (11X17) 1"=1'-0" (22X34)

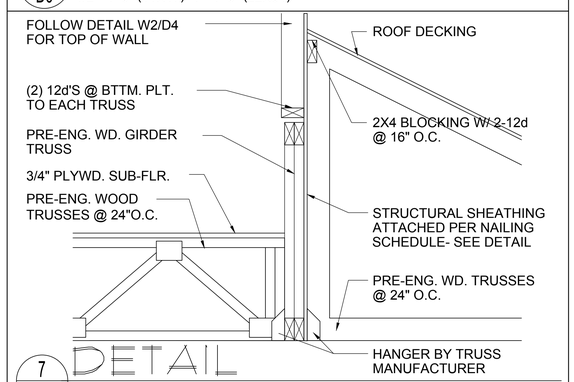

7 D6 DETAIL
1/2"=1'-0" (11X17) 1"=1'-0" (22X34)

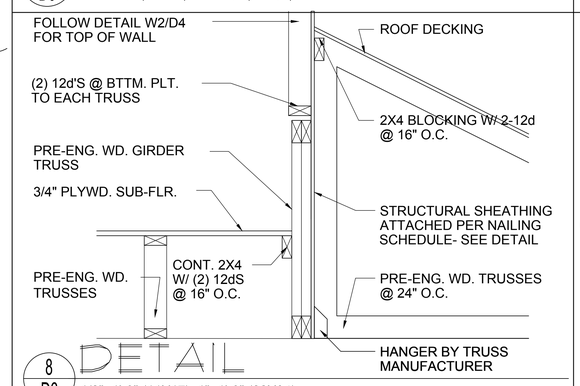

8 D6 DETAIL
1/2"=1'-0" (11X17) 1"=1'-0" (22X34)

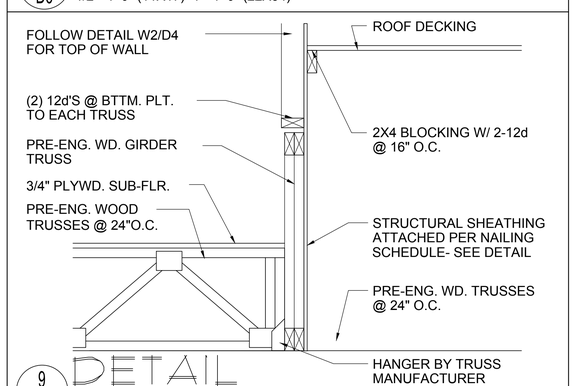

9 D6 DETAIL
1/2"=1'-0" (11X17) 1"=1'-0" (22X34)

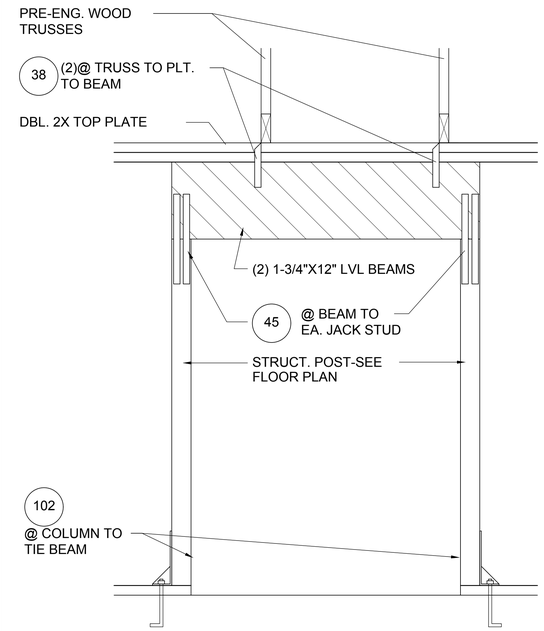

10 D6 DETAIL
1/2"=1'-0" (11X17) 1"=1'-0" (22X34)

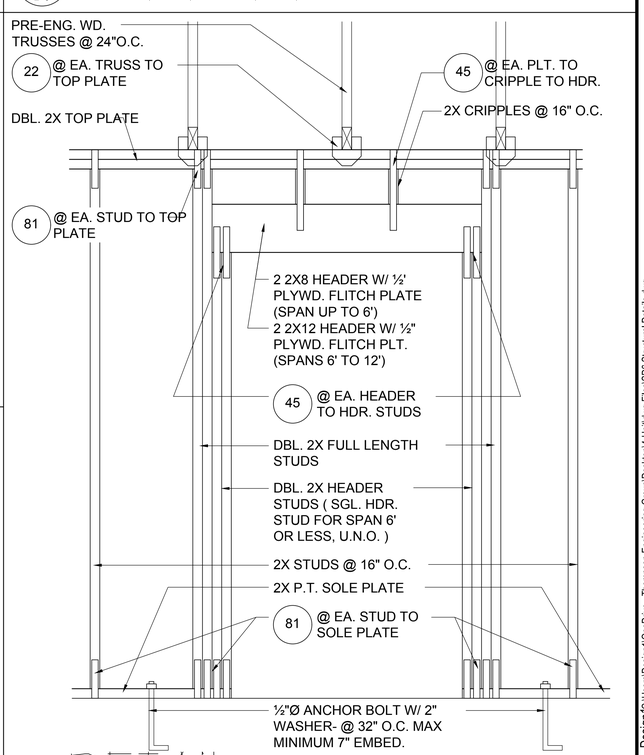

11 D6 DETAIL (BRG. W/ UPLIFT)
1/2"=1'-0" (11X17) 1"=1'-0" (22X34)

TEG
THOMPSON ENGINEERING GROUP, INC.
4401 Vineland Road Suite A6 Orlando, FL 32811
Ph: (407) 734-1790
Fax: (407) 734-1790
www.tegfl.com

MJS designers group
residential+commercial+architecture
815 Orienta Ave., Suite #1040
Altamonte Springs, Fl. 32701
Ph: (407) 629-6711
Fax: (407) 629-6776
www.mjsdesignersgroup.com

AIBD
GOBA GREATER ORLANDO BUILDERS ASSOCIATION

4-Unit: Rear Load Detached
Models: Tyler, Jackson, Grant & Monroe
Building Pad #XX
Lot# XX-XX, Subdivision
Street Address
City, State, Zip Code

A division of Park Square Enterprises Inc.
5200 Vineland Rd. Suite #200
Orlando, Fl. 32811
Phone: (407) 529-3000
Park Square HOMES

ISSUE DATE	02/15/2023
REVISIONS	
PROJECT:	22-1148
SCALE:	AS NOTED
DRAWN BY:	M.C.
DESIGNED BY:	MJS

STRUCTURAL DETAILS
D6

Design f:\C:\Users\Design1\OneDrive - Thompson Engineering Group\Desktop\4-Unit\dwg Files\SDB Structural Details.dwg
Jul 26, 2023, 1:00pm

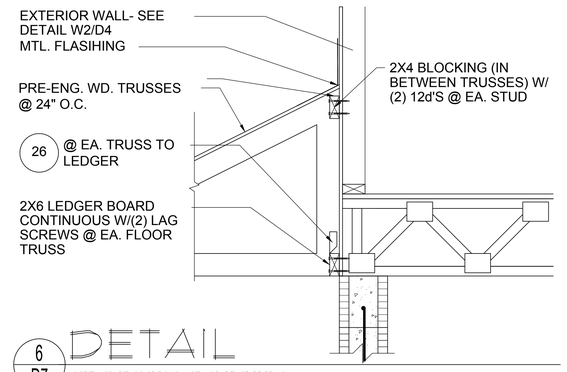

6 D7 DETAIL
1/2"=1'-0" (11X17) 1"=1'-0" (22X34)

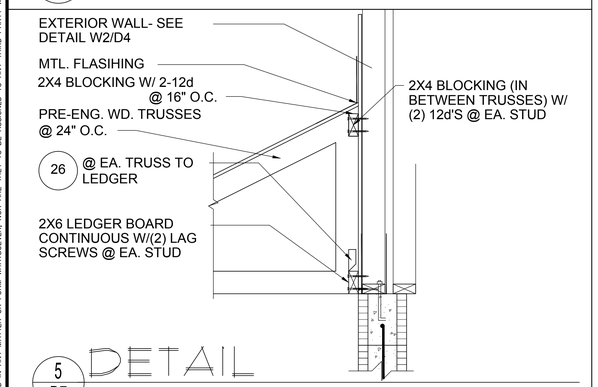

5 D7 DETAIL
1/2"=1'-0" (11X17) 1"=1'-0" (22X34)

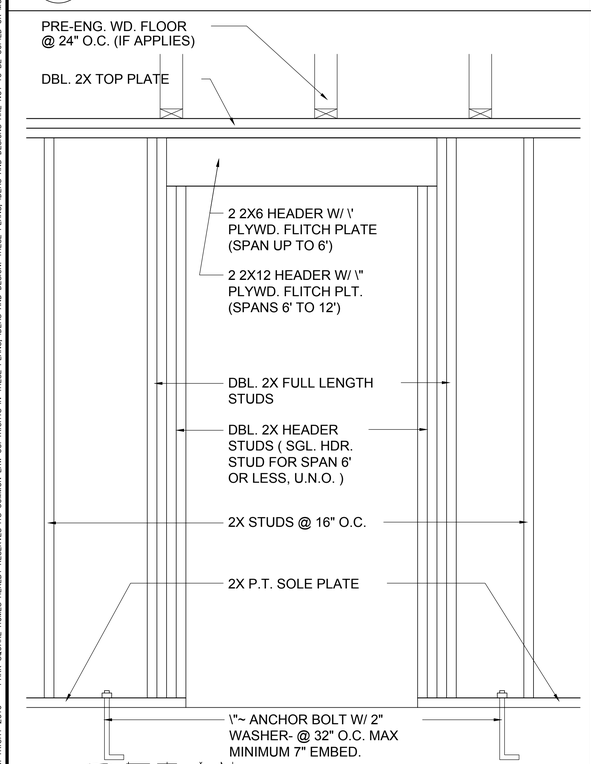

4 D7 DETAIL (BRG. W/O UPLIFT)
1/2"=1'-0" (11X17) 1"=1'-0" (22X34)

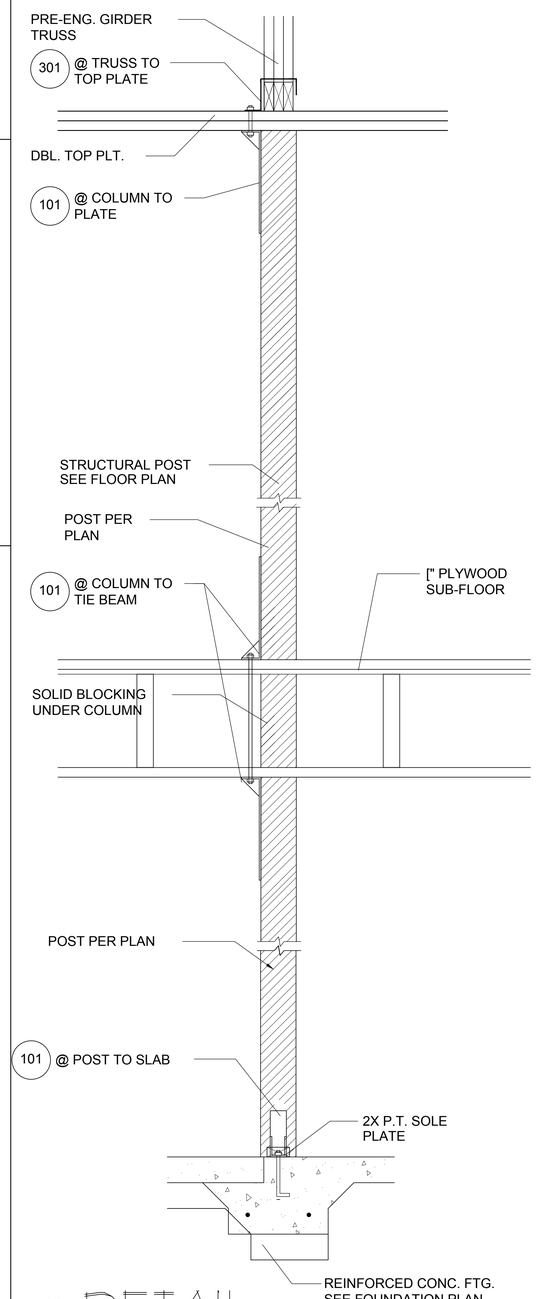

3 D7 DETAIL
1/2"=1'-0" (11X17) 1"=1'-0" (22X34)

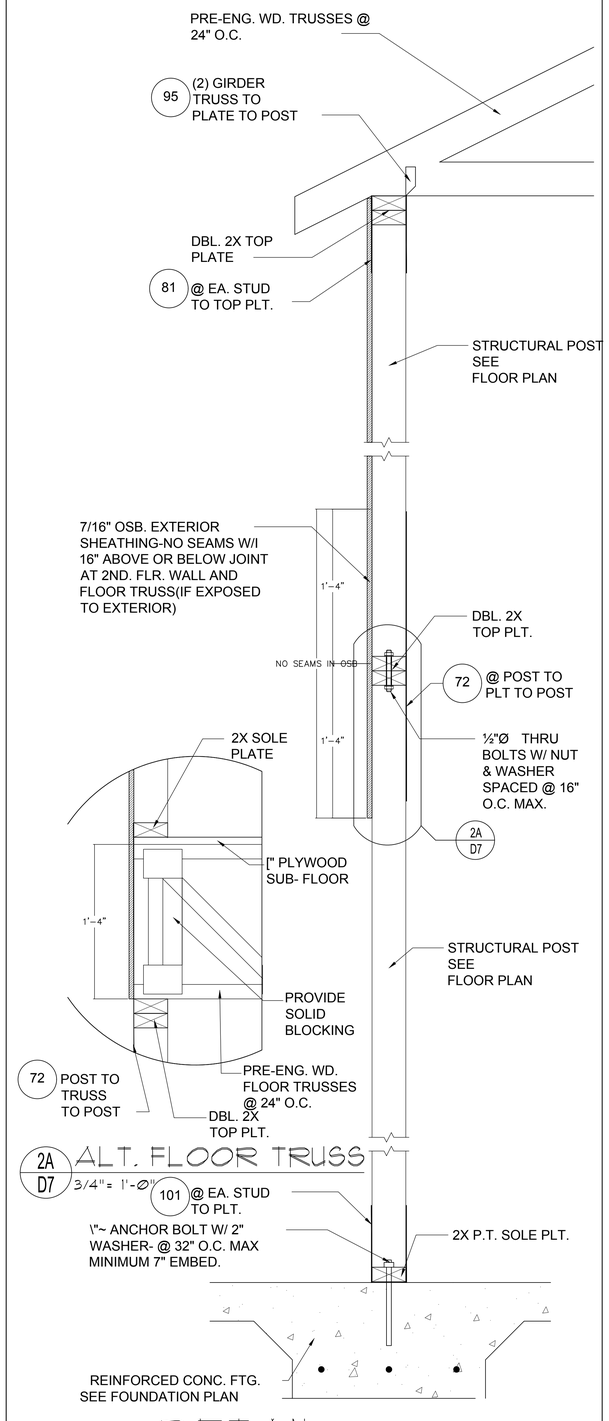

2A D7 ALT. FLOOR TRUSS
3/4"= 1'-0"

2 D7 DETAIL
3/4"=1'-0" (11X17) 1\"=1'-0" (22X34)

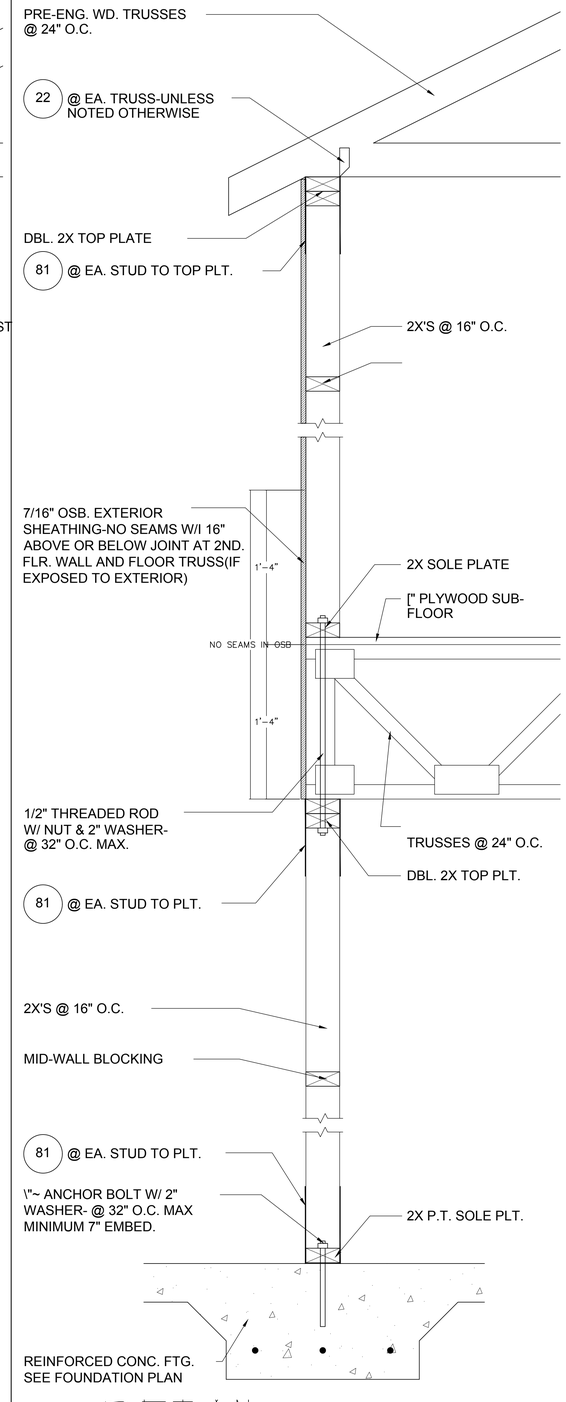

1 D7 DETAIL
3/4"=1'-0" (11X17) 1\"=1'-0" (22X34)

THOMPSON ENGINEERING GROUP, INC.
4401 Vineland Road Suite A6 Orlando, FL 32811
Ph: (407) 734-1790
Fax: (407) 734-1790
www.tegfl.com

815 Orienta Ave., Suite #1040
Altamonte Springs, Fl. 32701
Ph: (407) 629-6711
Fax: (407) 629-6776
www.mjsdesignersgroup.com

MJS designers group
residential•commercial•architecture

AIBD

GOBA GREATER ORLANDO BUILDERS ASSOCIATION

4-Unit: Rear Load Detached

Models: Tyler, Jackson, Grant & Monroe

Building Pad #XX
Lot# XX-XX, Subdivision
Street Address
City, State, Zip Code

A division of Park Square Enterprises Inc.
5200 Vineland Rd. Suite #200
Orlando, Fl. 32811
Phone: (407) 529-3000

Park Square HOMES

ISSUE DATE	02/15/2023
REVISIONS	
PROJECT:	22-1148
SCALE:	AS NOTED
DRAWN BY:	M.C.
DESIGNED BY:	MJS.

STRUCTURAL DETAILS
D7

Design f:\c:\Users\Design1\OneDrive - Thompson Engineering Group\Desktop\4-Unit\dwg Files\SD7 Structural Details.dwg
Jul 26, 2023, 1:00pm

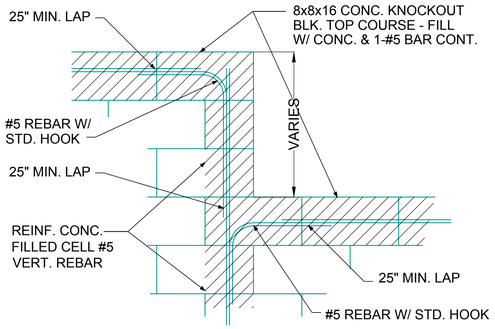

1 / D8 BLOCK WALL HT. TRANSITION

1/2"=1'-0" (11X17) 1"=1'-0" (22X34)

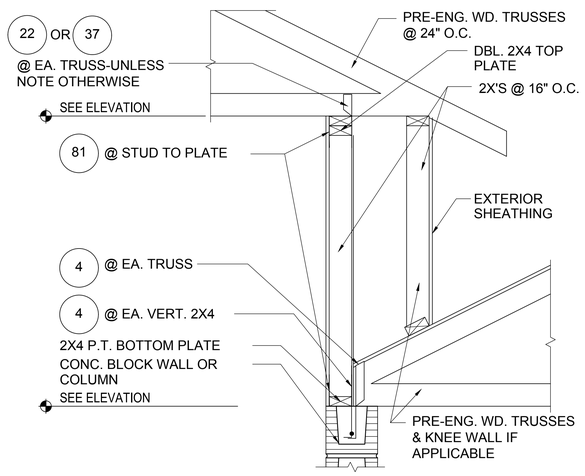

2 / D8 DETAIL

1/2"=1'-0" (11X17) 1"=1'-0" (22X34)

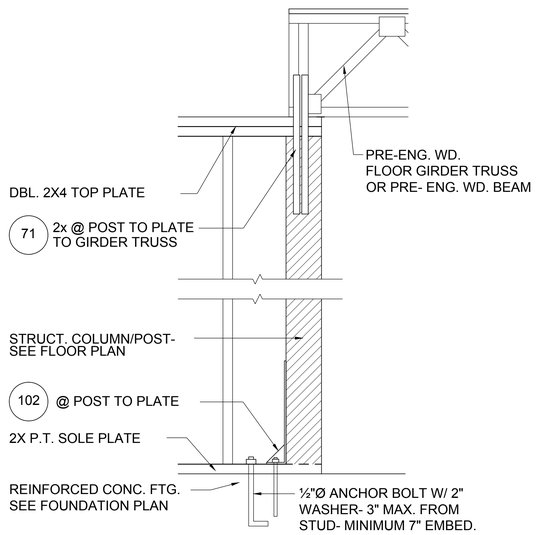

3 / D8 DETAIL

1/2"=1'-0" (11X17) 1"=1'-0" (22X34)

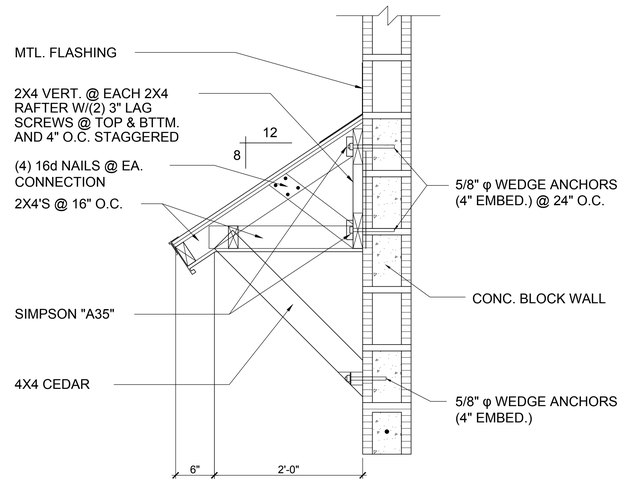

4 / D8 SHED ROOF DETAIL

1/2"= 1'-0" (11X17) 1"= 1'-0" (22"X34")

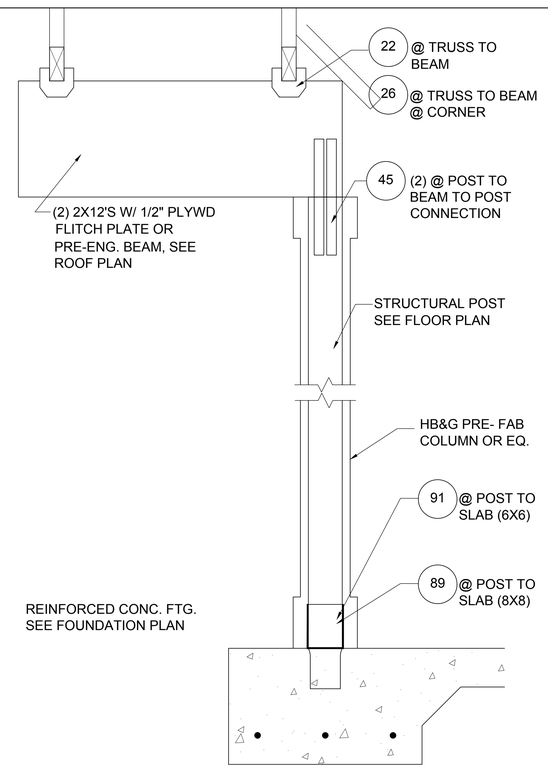

5 / D8 DETAIL

1/2"=1'-0" (11X17) 1"=1'-0" (22X34)

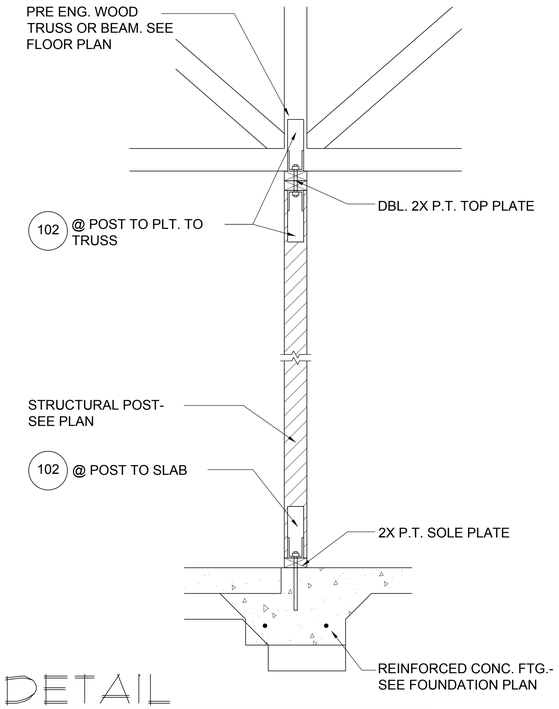

6 / D8 DETAIL

1/2"=1'-0" (11X17) 1"=1'-0" (22X34)

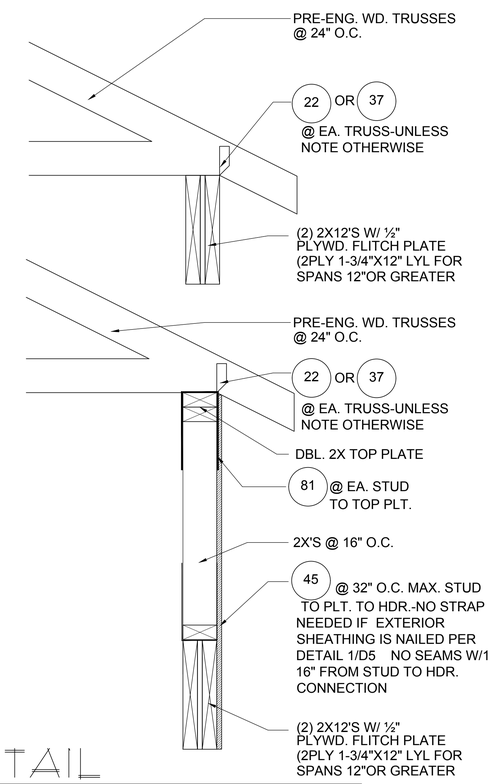

7 / D8 DETAIL

1/2"=1'-0" (11X17) 1"=1'-0" (22X34)

THOMPSON ENGINEERING GROUP, INC.
4401 Vineland Road Suite A6 Orlando, FL 32811
Phone: (407) 734-1790
Fax: (407) 734-1790
www.tegfl.com

815 Orienta Ave., Suite #1040
Altamonte Springs, Fl. 32701
Ph: (407) 629-6711
Fax: (407) 629-6776
www.mjsdesignersgroup.com

designers group
residential+commercial+architecture

4-Unit: Rear Load Detached

Models: Tyler, Jackson, Grant & Monroe

Building Pad #XX
Lot# XX-XX, Subdivision
Street Address
City, State, Zip Code

A division of Park Square Enterprises Inc.
5200 Vineland Rd. Suite #200
Orlando, Fl. 32811
Phone: (407) 529-3000

ISSUE DATE	02/15/2023
REVISIONS	
PROJECT:	22-1148
SCALE:	AS NOTED
DRAWN BY:	M.C.
DESIGNED BY:	MJS

STRUCTURAL DETAILS

D8

Design:C:\Users\Design1\OneDrive - Thompson Engineering Group\Desktop\4-Unit\dwg Files\SD8 Structural Details.dwg

Jul 28, 2023, 1:06pm

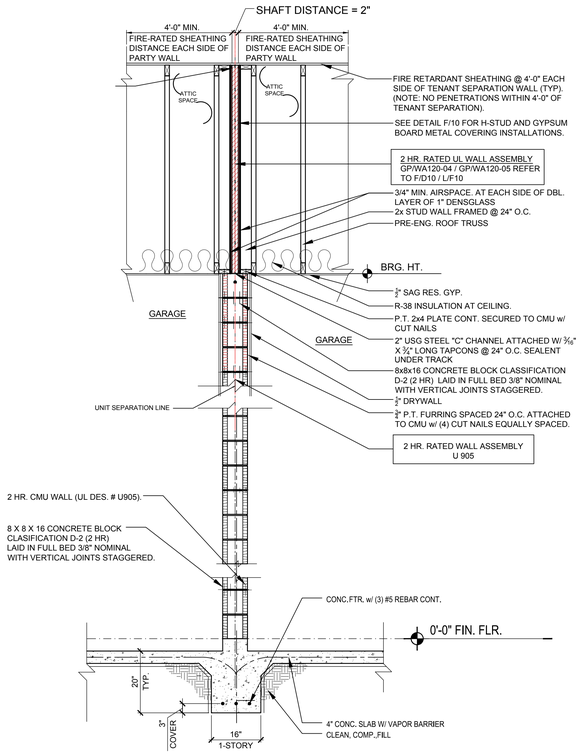

A2 D9 WALL SECTION AT GARAGE

N.T.S.

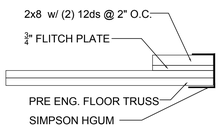

TOP VIEW

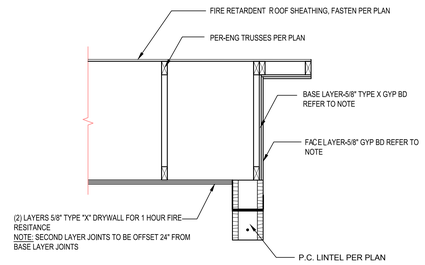

NOTE:

PER PRESCRIPTIVE FBC 721.1 (3) ITEM 21-1.1 CONT

BASE LAYER 5/8" TYPE X GYPSUM WALL BOARD APPLIED @ RIGHT ANGLES TO JOIST OR TRUSS 24" O.C. W/ 1 1/4" TYPE S OR W DRY WALL SCREW 24" O.C.
FACE LAYER 5/8" TYPE X GYPSUM WALL BOARD OR VENEER BASE APPLIED AT RIGHT ANGLES TO JOIST OR TRUSS THROUGH BASE LAYER W/ 1 7/8" TYPE S OR W DRY WALL SCREWS @ 12" O.C. AT JOINTS AND INTERMEDIATE JOISTS OR TRUSS. FACE LAYER TYPE G DRYWALL SCREWS PLACED 2" BACK ON EITHER SIZE OF FACE LAYER END JOINTS 12" O.C.

G D9 1-HR FIRED RATE @ GABLE CEILING

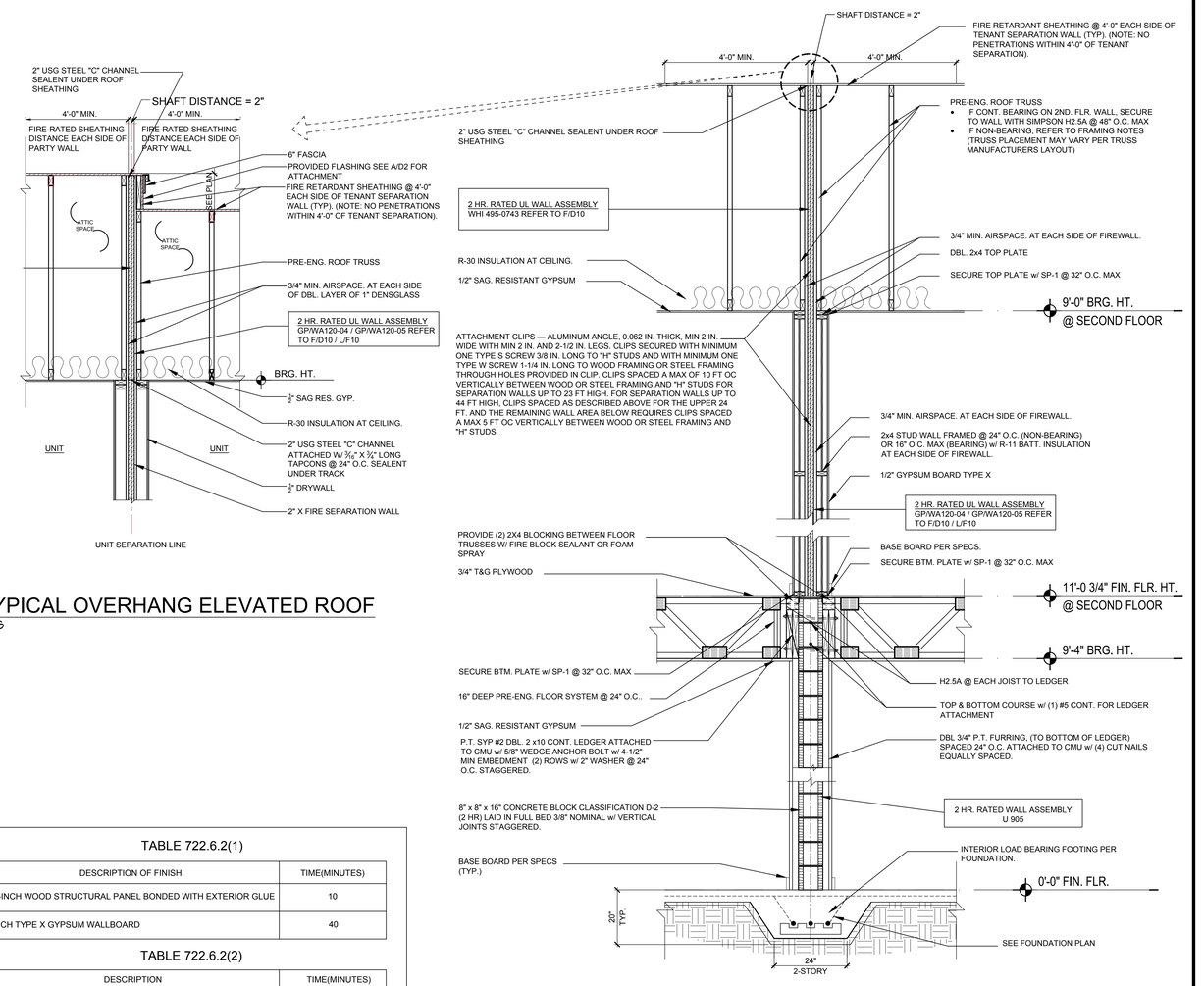

TYPICAL OVERHANG ELEVATED ROOF

N.T.S

A1 D9 PARTY WALL SECTION

N.T.S.

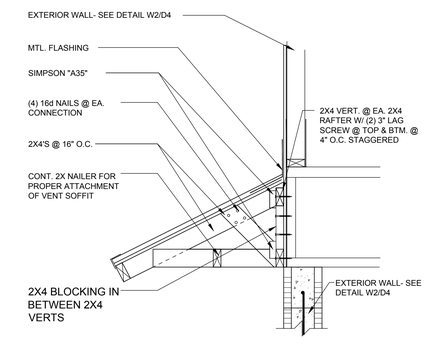

CONV. FRAME OVERHANG

1/2"=1'-0" (11X17) 1"=1'-0" (22X34)

TABLE 722.6.2(1)

DESCRIPTION OF FINISH	TIME(MINUTES)
15/32-INCH WOOD STRUCTURAL PANEL BONDED WITH EXTERIOR GLUE	10
5/8-INCH TYPE X GYPSUM WALLBOARD	40

TABLE 722.6.2(2)

DESCRIPTION	TIME(MINUTES)
WOOD STUDS 16 INCHES O.C.	20

TOTAL	70 MINUTE EXTERIOR WALL ASSEMBLY

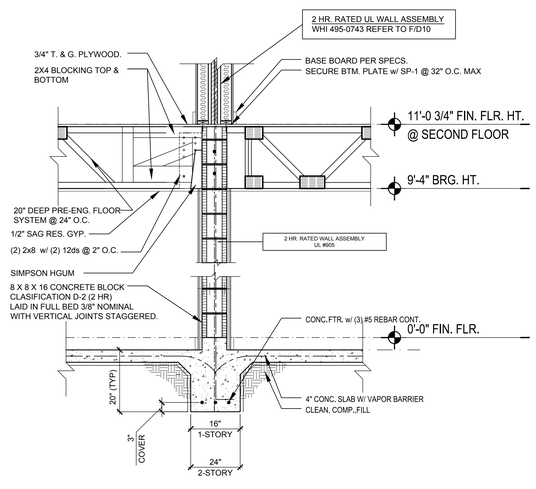

A3 D9 DETAIL

N.T.S

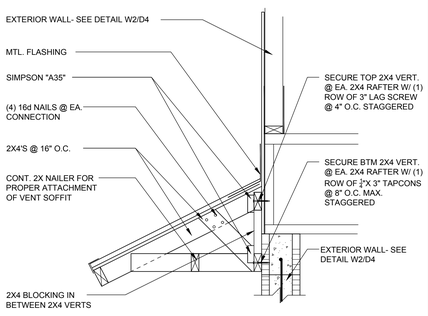

A4 D9 CONV. FRAME OVERHANG

1/2"=1'-0" (11X17) 1"=1'-0" (22X34)

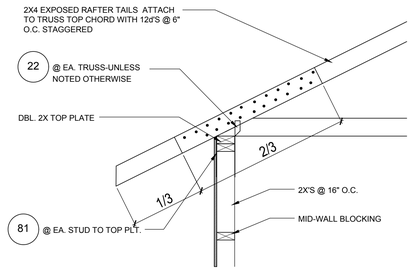

A5 D9 DETAIL

1/2"=1'-0" (11X17) 1"=1'-0" (22X34)

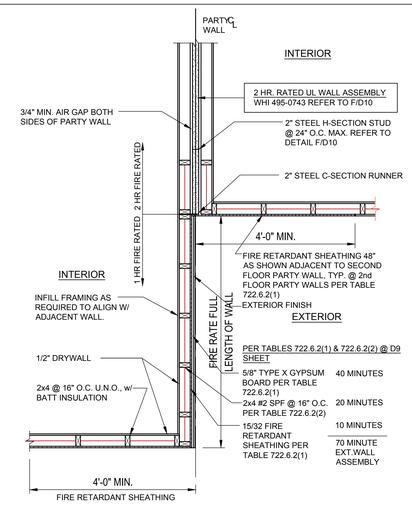

A6 D9 2 HR. TO 1HR. FIRE RATED WALL @ 2nd FLOOR OFFSET EXTERIOR WALL DETAIL

N.T.S.

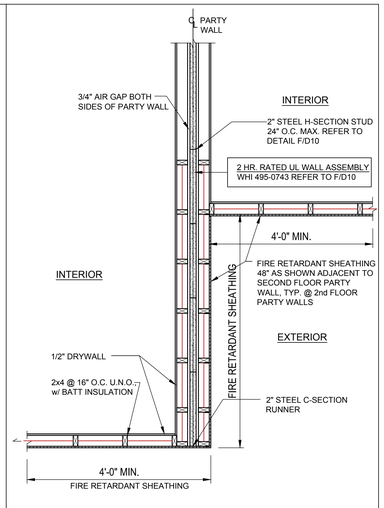

A7 D9 2 HR. FIRE RATED WALL @ 2nd FLOOR OFFSET EXTERIOR WALL DETAIL

N.T.S.

FIND US ON FACEBOOK & HOUZZ AT MJS CUSTOM HOME DESIGNS

THOMPSON ENGINEERING GROUP, INC.
4401 Vineland Road Suite #J Orlando, FL 32811
Ph: (407) 734-1459
Fax: (407) 734-1790
www.tegfl.com

815 Orienta Ave., Suite #1040
Altamonte Springs, Fl. 32701
Ph: (407) 629-6711
Fax: (407) 629-6776
www.mjsdesignersgroup.com
COPYRIGHT NOTICE: THESE PLANS, DESIGNS, AND IDEAS ARE THE EXCLUSIVE INTELLECTUAL PROPERTY OF MJS, INC. ALL RIGHTS RESERVED.
MJS designers group
residential-commercial-architecture

GOBA GREATER ORLANDO BUILDERS ASSOCIATION

4-Unit: Rear Load Detached

Models: Tyler, Jackson, Grant & Monroe

Building Pad #XX
Lot# XX-XX, Subdivision
Street Address
City, State, Zip Code

A division of Park Square Enterprises Inc.
5200 Vineland Rd. Suite #200
Orlando, Fl. 32811
Phone: (407) 529-3000

Design Fc:\Users\Design1\OneDrive - Thompson Engineering Group\Desktop\4-Unit\dwg Files\SD9 Fire Separation Details .dwg

Jul 26, 2023 1:00pm

ISSUE DATE	02/15/2023
REVISIONS	
PROJECT:	22-1148
SCALE:	AS NOTED
DRAWN BY:	M.C.
DESIGNED BY:	MJS

FLOOR TRUSSES

D9

intertek
Total Quality. Assured.

Assemblies

Division 09 – Finishes
09 21 00 Plaster and Gypsum Board Assemblies
09 21 16.33 Gypsum Board Area Separation Wall

Georgia-Pacific Gypsum, LLC
Design No. GP/WA 120-05
Non-Bearing Wall Assembly
Area Separation Wall
ASTM E119
Rating: 2 hours

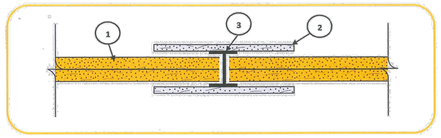

1. **CERTIFIED MANUFACTURER:** Georgia-Pacific Gypsum, LLC

   CERTIFIED PRODUCT: Gypsum Shaftliner

   CERTIFIED MODEL: ToughRock Shaftliner or DensGlass Shaftliner

   Gypsum Shaftliner: Two layers 1-in. (25.4 mm) ToughRock Shaftliner or DensGlass Shaftliner inserted in H-Studs 24-in. (610 mm) o.c.

2. **Gypsum Board:** Metal covered using 6-in. (152 mm) wide ½-in. (12.7 mm) DensArmor Plus Fireguard C Interior Panels or ½-in. (12.7 mm) ToughRock Fireguard C gypsum board.

3. **Steel Studs:** 'H' shaped Studs, 1-1/2-in. (38.1 mm) wide × 2-in. (50.8 mm) deep, roll-formed from minimum 0.018-in. thick galvanized steel. Cut to length ½-in. less than the openings height and spaced a maximum of 24-in. (610 mm) o.c.

WARNOCK HERSEY INTERNATIONAL INC. WHI-495-0743/0744 PAGE 18 OF 40

FIGURE #1
"H" STUD AND "U" TRACK

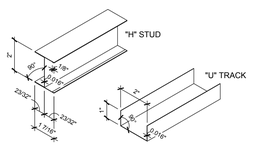

WARNOCK HERSEY INTERNATIONAL INC. WHI-495-0743/0744 PAGE 19 OF 40

FIGURE #2
ELEVATION - SCREW LOCATIONS

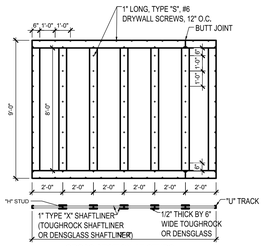

WARNOCK HERSEY INTERNATIONAL INC. WHI-495-0743/0744 PAGE 20 OF 40

FIGURE #3
CROSS SECTION DETAIL AT STUD

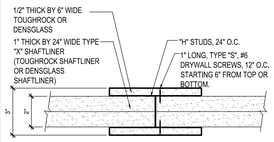

WARNOCK HERSEY INTERNATIONAL INC. WHI-495-0743/0744 PAGE 21 OF 40

FIGURE #4
TOP OR BOTTOM DETAIL BETWEEN STUDS OR END DETAIL

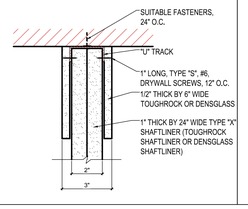

WARNOCK HERSEY INTERNATIONAL INC. WHI-495-0743/0744 PAGE 22 OF 40

FIGURE #5
TOP OR BOTTOM DETAIL AT STUDS

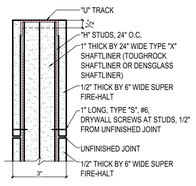

F 2HR. EXT. FIREWALL ASSEMBLY WHI-495-0743

Two layers 1" (25.4 mm) ToughRock Shaftliner or DensGlass® Shaftliner inserted in H-Studs 24" (610 mm) o.c. Min. 3/4" (19 mm) air space on both sides must be maintained between liner panels and adjacent framing. Sound Tested with 2"x 4" stud wall with 1/2" (12.7 mm) ToughRock® Fireguard C gypsum wallboard or DensArmor Plus® Fireguard C panels each side of assembly and 3-1/2" (89 mm) fiberglass insulation in stud space both sides. Breakaway clip facings and height of wall differ between UL Design U373 and WHI GP/WA 120-04. Please consult each listing for specific information.

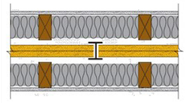

Approved for Assembly:

DensGlass® Shaftliner Panel

ToughRock Shaftliner

DensArmor Plus Fireguard C

ToughRock Fireguard C

Hourly Rating: **2-hour**

STC Rating: **65-69 STC**

Fire Test Reference: **UL U373, ULC W312, WHI GP/WA 120-04, cUL U373, GA ASW 0810**

Sound Test Reference: **RAL TL10-291**

NOTE: 6" STRIPS OVER "H" STUD IS NOT REQUIRED IF ¾" AIR SPACE IS MAINTAINED WHEN USING GP/WA 120-04

L 2HR. EXT. FIREWALL ASSEMBLY GP/WA 120-04

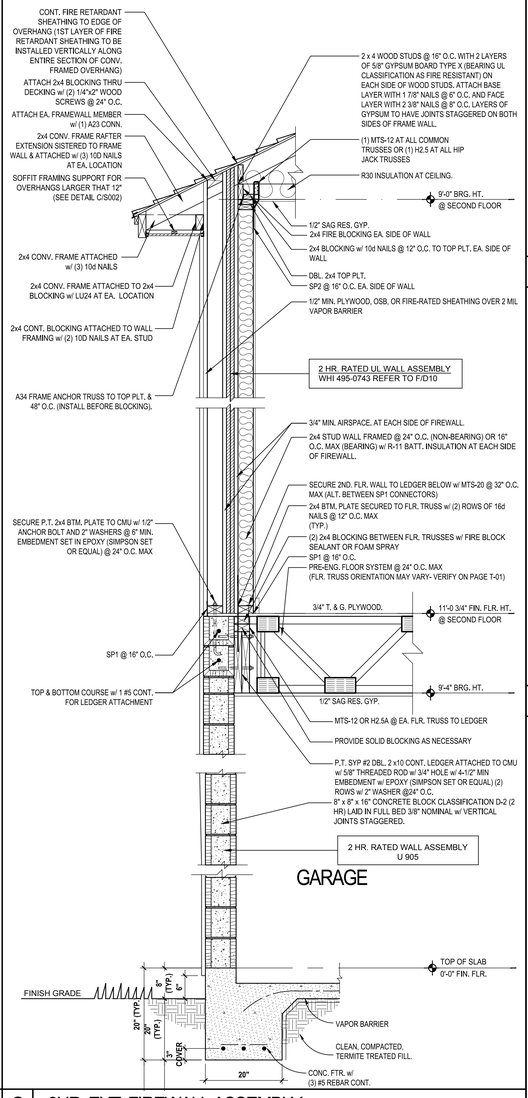

G 2HR. EXT. FIREWALL ASSEMBLY

SCALE: 1/4" = 1'-0"

Design No. U905

November 09, 2020

Bearing Wall Rating — 2 HR.

Nonbearing Wall Rating — 2 HR

This design was evaluated using a load design method other than the Limit States Design Method (e.g., Working Stress Design Method). For jurisdictions employing the Limit States Design Method, such as Canada, a load restriction factor shall be used — See Guide BXUV or BXUV7

*** Indicates such products shall bear the UL or cUL Certification Mark for jurisdictions employing the UL or cUL Certification (such as Canada), respectively.**

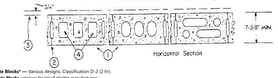

1. **Concrete Blocks*** — Various designs. Classification D-2 (2 hr).
See **Concrete Blocks** category for list of eligible manufacturers.

2. **Mortar** — Blocks laid in full bed of mortar, nom. 3/8 in. thick, of not less than 2-1/4 and not more than 3-1/2 parts of clean sharp sand to 1 part Portland cement (proportioned by volume) and not more than 50 percent hydrated lime (by cement volume). Vertical joints staggered.

3. **Portland Cement Stucco or Gypsum Plaster** — Add 1/2 hr to classification if used. Where combustible members are framed in wall, plaster or stucco must be applied on the face opposite framing to achieve a max. Classification of 1-1/2 hr. Attached to concrete blocks (Item 1).

4. **Loose Masonry Fill** — If all core spaces are filled with loose dry expanded slag, expanded clay or shale (Rotary Kiln Process), water repellant vermiculite masonry fill insulation, or silicone treated perlite loose fill insulation add 2 hr to classification.

5. **Foamed Plastic*** — (Optional-Not Shown) — 1-1/2 in. thick max. 4 ft wide sheathing attached to concrete blocks (Item 1).
ATLAS ROOFING CORP — "EnergyShield Pro Wall Insulation", "EnergyShield Pro 2 Wall Insulation", EnergyShield EGF Pro and EnergyShield Ply Pro.

CARLISLE COATINGS & WATERPROOFING INC — Type R2+ SHEATHE

DUPONT DE NEMOURS, INC — Types Thermax Sheathing, Thermax Light Duty Insulation, Thermax Heavy Duty Insulation, Thermax Metal Building Board, Thermax White Finish Insulation, Thermax c Exterior Insulation, Thermax SARNAFIL c Exterior Insulation, Thermax IH Insulation, Thermax Plus Liner Panel, Thermax Heavy Duty Plus (HDP), TUFF-R™ c Insulation, Thermax Buller Stylwall Insulation Board and Thermax Morton Heavy Duty Insulation Board

FIRESTONE BUILDING PRODUCTS CO L L C — "Envergre™ C Foil Exterior Wall Insulation" and "Envergre™ Q Glass Exterior Wall Insulation"

HUNTER PANELS, A DIVISION OF CARLISLE CONSTRUCTION MATERIALS, LLC — Types "Xci-Class A", "Xci Foil (Class A)", "Xci 286"

RMAX, A BUSINESS UNIT OF SIGA CORPORATION — Types: "TSX-0550", "ECOMAX-I FR", "TSX-0510", "ECOMAX x FR White", "ECOMAX-I", "ECOMAX-I FR Air Barrier", "Thermasheath-35", "Thermasheath", "Duasheath", "Thermasheath-2", "Duasheath-2".

JOHNS MANVILLE — Type "AP Foil-Faced Foam Sheathing"

5A. **Building Units*** — As an alternate to Items 5, min. 1-in thick polyisocyanurate composite foamed plastic insulation boards, nom. 4ft by 4ft or 96 in.
HUNTER PANELS, A DIVISION OF CARLISLE CONSTRUCTION MATERIALS, LLC — "Xci NF", "Xci Ply"

RMAX, A BUSINESS UNIT OF SIGA CORPORATION — "Thermasheath-35", "ECOMAX-I", "Thermaflex-CI", "ECOMAX-I FR Ply", "ECOMAX-I Ply".

*** Indicates such products shall bear the UL or cUL Certification Mark for jurisdictions employing the UL or cUL Certification (such as Canada), respectively.**

Last Updated on 2020-11-09

DESIGN NO. U905

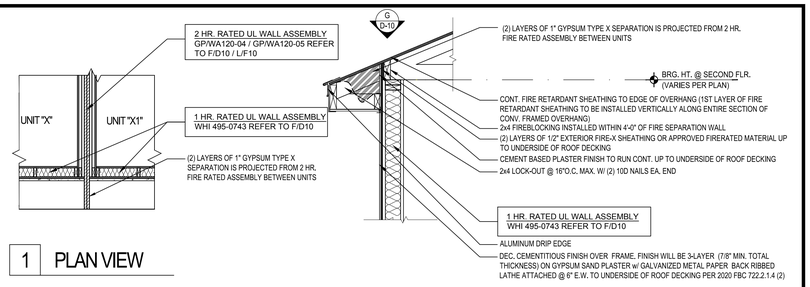

1 PLAN VIEW

H 2 HR. CONT. SOFFIT PROJECTION @ EAVES

SCALE: 1/4" = 1'-0"

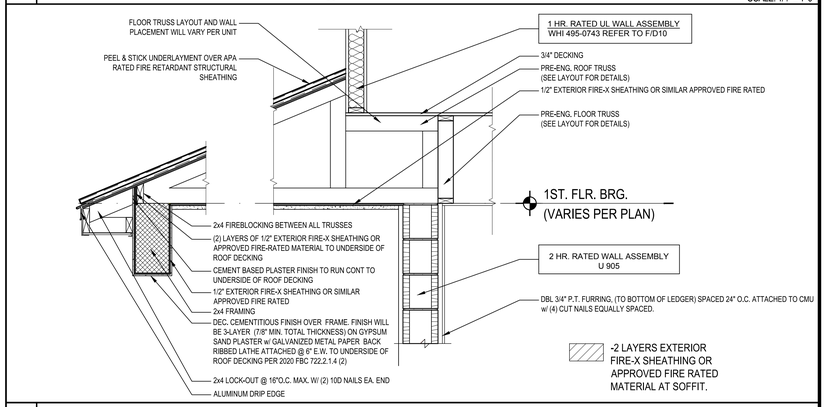

I 2HR. FRONT ENTRY EXT. FIREWALL ASSEMBLY

SCALE: 1/4" = 1'-0"

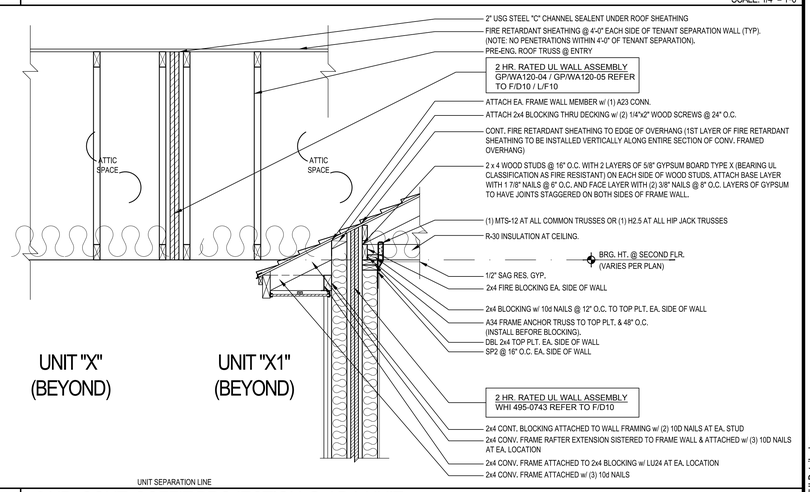

J 2 HR. CONT. SOFFIT PROJECTION @ ADJ. UNIT

SCALE: 1/4" = 1'-0"

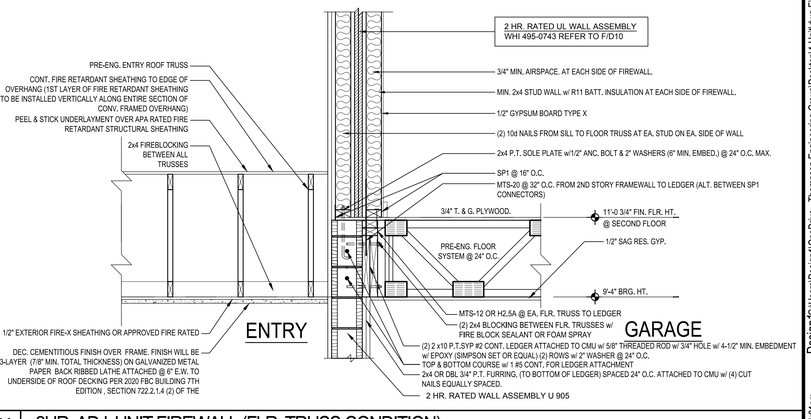

K 2HR. ADJ. UNIT FIREWALL (FLR. TRUSS CONDITION)

SCALE: 1/4" = 1'-0"

THOMPSON ENGINEERING GROUP, INC.
4401 Vineland Road Suite 40 Orlando, FL 32811
Ph: (407) 734-1459
Fax: (407) 734-1790
www.tegfl.com

815 Orienta Ave., Suite #1040
Altamonte Springs, Fl. 32701
Ph: (407) 629-6711
Fax: (407) 629-6776
www.mjsdesignersgroup.com

MJS designers group
residential-commercial-architecture

GOBA
GREATER ORLANDO BUILDERS ASSOCIATION

4-Unit: Rear Load Detached

Models: Tyler, Jackson, Grant & Monroe

Building Pad #XX
Lot# XX-XX, Subdivision
Street Address
City, State, Zip Code

A division of Park Square Enterprises Inc.
5200 Vineland Rd. Suite #200
Orlando, Fl. 32811
Phone: (407) 529-3000

Park Square HOMES

ISSUE DATE	02/15/2023
REVISIONS	
PROJECT:	22-1148
SCALE:	AS NOTED
DRAWN BY:	M.C.
DESIGNED BY:	MJS

DETAILS
D10

Design FC:\Users\Design11\OneDrive - Thompson Engineering Group\Desktop\4-Unit\dwg Files\SD10 WHI Details.dwg
Jul 26, 2023, 1:10 pm