GENERAL ELECTRICAL NOTES

1. THE ELECTRICAL WORK IS SUBJECT TO ALL OF THE PURCHASER'S TERMS, CONDITIONS AND SPECIFICATIONS, INCLUDING WORKMANSHIP.
2. GENERAL WORK PRACTICES FOR ELECTRICAL CONSTRUCTION SHALL BE IN ACCORDANCE WITH NECA 1 "STANDARD FOR GOOD WORKMANSHIP IN ELECTRICAL CONSTRUCTION" (ANSI).
3. IT IS THE INTENT OF THESE ELECTRICAL DRAWING SHEETS TO CALL FOR FINISHED WORK; TESTED, AND READY FOR OPERATION. FOR THE ELECTRICAL WORK, "PROVIDE" IS AN ALL-INCLUSIVE TERM REQUIRING CONTRACTOR TO PROCURE, FABRICATE, FURNISH, INSTALL, MOUNT, WIRE, CONNECT AND SUPPLY ALL MATERIAL AND LABOR NECESSARY TO COMPLETE THE WORK TO THE ACCEPTANCE OF THE OWNER AND THE AUTHORITY HAVING JURISDICTION (AHJ).
4. ALL MATERIAL PROVIDED BY THE CONTRACTOR SHALL BE NEW AND FREE OF DEFECTS, LISTED/LABELED FOR THE INTENDED PURPOSE BY UNDERWRITERS LABORATORY (UL) OR OTHER ORGANIZATION THAT IS ACCEPTABLE TO THE AHJ.
5. ALL MATERIAL SHALL BE INSTALLED IN ACCORDANCE WITH THE MANUFACTURER'S WRITTEN INSTRUCTIONS. UON.
6. CONTRACTOR SHALL INSPECT SITE FOR FIELD VERIFICATION OF ALL ASPECTS OF THE WORK PRIOR TO BIDDING.
7. ALL DISCREPANCIES ON DRAWING SHALL BE BROUGHT TO THE ATTENTION OF THE ARCHITECT IN WRITING PRIOR TO SUBMISSION OF BIDS. CONTRACTORS SUBMISSION OF A BID CONSTITUTES ACCEPTANCE OF ALL CONDITIONS INCLUDING FIELD CONDITIONS.
8. THE CONTRACTOR SHALL OBTAIN AND FURNISH ALL REQUIRED PERMITS AND ARRANGE FOR ALL REQUIRED INSPECTIONS. THE CONTRACTORS BID SHALL INCLUDE COST OF ALL REQUIRED PERMITS AND FEES, INCLUDING UTILITY FEES.
9. THE ELECTRICAL SHEETS ARE DIAGRAMICAL IN NATURE AND INDICATE THE GENERAL LOCATION OF OUTLETS, EQUIPMENT, AND THE CIRCUIT ARRANGEMENT OF THE REQUIRED WIRING. ALTHOUGH THE DRAWINGS DO NOT NECESSARILY INDICATE THE ACTUAL ROUTES OF CONDUITS, WHERE INDICATED, THEY SHALL BE FOLLOWED AS CLOSELY AS PROPER COORDINATION WITH THE WORK OF OTHER TRADES AND SPACE WILL PERMIT. WHERE CONDUIT RUNS ARE NOT SHOWN ON THE DRAWINGS, COORDINATE CONDUIT RUNS WITH THE WORK OF OTHER TRADES AND STRUCTURE. SIMPLIFY INSTALLATION WHEREVER POSSIBLE, BUT SUBJECT TO APPROVAL BY THE ARCHITECT FOR VISUAL AND STRUCTURAL REASONS. IT IS NOT WITHIN THE SCOPE OF THE DRAWINGS TO SHOW ALL NECESSARY OFFSETS, BENDS, PULL BOXES, AND OBSTRUCTIONS. THE DRAWINGS ARE NOT INTENDED TO BE SCALED, REFER TO THE ARCHITECTURAL DRAWINGS FOR DIMENSIONS. IN CASE OF DISCREPANCY BETWEEN ELECTRICAL AND ARCHITECT SHEET SET FOR MOUNTING ELEVATIONS OR REFLECTED CEILINGS, FOLLOW ARCHITECT SHEETS.
10. MAINTAIN ON THE JOB SITE, IN GOOD CONDITION, ONE SET OF UP-TO-DATE ELECTRICAL DRAWINGS. PROGRESSIVELY, NEATLY, LEGIBLY, AND EXACTLY RECORD ON THESE DRAWINGS THE LOCATION OF ALL CONCEALED CONDUIT RUNS AND ALL WORK WHICH IS INSTALLED DIFFERENTLY THAN IN THE LOCATION AND MANNER INDICATED ON THE DRAWINGS. ON COMPLETION OF THE WORK, THE DRAWINGS SHALL BE TURNED OVER TO THE ARCHITECT FOR APPROVAL AND POSSESSION AS A PERMANENT AND COMPLETE RECORD DOCUMENT OF THE ELECTRICAL WORK.
11. WHEN FOLLOWED BY THE PHRASE "OR EQUAL", SPECIFIC MANUFACTURERS PRODUCTS ARE USED AS AS A BASIS OF DESIGN. ALTERNATE PRODUCT MAY BE PROVIDED IF APPROVED "AS EQUAL" BY THE ENGINEER OF RECORD AND THE AHJ.
12. FOR ALL ELECTRICAL & COMMUNICATIONS DEVICES AND CIRCUITS, CONTRACTOR SHALL FIELD VERIFY WITH OWNER AND COORDINATE WITH ALL OTHER TRADES FINAL LOCATION(S) PRIOR TO ROUGHT IN.
13. PRIOR TO FINAL ACCEPTANCE, CLEAN ALL SWITCHES, CABINETS, DEVICE PLATES, FIXTURES, AND OTHER ITEMS FURNISHED UNDER THIS CONTRACT,AND ENSURE THAT ALL PANELBOARD DIRECTORIES ARE IN PLACE AND COMPLETED OR REVISED AS REQUIRED BY THE WORK, AND THAT ALL MARKING AND IDENTIFICATION OF ALL EQUIPMENT, JUNCTION BOXES, AND OTHER ITEMS IS COMPLETED. REPAIR OR REPLACE, AS DIRECTED BY THE OWNER, ANY ITEMS DAMAGED DUE TO INSTALLATION OR RELOCATION OF EQUIPMENT OR DEVICES AT NO ADDITIONAL COST TO THE OWNER.
14. UPON THE COMPLETION OF THE WORK, THE ENTIRE ELECTRICAL SYSTEM SHALL BE TESTED AND SHALL BE SHOWN TO BE IN PROPER WORKING CONDITION IN ACCORDANCE WITH THE INTENT OF THE SPECIFICATIONS AND DRAWINGS. IT SHALL BE THE RESPONSIBILITY OF THE CONTRACTOR TO HAVE ALL SYSTEMS READY FOR OPERATION AND TO HAVE AN ELECTRICIAN AVAILABLE TO OPERATE SAME IN ACCORDANCE WITH OR UNDER THE SUPERVISION OF THE ARCHITECT/ENGINEER AND OR AHJ.
THE CONTRACTOR SHALL BE AVAILABLE TO ASSIST IN REMOVAL OF PANEL FRONTS. ECT. TO PERMIT INSPECTION AS REQUIRED.
15. ALL WORK SHALL MEET OR EXCEED THE REQUIREMENTS OF THE FLORIDA BUILDING CODE, NATIONAL ELECTRIC CODE (NFPA 70), LOCAL ORDINANCES AND THE AUTHORITY HAVING JURISDICTION.
16. FLEXIBLE CONDUIT INSTALLED OUT OF DOORS, IN ANY MECHANICAL EQUIPMENT ROOM, OR IN NORMALLY WET AREAS SHALL BE LIQUID TIGHT FLEX WITH SUITABLE FITTINGS.
17. COORDINATE WITH ALL MECHANICAL TRADES FOR SPACE REQUIREMENTS IN MECHANICAL ROOMS, CORRIDORS, SHAFTS, ABOVE CEILING, ETC. THIS INCLUDES SPACE ABOVE PANELS WHERE DUCTS AND PIPING ARE PROHIBITED.
18. FOR EXACT LOCATIONS OF MECHANICAL EQUIPMENT, SEE MECHANICAL PLANS.
19. PROVIDE CONDUIT EXPANSION FITTINGS WITH BONDING JUMPERS FAR ALL CONDUITS PASSING THROUGH EXPANSION JOINTS.
20. SEE ARCHITECTURAL REFLECTED CEILING PLANS FOR EXACT LOCATION OF ALL CEILING MOUNTED EQUIPMENT.
21. ALL RECEPTACLES BESIDE SINKS SHALL BE LOCATED AT LEAST 6" HORIZONTALLY FROM THE TOWEL DISPENSER. UNDER NO CONDITION SHALL A RECEPTACLE BE LOCATED UNDER A TOWEL DISPENSER.
22. CONTRACTOR SHALL VERIFY AND COORDINATE ALL MOUNTING HEIGHTS OF ALL DEVICES MOUNTED IN CASEWORK OR IN OR ABOVE COUNTERS WITH EXISTING EQUIPMENT AND EQUIPMENT FURNISHED.

SUBMITTAL/ SHOP DRAWING DATA

PROVIDE 6-SETS (EACH) OF MANUFACTURER'S DATA, O&M MANUALS, ELECTRICAL DATA, DIMENSIONAL DATA AND CLEARANCES, CONNECTION DATA, COLOR SAMPLES (IF REQUIRED), AND TEST DATA FOR THE FOLLOWING:

LIGHTING FIXTURES, PANELS, SWITCHBOARDS, TRANSFORMERS, GENERATORS, UPS,

SHOP DRAWINGS MUST BE SUBMITTED AND APPROVED PRIOR TO ORDERING OF EQUIPMENT. ENGINEER WILL REQUIRE 7 WORKING DAYS TO REVIEW DRAWINGS. ANY ITEM FURNISHED AND/OR INSTALLED WITHOUT THE BENEFIT OF REVIEW AND ACCEPTANCE FOUND TO BE DEFICIENT SHALL BE SUBJECT TO REPLACEMENT AT THE DIRECTION OF THE ENGINEER AND AT THE CONTRACTOR'S SOLE EXPENSE. ENGINEER WILL REQUIRE DETAILED, COMPLETED SUBMITTALS. IF ENGINEER IS REQUIRED TO REVIEW SUBMITTAL DATA MORE THAN TWICE, THAN THE CONTRACTOR WILL BE CHARGED $125 PER HOUR FOR ADDITIONAL ENGINEERING TIME TO RELEASE SUBMITTALS.

ABBREVIATIONS

A	AMPERE
AF	AMPERE FRAME
AFC	AVAILABLE FAULT CURRENT
AFCI	ARC FAULT CIRCUIT INTERRUPTER
AFF	ABOVE FINISHED FLOOR
AFG	ABOVE FINISHED GRADE
AHU	AIR HANDLER UNIT (HVAC)
AHJ	AUTHORITY HAVING JURISDICTION
AIC	AMPERE INTERRUPTING CAPACITY
AT	AMPERE TRIP
AWG	AMERICAN WIRE GAUGE
BKR	BREAKER
C	CONDUIT OR CONDUCTOR
CB	CIRCUIT BREAKER
CLG	CEILING
CO	CONDUIT ONLY
CPT	CONTROL POWER TRANSFORMER
CU	CONDENSING UNIT (HVAC), COPPER
DS	DISCONNECT (SAFETY) SWITCH
EC	EMPTY CONDUIT
EF	EXHAUST FAN
EL	EMERGENCY LIGHT (UNSWITCHED)
ELE	ELECTRICAL, ELECTRIC
EM	EMERGENCY
EMT	ELECTRICAL METALLIC TUBING
ENT	ELECTRICAL NONMETALLIC TUBING
EWH	ELECTRIC WATER HEATER
EX	EXISTING
FBC	FLORIDA BUILDING CODE
FDS	FUSED DISCONNECT (SAFETY) SWITCH
FLOUR	FLOURESCENT
FMC	FLEXIBLE METAL CONDUIT
FMT	FLEXIBLE METAL TUBING
GND	GROUND (ELECTRICAL)
GEN	GENERATOR
GFI	GROUND FAULT INTERRUPTER
GWH	GAS WATER HEATER
HH	HAND HOLE
HID	HIGH INTENSITY DISCHARGE LIGHT
HP	HORSE POWER
HPS	HIGH PRESSURE SODIUM LIGHT
HZ	HERTZ (ELECTRICAL)
ICAN	ICANDESCENT LIGHT
ICCB	INSOLATED CASE CIRCUIT BREAKER
IGND	ISOLATED GROUND
IMC	INTERMEDIATE METAL CONDUIT
JB	JUNCTION BOX
KCMIL	THOUSAND CIRCULAR MILS
KVA	KILOVOLT-AMPERE
KW	KILOWATT
KWH	KILOWATT-HOUR
LTG	LIGHT, LIGHTING
LFMC	LIQUIDTIGHT FLEXIBLE METAL CONDUIT
LFNC	LIQUIDTIGHT FLEXIBLE NONMETALLIC CONDUIT
MCB	MAIN CIRCUIT BREAKER
MCC	MOTOR CONTROL CENTER
MCCB	MOLDED CASE CIRCUIT BREAKER
MDP	MAIN DISTRIBUTION PANEL
MH	METAL HALIDE LIGHT, MAN HOLE
MLO	MAIN LUGS ONLY
N, NEUT	NEUTRAL (ELECTRICAL)
NEC	NATIONAL ELECTRICAL CODE)
NEMA	NATIONAL ELECTRICAL MANUFACTURERS ASSN.
NFPA	NATIONAL FIRE PROTECTION ASSOCIATION
NL	NIGHT LIGHT (UNSWITCHED)
P	POLE
PB	PULL BOX
PCB	POWER CIRCUIT BREAKER
PH	PHASE (ELECTRICAL)
PNL	PANEL
PNLB	PANELBOARD
PVC	PLASTIC CONDUIT
PWR	POWER (ELECTRICAL)
RCPT	RECEPTACLE
RMC	RIGID METAL CONDUIT
RNC	RIGID NONMETALLIC CONDUIT
RTU	ROOF TOP UNIT (HVAC)
SD	SMOKE DETECTOR
SF	SUPPLY FAN
SH	SHIELDED
SW	SWITCH
SWBD	SWITCBOARD
TEL	TELEPHONE
TTB	TELEPHONE TERMINAL BOARD
UG	UNDERGROUND
UL	UNDERWRITERS LABORATORY
UPS	UNINTERRUPTABLE POWER SUPPLY
UON	UNLESS OTHERWISE NOTED
V, VAC	VOLT, VOLT AC
W	WATT
WP	WEATHERPROOF
XFMR	POWER TRANSFORMER

NOT ALL ABBREVIATIONS ARE USED IN EVERY DESIGN

CODE DISCLAIMER

ELECTRICAL DESIGN IN ACCORDANCE WITH 2017 NATIONAL ELECTRICAL CODE (NFPA-70), AS INCORPORATED BY THE 2020 SEVENTH EDITION FLORIDA BUILDING CODE AND 2020 THE FLORIDA FIRE PREVENTION CODE.

VOLTAGE DROP

THIS PROJECT IS COMPLIANCE WITH FBC ENERGY CONSERVATION 2020 SEVENTH C405.6.3. AND NEC 210.19. FEEDER CONDUCTORS ARE SIZED FOR A MAXIMUM VOLTAGE DROP OF 2 PERCENTAGE AT DESIGN LOAD. BRACH CIRCUIT CONDUCTORS ARE SIZED FOR MAXIMUM VOLTAGE DROP OF 3 PERCENTAGE AT DESIGN LOAD.

RENOVATION/DEMOLITION LEGEND

SYMBOL:	DESCRIPTION:
<E>	EXISTING TO REMAIN.
	EXISTING TO BE REMOVED.
<R>	EXISTING TO BE RELOCATED.

CONDUIT RACEWAY & WIRING LEGEND

SYMBOL:	DESCRIPTION:
	RACEWAY CONDUIT CONCELAED ABOVE CEILING OR WITHIN WALL UNLESS OTHERWISE NOTED. EACH CIRCUIT SHALL CONSIST OF PHASE, NEUTRAL AND GROUND CONDUCTORS. FOR LIGHTING CIRCUITS PROVIDE REQUIRED SWITCH LEGS TO ACHIEVE SWITCHING INDICATED ON PLANS. CONTRACTOR MAY COMBINE CIRCUITS INTO A COMMON HOMERUN CONSISTING OF A MAXIMUM OF A COMMON NEUTRAL/GROUND AND (3) PHASE CONDUCTORS (A, B AND C PHASE). HOWEVER, A SEPARATE NEUTRAL SHALL BE PROVIDED FOR ALL CIRCUITS SERVING COMPUTERS (DATA) CIRCUITS. SERVICING DATA IS DEFINED AS ANY RECEPTACLE NEXT TO A DATA OUTLET OR SPECIFICALLY SERVING A DATA PIECE OF EQUIPMENT.
A-1:3	HOME RUN TO PANEL ALL HOMERUNS SHALL BE #10 AWG, 3/4"C., MINIMUM. WIRING HOME RUN: LETTER INDICATES PANEL; NUMBER IS BRANCH CIRCUIT(S)

LIGHTING PLAN LEGEND

SYMBOL:	DESCRIPTION:
A A-11	FLUORESCENT FIXTURE. UPPER CASE LETTER DENOTES FIXTURE TYPE. REFER TO 'LIGHTING FIXTURE SCHEDULE' FOR FIXTURE SPECIFICATIONS AND MOUNTING. CIRCUIT CONDUIT OR SIDE NUMBERING DESIGNATES WHICH PANEL BOARD/CIRCUIT FIXTURES ARE CONNECTED TO. (TYPICAL FOR ALL LIGHTING FIXTURES)
	2X2 LED FIXTURE
	CEILING MOUNTED DOWNLIGHT FIXTURE (UON IN LIGHT FIXTURE SCHEDULE)
	EXIT LIGHT, UNIVERSAL MOUNT AS SPECIFIED IN THE FIXTURE SCHEDULE. ARROW(S) INDICATE DIRECTION OF TRAVEL. VERIFY WITH ARCHITECTURAL FOR OPTIMUM MOUNTING LOCATION AND SINGLE OR DUAL FACE. CONNECT FIXTURE TO SAME CIRCUIT AS NORMAL LIGHTING CIRCUIT IN THAT ROOM AHEAD OF ANY CONTROL DEVICE. DOUBLE ARROW INDICATES NON DIRECTIONAL SIGN TYPICALLY PLACED OVER DOORS.
	2' LED LINEAR LIGHT
	SUSPENDED PENDANT FIXTURE (UON IN LIGHT FIXTURE SCHEDULE)
	FIXED TRACK LIGHT
	EMERGENCY WALL PACK LIGHT
	1X4 LED FIXTURE
$	WALL SWITCH, SINGLE POLE, 120/277VAC, 20A, MOUNT 48" AFF UON.
$OS	OCCUPANCY SENSOR DUAL TECHNOLOGY PIR/MICROPHONICS MANUFACTURER - SENSOR SWITCH, MODEL - WSD-PDT (800W)

ELECTRICAL SHEET INDEX

SR. NO.	DRAWING NO.	SHEET NAME	SCALE
1	E-01	GENERAL NOTES, ABBREVIATIONS & LEGEND	NO SCALE
2	E-02	ELECTRICAL SPECIFICATIONS	NO SCALE
3	E-03	SITE PLAN	1/4" = 1'-0"
4	E-04	UNIT A1 & A2 FLOOR PLAN - ELECTRICAL	1/4" = 1'-0"
5	E-05	DETAILS - ELECTRICAL	NO SCALE
6	E-06	SCHEDULES - ELECTRICAL	NO SCALE

POWER PLAN LEGEND

SYMBOL:	DESCRIPTION:
	DUPLEX RECEPTACLE, NEMA 5-20R, MOUNT 18" AFF UON.
	DUPLEX RECEPTACLE, NEMA 5-20R, MOUNT 42" AFF OR ABOVE COUNTER.
	DUPLEX RECEPTACLE, NEMA 5-20R, SPLIT WIRE, MOUNT 42" AFF UON.
	DUPLEX RECEPTACLE, NEMA 5-20R, FLUSH CEILING MOUNT UON.
	QUAD RECEPTACLE, 2 OF NEMA 5-20R, MOUNT 18" AFF UON.
	QUAD RECEPTACLE, 2 OF NEMA 5-20R, MOUNT 42" AFF OR ABOVE COUNTER.
	SPECIAL PURPOSE OUTLET, NEMA CONFIGURATION AS SHOWN.
IG	INDICATED ISOLATED GROUND ON ANY RECEPTACLE
GFI	DUPLEX RECEPTACLE, NEMA 5-20R, MOUNT 18" AFF UON (GROUND FAULT CIRCUIT INTERRUPTED)
GFI	DUPLEX RECEPTACLE, NEMA 5-20R, MOUNT 42" AFF OR ABOVE COUNTER (GROUND FAULT CIRCUIT INTERRUPTED)
	JUNCTION BOX WITH BLANK PLATE; BRACKET INDICATES WALL MOUNTED.
	PANELBOARD (RECESSED FLUSH-MOUNTED UON).
	ELECTRICAL MAIN DISTRIBUTION PANELBOARD OR SWITCHBOARD
	COMMUNICATIONS OUTLET BOX FOR OWNER FURNISHED VOICE AND/OR DATA. STUB 1" C. TO CEILING CAVITY AND TERMINATE WITH PLASTIC BUSHINGS. C=MOUNTED 6" ABOVE COUNTER OR BACKSPLASH, W=WALL MOUNTED AT +54" AFF.
TV	CABLE TV OUTLET BOX FOR OWNER FURNISHED CABLE TV SYSTEM. STUB 3/4" C. TO CEILING CAVITY AND TERMINATE WITH PLASTIC BUSHINGS.
S	SPEAKER
	3/4" PLYWOOD TELEPHONE BACKBOARD.
	FLOORBOX-3 GANG/3 COMPARTMENT, 1 GANG FOR POWER AND 2 GANGS FOR COMMUNICATIONS: WALKER/WIREMOLD RFB4-4DB WITH RAKMII COVER PLATE (VERIFY FLOOR COVERING AND DESIRED COVER PLATE PRIOR TO ORDERING). COORDINATE REQUIRED COMMUNICATIONS BRACKETS WITH OWNER AND PROVIDE THOSE DESIRED BRACKETS. PROVIDE (1) 1"C. AS A MINIMUM TO NEAREST WALL AND ROUTE CONDUIT UP WALL TO ACCESSIBLE CEILING CAVITY FOR EVERY FLOORBOX SHOWING COMMUNICATION OUTLETS. ACCEPTABLE SUBSTITUTIONS BY HUBBELL.
CB	FLOORBOXES MAY BE STAMPED STEEL IF NOT IN DIRECT CONTACT WITH THE EARTH. PROVIDE LAYER OF CONCRETE IF REQUIRED. OTHERWISE, IF IN DIRECT CONTACT WITH EARTH, PROVIDE CAST IRON FLOORBOXES.
F	ELECTRICAL FAN
SD	SMOKE DETECTOR (NOT PART OF FIRE ALARM SYSTEM)
CM	COMBINATION SMOKE & CARBON MONOXIDE DETECTOR (NOT PART OF FIRE ALARM SYSTEM)
X/X	FUSED SAFETY (DISCONNECT) SWITCH TOP NUMBER = FUSE RATING, BOTTOM NUMBER = DISCONNECT RATING USE ALL RK-1 FUSES.
X X/X	SAFETY (DISCONNECT) SWITCH, NON-FUSED FRONT NUMBER = NUMBER OF POLE, TOP NUMBER = DISCONNECT RATING, BOTTOM NUMBER = BARKER RATING
CB	ENCLOSED CIRCUIT BREAKER IN NEMA 1 ENCLOSURE, U.N.O.
M	METER SOCKET, PROVIDE PER UTILITY COMPANY REQUIREMENTS.
TC	TIME CLOCK
XFR KVA	TRANSFORMER (NON-UTILITY) NUMBER INDICATES KVA, EX: 45=45KVA
	TRANSFORMER (UTILITY)
STRIKE	DOOR OR WINDOW STRIKE
CARD	CARD READER
KEY	SECURITY KEYPAD
	SECURITY CAMERA
MD	MOTION DETECTOR

RELATED TO SECURITY DEVICES

NOT ALL SYMBOLS ARE USED IN EVERY DESIGN

PLAN REVISION DATES:

LES
LEVEL ELEVEN STUDIO INC.
220 SANDLEWOOD TRL
WINTER PARK, FL 32789
407.519.9157

Narcoossee Reserve - SDP 20-0025
Townhomes
Thompkins Dr, Osceola County, FL 34771

CONSTRUCTION SHALL BE PER INDICATED DIMENSIONS AND NOTES ONLY, ANY DISCREPENCIES TO BE REPORTED TO ARCHITECT FOR CLARIFICATION!

NOT FOR CONSTRUCTION

HACKENBERG ENGINEERING
Hackenberg Engineering
PO Box 1886
Winter Park, FL 32790
FBPE Lic: CA 31660

E-01

DIVISION 26 - ELECTRICAL SPECIFICATIONS

GENERAL ELECTRICAL REQUIREMENTS

A. THE COMPLETE ELECTRICAL INSTALLATION SHALL COMPLY WITH THE LATEST ADOPTED EDITION OF THE FOLLOWING CODES & STANDARDS:
   1. NFPA 13 STANDARD FOR THE INSTALLATION OF SPRINKLER SYSTEMS.
   2. NFPA 20 STANDARD FOR THE INSTALLATION OF CENTRIFUGAL FIRE PUMPS.
   3. NFPA 37 STANDARD FOR THE INSTALLATION AND USE OF STATIONARY COMBUSTION ENGINES AND GAS TURBINES.
   4. NFPA 70 NATIONAL ELECTRICAL CODE 2017 ED.
   5. NFPA 72 NATIONAL FIRE ALARM CODE.
   6. NFPA 780 LIGHTNING PROTECTION CODE.
   7. NFPA 90A STANDARD TO THE INSTALLATION OF AIR CONDITIONING AND VENTILATING SYSTEMS.
   8. NFPA 96 STANDARD FOR VENTILATION CONTROL AND FIRE PREVENTION OF COMMERCIAL COOKING OPERATIONS.
   9. NFPA 101 LIFE SAFETY CODE.
   10. NFPA 110 STANDARD FOR EMERGENCY AND STANDBY POWER SYSTEMS.
   11. ANSI A17.1 ELEVATOR CODE.
   12. ANSI A117.1 ACCESSIBILITY CODE.
   13. FLORIDA AMERICANS WITH DISABILITIES ACCESSIBILITY IMPLEMENTATION ACT AS DESCRIBED IN ACCESSIBILITY REQUIREMENTS MANUAL, DEPARTMENT OF COMMUNITY AFFAIRS.
   14. AMERICANS WITH DISABILITIES ACT.
   15. FLORIDA BUILDING CODE 2020 7th EDITION.
   16. FLORIDA FIRE PREVENTION CODE 2020 Ed.

B. 'FURNISH AND INSTALL' AND 'PROVIDE' ARE EQUIVALENT TERMS WHICH INDICATE MATERIAL AND/OR EQUIPMENT SUPPLIED AND INSTALLED BY THIS CONTRACTOR. 'FURNISHED' DENOTES MATERIAL OR EQUIPMENT SUPPLIED BUT NOT INSTALLED BY THIS CONTRACTOR. 'INSTALLED' DENOTES THE SETTING IN POSITION OR CONNECTION OF MATERIAL OR EQUIPMENT BY THIS CONTRACTOR BUT SUPPLIED BY OTHERS.

C. IT IS THE REQUIREMENT OF THESE CONTRACT DOCUMENTS TO HAVE THE CONTRACTOR PROVIDE SYSTEMS AND COMPONENTS THAT ARE FULLY COMPLETE AND OPERATIONAL AND FULLY SUITABLE FOR THE INTENDED USE.

D. DRAWINGS ARE DIAGRAMMATIC AND SHOULD NOT BE SCALED TO DETERMINE EXACT LOCATIONS. VERIFY ALL LOCATIONS A REQUIREMENTS OF EQUIPMENT FURNISHED AND/OR INSTALLED BY OTHERS BEFORE ROUGHING IN.

E. ELECTRICAL SYSTEMS SHALL BE INSTALLED AS A COMPLETE INSTALLATION. INCIDENTAL DETAILS NOT USUALLY SHOWN OR SPECIFIED, BUT NECESSARY FOR PROPER INSTALLATION AND OPERATION SHALL BE INCLUDED IN THE WORK OF THIS CONTRACTOR.

F. PRE-BID SURVEY.
   1. THIS CONTRACTOR SHALL SURVEY THE JOBSITE PRIOR TO SUBMITTING THEIR BID TO DETERMINE THE FOLLOWING:
      1.1. AREAS REQUIRING DEMOLITION, TEMPORARY POWER, RELOCATING, ETC. WHICH ARE INADVERTENTLY NOT SHOWN ON THE DRAWINGS.
      1.2. PROBLEMS WITH WORK SEQUENCE.
   2. ANY UNUSUAL CONDITIONS NOT SHOWN ON THE DRAWINGS SHALL BE REPORTED TO THE ENGINEER PRIOR TO BIDDING.

G. ACCEPTABLE MANUFACTURERS: THE LISTING OF A MANUFACTURER AS ''ACCEPTABLE'' UNDER ANY DIVISION 26 REQUIREMENTS DOES NOT IMPLY AUTOMATIC APPROVAL. IT IS THE SOLE RESPONSIBILITY OF THE CONTRACTOR TO ENSURE THAT ANY SUBMITTALS MADE ARE FOR PRODUCTS THAT MEET OR EXCEED THE SPECIFICATIONS INCLUDED HERE.

H. UPON COMPLETION OF THE WORK, BUT BEFORE FINAL ACCEPTANCE OF THE SYSTEM AND REQUEST FOR FINAL PAYMENT, FURNISH THE OWNER, FOR APPROVAL, OPERATION AND MAINTENANCE MANUALS IN LOOSE-LEAF BINDERS. PROVIDE A MINIMUM OF 6 SETS. MANUAL SHALL INCLUDE:
   1. SUBMITTAL DATA STATING EQUIPMENT RATING AND SELECTED OPTIONS FOR EACH PIECE OF EQUIPMENT REQUIRING MAINTENANCE.
   2. OPERATION MANUALS AND MAINTENANCE MANUALS FOR EACH PIECE OF EQUIPMENT REQUIRING MAINTENANCE. REQUIRED ROUTINE MAINTENANCE ACTIONS SHALL BE CLEARLY IDENTIFIED.
   3. NAMES AND ADDRESSES OF AT LEAST ONE QUALIFIED SERVICE AGENCY.

I. PROVIDE OWNER WITH A RECORD SET OF AS-BUILT DRAWINGS WITHIN 30 DAYS AFTER THE DATE OF SYSTEM ACCEPTANCE FROM A DESIGNATED MARKED-UP SET OF BLUE LINES INCLUDING:
   1. A SINGLE-LINE DIAGRAM OF THE BUILDING ELECTRICAL DISTRIBUTION SYSTEM AND
   2. FLOOR PLANS INDICATING LOCATION AND AREA SERVED FOR ALL DISTRIBUTION.

J. PROVIDE TEMPORARY ELECTRICAL POWER TO JOBSITE FOR THE DURATION OF THE PROJECT.

K. SUBMIT SHOP DRAWINGS TO ARCHITECT FOR ALL ELECTRICAL ITEMS. THE SHOP DRAWINGS SHALL BE SUBMITTED COMPLETE FOR ALL ELECTRICAL ITEMS. INCOMPLETE SUBMITTALS WILL BE RETURNED WITHOUT BEING REVIEWED OR THE CONTRACTOR SHALL AGREE TO PAY THE ELECTRICAL ENGINEER DIRECTLY AT AN HOURLY RATE OF $125.00 TO REVIEW SUBSEQUENT SUBMITTALS. SHOP DRAWING RE-SUBMITTALS DUE TO REJECTIONS FOR NOT SUBMITTING THE SPECIFIED ITEMS ARE ALSO SUBJECT TO THE HOURLY REVIEW FEE.

L. PROVIDE 4'' HIGH CONCRETE HOUSEKEEPING PADS FOR ALL FLOOR MOUNTED ELECTRICAL EQUIPMENT (SWITCHBOARDS, TRANSFORMERS, ETC.).

M. DIVISION 26 SUB-CONTRACTOR SHALL REVIEW DIVISION 15 SHOP DRAWINGS AND VERIFY EQUIPMENT VOLTAGE, PHASEAND AMPS PRIOR TO ROUGH-IN OF ALL EQUIPMENT.

N. ALL EQUIPMENT, DEVICES, ETC. FURNISHED BY ELECTRICAL CONTRACTOR SHALL BE U.L. LISTED (OR EQUIVALENT NATIONAL TESTING AGENCY) FOR IT'S INTENDED PURPOSE. INFORM OWNER THAT ALL OWNER FURNISHED EQUIPMENT, DEVICES, ETC. MUST ALSO HAVE A U.L. LISTING (OR EQUIVALENT LISTING).

O. ALL ELECTRICAL COMPONENTS (CONDUIT, WIRE, FITTINGS, SUPPORTS, CIRCUIT BREAKERS,LAMPS, ETC.) PROVIDED AND INSTALLED IN THIS PROJECT SHALL BE BRAND NEW. RE-USE OF EXISTING COMPONENTS WILL NOT BE APPROVED.

P. UTILITY COORDINATION: CONTRACTOR SHALL SUBMIT COMPLETE SET OF CONSTRUCTION DOCUMENTS TO UTILITY COMPANY IMMEDIATELY AFTER RECEIVING NOTICE TO PROCEED OR PRIOR TO ANY SITE OR BUILDING ROUGH-IN.COORDINATE EASEMENT LOCATIONS BETWEEN OWNER AND UTILITY COMPANY. VERIFY WITH UTILITY COMPANY: PROPOSED VOLTAGE, PHASE, POLE/ PAD-MOUNT TRANSFORMER LOCATIONS, METERING, UTILITY PRIMARY ROUTING AND CONDUIT REQUIREMENTS, ETC.

ELECTRICAL IDENTIFICATION

A. PROVIDE CABLE/CONDUCTOR IDENTIFICATION BANDS.

B. PROVIDE ENGRAVED PLASTIC LAMINATE SIGNS, WHITE LETTERING ON A BLACK BACKGROUND, FOR EACH UNIT OF THE FOLLOWING CATEGORIES OF ELECTRICAL WORK: SWITCHBOARDS, MOTOR STARTERS, TRANSFORMERS, PANELBOARDS, DISCONNECTS, AND JUNCTION BOXES. NAME PLATES SHALL IDENTIFY PANEL DESIGNATION (NAME), VOLTAGE, PHASE AND WIRE CONFIGURATION.

C. UNDERGROUND CABLE/CONDUIT IDENTIFICATION PLASTIC LINE MARKERS SHALL BE PROVIDED THE CONTINUOUS TRENCH LENGTH.

ELECTRICAL DEMOLITION AND ALTERATIONS

A. ANY EXISTING CIRCUITS OR EQUIPMENT NOT SHOWN ON DRAWINGS AND WHICH ARE LOGICALLY EXPECTED TO BE CONTINUED IN SERVICE SHALL BE RECONNECTED IN AN APPROVED MANNER.

B. WIRING TO ELECTRICAL EQUIPMENT BEING DISCONNECTED SHALL BE REMOVED BACK TO THEIR OVER-CURRENT DEVICE OR BACK TO NEAREST ACTIVE JUNCTION BOX.

C. CONTRACTOR SHALL PROVIDE SUPPORT FOR EXISTING CONDUIT IN REMODELED AREA THAT IS TO REMAIN AND IS NOT PROPERLY SUPPORTED IN ACCORDANCE WITH N.E.C. REQUIREMENTS.

D. EXCEPT FOR CONDUIT, CONDUCTORS AND MISCELLANEOUS HARDWARE, ALL ELECTRICAL EQUIPMENT SHALL REMAIN THE PROPERTY OF THE OWNER AND SHALL BE STORED OR DISPOSED OF AS DIRECTED BY OWNER.

CONDUIT & RACEWAYS

A. MINIMUM SIZE CONDUIT SHALL BE 1/2''. DOES NOT APPLY TO MC CABLE.

B. CONDUIT SHALL BE MC CABLE, ELECTRICAL METALLIC TUBING, OR RIGID GALVANIZED STEEL CONDUIT. SCHEDULE 40 PVC CONDUIT IS ALLOWED FOR CONDUITS IN/UNDER THE SLAB AND UNDERGROUND. MC CABLE MAY NOT BE USED FOR ANY HOMERUN.

C. ALL CONDUIT SHALL BE CONCEALED. CONDUIT SHALL BE EMT IN INTERIOR AREAS, AND RIGID GALVANIZED STEEL CONDUIT IN EXTERIOR AREAS.

D. COORDINATE ROUTING (LOCATION) OF CONDUIT WITH HVAC DUCTWORK, PLUMBING PIPING AND SPRINKLER PIPING.

E. SECURE CONDUIT IN PLACE WITH CORROSION-PROOF ALLOY STRAPS AT SPACING AS REQUIRED BY N.E.C. CONDUIT SHALL BE SECURED TO BUILDING STRUCTURE.

F. INSTALL FLEXIBLE STEEL CONDUIT NOT OVER 3' LONG TO MOTORS, TRANSFORMERS AND EQUIPMENT SUBJECT TO VIBRATION.

G. INSTALL LIQUID-TIGHT FLEXIBLE CONDUIT NOT OVER 3' LONG WHERE SUBJECT TO MOISTURE, DIRT OR FUMES.

H. TYPE MC CABLE SHALL BE OF THE INTERLOCKING JACKET TYPE. CABLE SHALL BE SUPPORTED AT NOT MORE THAN SIX-FOOT INTERVALS, AND ALL FITTINGS SHALL BE IDENTIFIED FOR USE WITH SAID CABLE. MC CABLE SHALL NOT BE USED FOR SERVICE ENTRANCE OR IN EXPOSED AREAS. MC CABLE MAY BE USED ABOVE DROP CEILINGS AND IN INTERIOR PARTITIONS.

I. CONTRACTOR SHALL MINIMIZE FLOOR SLAB PENETRATIONS.

J. ALL CONDUIT RUNS SHALL BE DESIGNED TO PRESENT A NEAT AND ORDERLY APPEARANCE,RUNNING LINES PARALLEL WITH BUILDING STRUCTURE OR WALLS.

K. ROOFTOP UNITS AND EXHAUST FANS ARE TO BE WIRED THROUGH THE ROOF CURBS OR UTILIZE FACTORY-FABRICATED ROOF PIPING CURBS. PITCH POCKETS ARE NOT ALLOWED.

L. ROMEX CABLE IS NOT PERMITTED.

M. CONDUIT SHALL BE ROUTED PERPENDICULAR THROUGH RATED WALLS. PROVIDE PROPER SLEEVES AND FIRE SAFING/SEALANTS.

N. PROVIDE UL APPROVED FIRE SEALS FOR ALL FIRE RATED WALL AND FLOOR PENETRATIONS.

CONDUIT FITTINGS

A. COMPRESSION TYPE STEEL OR STEEL SETSCREW TYPE SHALL BE UTILIZED.

B. PROVIDE PROPER EXPANSION FITTINGS WHEN CROSSING BUILDING EXPANSION LINES.

WIRES, CABLES AND CONNECTORS

A. ALL CONDUCTORS SHALL BE COPPER WITH 600V 90°C WITH THHN/THWN-2 INSULATION FOR USE WITHIN BUILDING CONFINES. WHERE INSTALLED BEYOND THE BUILDING CONFINES, SUCH AS IN UNDERGROUND FEEDER BANKS OR CIRCUITRY TO SITE LUMINAITES IT SHALL BE COPPER WITH 600V, 75°, XHHW-2 INSULATION.

B. USE SOLID CONDUCTOR, SINGLE CONDUCTOR, NO. 12 AWG MINIMUM FOR GENERAL USE WIRING.

C. USE STRANDED CONDUCTOR, SINGLE CONDUCTOR NO. 12 AWG AND LARGER, FOR MOTORS AND OTHER INSTALLATIONS WHERE VIBRATION IS GENERATED.

D. COLOR-CODING SHALL IDENTIFY THE SAME PHASE THROUGHOUT THE SYSTEM, FROM SERVICE SWITCH OR TRANSFORMER THROUGH ALL BRANCH CIRCUITRY. ALL WIRING SHALL BE COLOR-CODED AS FOLLOWS:

240/208/120 VOLT	480/277 VOLT
PHASE A-BLACK	PHASE A-BROWN
PHASE B-RED	PHASE B-ORANGE
PHASE C-BLUE	PHASE C-YELLOW
NEUTRAL-WHITE	NEUTRAL-WHITE TRACER OR GRAY

E. A STANDARD 500V MEGGER INSULATION TEST SHALL BE MADE AND RECORDED FOR ALL FEEDER CIRCUITS. PROVIDE A COPY OF TEST RESULTS TO ENGINEER FOR REVIEW.

F. PROVIDE LUGS FOR FEEDER SIZES INDICATED ON DRAWINGS OR AS REQUIRED.

G. WIRE SIZE FOR 120V BRANCH CIRCUITS SHALL BE PER THE FOLLOWING LENGTH OF RUNS:
   1. 0 TO 50 FT: RUN FROM PANELBOARD TO FIRST OUTLET; NO.12 AWG MINIMUM.
   2. 51 TO 200 FT RUN: INCREASE ONE WIRE SIZE, I.E. NO.12 AWG BECOMES NO.10 AWG TO FIRST OUTLET.
   3. 201 TO 325 FT RUN: INCREASE TWO WIRE SIZES, I.E. NO.12 AWG BECOMES NO.8 AWG TO FIRST OUTLET.
   4. 326 AND ABOVE: WIRING SHALL BE SIZED FOR 3% MAXIMUM VOLTAGE DROP.

BOXES

A. WALL OUTLET BOXES SHALL BE 4 INCH SQUARE WITH A TOTAL DEPTH OF LESS THAN 2-1/2'' GALVANIZED PRESSED STEEL WITH PLASTER RINGS OR GANG COVER, OR SIZED AS REQUIRED.

B. WHERE MORE THAN TWO SWITCHES OR DEVICES ARE LOCATED AT ONE POINT, USE GANGED BOXES AND COVERS.

C. ALL BOXES FOR ELECTRICAL EQUIPMENT SHALL HAVE COVERS.

D. DO NOT INSTALL BOXES BACK TO BACK OR THROUGH WALL. OFFSET OUTLET BOXES ON OPPOSITE SIDES OF WALL A MINIMUM OF 12" OR ON OPPOSITE SIDES OF STUD IN PARTITION WALLS. WHERE BACK TO BACK BOXES CANNOT BE AVOIDED, PROVIDE GYPSUM BOARD BETWEEN BOXES. PROVIDE PUTTY PADS ON ALL BOXES WHERE REQUIRED PER FBC 712.3.2.

E. IF A K.O. IS AVAILABLE IN THE BASE JUNCTION BOX, THEN NO TERMINATIONS ARE ALLOWED IN THE EXTENSION RINGS.

WIRING DEVICES

A. RECEPTACLES SHALL BE HEAVY DUTY DUPLEX, 2 POLE, 3W, GROUNDING, 20A, 125V, DESIGNED FOR SIDE AND BACK WIRING WITH NEMA CONFIGURATION 5-20R.

B. RECEPTACLES NEXT TO DATA OUTLETS SHALL BE TVSS.

C. GROUND FAULT CIRCUIT INTERRUPTER RECEPTACLES SHALL BE NEMA 5-20R OR EQUAL.

D. SWITCHES SHALL BE HEAVY DUTY SINGLE POLE AC QUIET SWITCHES, 20A.

E. PROVIDE SMOOTH NYLON COVERS FOR ALL DEVICES.

F. INCANDESCENT DIMMERS SHALL BE 2000WATTS, 120V. CONTRACTOR SHALL PROVIDE MAGNETIC LV DIMMERS FOR MAGNETIC TRANSFORMERS AND ELECTRONIC LV DIMMERS FOR ELECTRONIC TRANSFORMERS.

PANELBOARDS

A. PROVIDE LIGHTING & APPLIANCE PANELBOARDS, & POWER DISTRIBUTION PANELBOARDS WITH DEAD FRONT COVERS, FULL SIZE NEUTRAL & BOLT-ON HEAVY DUTY, QUICK MAKE, QUICK BREAK CIRCUIT BREAKERS. PANEL BOARDS SHALL BE U.L. LISTED.

B. INSTALL PANELBOARDS SO TOP BREAKER IS NOT HIGHER THAN 6'-0'' ABOVE FLOOR.

C. CONTRACTOR SHALL BALANCE PHASES IN PANELBOARD SO THAT LOAD IMBALANCE DOES NOT EXCEED 10%.

D. PANELBOARD SHALL INCLUDE COMPLETE TYPEWRITTEN DIRECTORY.

E. PROVIDE SPARE CONDUITS TO CEILING CAVITY FOR SPARES/SPACES IN RECESSED PANELBOARDS. PROVIDE (1) 3/4". FOR EVERY 3 SPACES.

F. PROVIDE 120V POWER TO 480V CIRCUIT BREAKER SHUNT-TRIPS FROM NEAREST 120V PANELBOARD.

G. LOAD CENTERS SHALL BE DEAD FRONT, FACTORY ASSEMBLED, FULL-SIZE NEUTRAL AND GROUND BAR. NOTE: IF LOAD CENTERS CANNOT BE FABRICATED TO MEET THE MINIMUM REQUIREMENTS SPECIFIED, PROVIDE LIGHTING & APPLIANCE PANELBOARDS WITH BOLT-ON BREAKERS.

H. NON-LINEAR PANELBOARDS SHALL BE PROVIDED WHERE INDICATED ON PLANS. EQUIP WITH 200% RATED NEUTRAL.

I. PROVIDE U.L. LISTED BREAKERS FOR EXISTING PANELBOARDS TO MATCH MANUFACTURER & AIC RATING.

J. PROVIDE AFCI (ARC FAULT CIRCUIT INTERRUPTER) BREAKERS FOR ALL CIRCUITS SERVING BEDROOMS OF DWELLING UNITS PER N.E.C. 210.12.

K. ALL BREAKERS SERVING MECHANICAL, REFRIGERATION, OR OTHER EQUIPMENT WHERE REQUIRED, SHALL BE HACR RATED.

L. BREAKERS WITH HID LIGHTING LOADS SHALL BE HID RATED.

M. BREAKERS SERVING ELEVATOR SHALL BE SHUNT-TRIP TYPE.

N. BREAKERS SERVING CIRCUITS UNDER KITCHEN HOODS SHALL BE SHUNT-TRIP TYPE.

EMI FILTER

A. ATTENUATION (INSERTION LOSS) IS 100DB @14KHZ TO 10GHZ MEASURED IN ACCORDANCE WITH MIL-STD-220. FILTER INSERTION LOSS WILL EXTEND TO 40 GHZ WHEN INSTALLED WITH PROPER EMI SHIELDING AND ISOLATION.

B. FILTERS CAN BE SUPPLIED WITH VARIOUS LEVELS OF TRANSIENT VOLTAGE PROTECTION (EMP, HEMP, AND HERF.)

C. FILTER CABINETS SUPPLIED WITH TWO SEPARATE REMOVABLE COVERS TO ACCESS INPUT AND OUTPUT TERMINALS. THE OUTPUT COMPARTMENT IS SUPPLIED WITH AN EMI (RF) NON- CORROSIVE, ENVIRONMENTAL GASKET TO PREVENT RF LEAKAGE AND ACCOMMODATE MAXIMUM ISOLATION BETWEEN INPUT AND OUTPUT COMPARTMENTS. THE INPUT COMPARTMENT IS SUPPLIED WITH A MOISTURE RESISTANT GASKET.

D. LCR POWER LINE FILTERS COMPLY WITH ALL THE APPLICABLE REQUIREMENTS OF MIL-PRF-15733 LATEST REVISION, MIL-STD-810 AND UL1283.

E. BLEEDER RESISTORS ARE BUILT INTO EACH FILTER LINE TO DISCHARGE THE CAPACITOR VOLTAGE TO GROUND POTENTIAL DURING POWER SHUTDOWN.

F. DESIGNED TO OPERATE CONTINUOUSLY AT RATED CURRENTS AND VOLTAGES, AND ARE CAPABLE OF WITHSTANDING A 40% CURRENT OVERLOAD FOR 15 MINUTES WITHOUT DEGRADATION.

G. VOLTAGE DROP ACROSS EACH FILTER LINE AT ROOM TEMPERATURE AND FULL RATED CURRENT IS LESS THAN 1%.

H. ELECTRICAL SPECIFICATIONS – 120/208 OR 277/480VAC, 50/60HZ.

I. FINISH: YELLOW ZINC CHROMATE PLATING (CONDUCTIVE) WITH GRAY ENAMEL PAINT, NO PAINT ON REAR MOUNTING SURFACE.

OVER CARPET RACEWAY

A. THE WIRE MOLD CAN BE USED FOR FOUR CHANNELS OF MULTIPLE COMBINATIONS OF POWER, COMMUNICATIONS AND A/V IN ONE SYSTEM.

B. RACEWAY SYSTEM CAN BE SITS ON THE TOP OF THE FLOOR, WALL AND SURFACE-MOUNT.

C. TYPES AND FITTING OF RACEWAYS.
   1. FLAT ELBOW: FOR MAKING DIAGONAL 45° TURNS ON A SINGLE SURFACE.
   2. TRANSITION FITTINGS: UTILIZES ABANDONED POKE – THRU OPENINGS TO BRING CABLING INTO THE RACEWAY. IT'S AVAILABLE IN 3" AND 4" SIZES.
   3. INSIDE ELBOW: IT USED FOR INTERNAL RIGHT-ANGLE TURNS.
   4. OPEN SYSTEM: IT ACCEPTS A WIDE RANGE OF COMMUNICATIONS AND A/V DEVICES FROM LEADING MANUFACTURERS.
   5. T – FITTING: IT USED FOR BRANCHING OUT INTO RIGHT ANGLES.
   6. IN-WALL ENTRANCE END FITTING: IT FEEDS THE RACEWAY FROM BEHIND A WALL. CONFIGURABLE TO PROVIDE ONE OR TWO CHANNELS OF POWER.

SWITCHBOARDS

A. SWITCHBOARDS SHALL BE MULTI-SECTION I-LINE SWITCHBOARDS.

B. SWITCHBOARDS SHALL BE DEAD-FRONT AND TOTALLY FRONT ACCESSIBLE.

C. PROVIDE STAND ALONE, MICROPROCESSOR BASED, 3-PH POWER METERING DEVICE MOUNTED RECESSED IN FRONT OF SWITCHBOARD. PROVIDE CURRENT-TRANSFORMERS & RELAYING IN SIZES AS REQUIRED.

D. MAIN BREAKER SHALL BE 100% CURRENT RATED & INCLUDE GROUND FAULT & SHUNT-TRIP.

E. MEGGER CHECK PHASE-TO-PHASE & PHASE-TO-GROUND INSULATION LEVELS PRIOR TO ENERGIZATION.

MOTOR AND CIRCUIT DISCONNECTS

A. DISCONNECT SWITCHES MAY BE GENERAL DUTY FOR 480V, & SHALL BE HEAVY DUTY FOR 600V.

B. PROVIDE RAIN-TIGHT HUBS FOR EXTERIOR DISCONNECTS.

C. PROVIDE CLASS R REJECTION FUSE CLIPS & CLASS R FUSES.

D. SERVICE DISCONNECT SWITCH SHALL BE HEAVY DUTY TYPE.

SUPPORTING DEVICES

A. LIGHTING FIXTURES SHALL BE SUPPORTED FROM BUILDING STRUCTURE & NOT FROM CEILING GRID. SECURE A MINIMUM OF TWO CORNERS (OPPOSITE) TO STRUCTURE ABOVE WITH CHAIN OR WIRE.

B. FASTEN CONDUIT TO STRUCTURAL PARTS OF BUILDING.

LIGHTING

A. U.L. LABELS MUST APPEAR ON ALL NEW LIGHTING FIXTURES. FLEXIBLE CONDUIT TAILS, UP TO 6' IN LENGTH, MAY BE USED BETWEEN JUNCTION BOXES & RECESSED LIGHTING FIXTURES. OUTLET BOXES MAY SERVE UP TO FOUR SEPARATELY RECESSED FIXTURES. BALLASTS SHALL BE ELECTRONIC HIGH-POWER FACTOR CBM LABELED.

B. PROVIDE PROPER TRIM PER REFLECTED CEILING PLAN OR ACTUAL CEILING INSTALLED.

C. PROVIDE NEW LAMPS IN ALL NEW FIXTURES.

D. PROVIDE FOUNDATIONS FOR ALL SITE LIGHTING FIXTURES/POLES AS RECOMMENDED BY MANUFACTURER.

E. SITE LIGHTING POLE FIXTURES SHALL BE RATED FOR 120 mph WINDS WITH 1.3 GUST FACTOR FOR 3SEC. PER FLORIDA BUILDING CODE 'FIGURE 1606'.

F. SITE LIGHTING FIXTURES LOCATED BETWEEN PARKING SPACES OR SUBJECT TO BEING DAMAGED BY VEHICLES, SHALL BE PROVIDED WITH 2' HIGH X 2' DIAMETER CONCRETE BASES.

G. LIGHTING FIXTURES IN MECHANICAL ROOMS, ETC., SHALL BE COORDINATED WITH EQUIPMENT.

H. EMERGENCY BATTERY BALLASTS SHALL BE 1400 LUMENS MINIMUM.

I. PROVIDE ADDITIONAL BALLAST IN ALL FIXTURES INDICATED ON DRAWINGS AS BEING CONTROLLED VIA 'DUAL LEVEL SWITCHING.'

J. ALL INTERIOR LAMPS SHALL BE 3000°K, 3500°K, 4100°K KELVIN TEMPERATURE. COORDINATE WITH ARCHITECT FOR EXACT COLOR REQUIRED.

K. EMERGENCY BATTERY BALLASTS AND BATTERY OPERATED EXIT SIGNS AND/OR EMERGENCY LIGHTS SHALL BE WIRED AHEAD OF LOCAL SWITCHING MEANS.

RED/BLACK SEPARATION

A. LEVEL I RED/BLACK REQUIREMENT

1. PHYSICAL SEPARATION:
   - A SEPARATION DISTANCE OF 1 METER SHALL BE PROVIDED BETWEEN RED EQUIPMENT AND:
     BLACK WIRELINES THAT CONNECT TO RF TRANSMITTERS AND
     BLACK EQUIPMENT WITH LINES THAT CONNECT TO RF TRANSMITTERS
   - A SEPARATION DISTANCE OF 50 CM SHALL BE PROVIDED BETWEEN RED EQUIPMENT AND BLACK WIRELINES THAT DIRECTLY LEAVE THE INSPECTABLE SPACE.
   - A SEPARATION DISTANCE OF 15 CM SHALL BE PROVIDED BETWEEN RED EQUIPMENT AND BLACK WIRELINES THAT CONNECT TO OUTSIDE THE INSPECTABLE SPACE THROUGH A DIGITAL SWITCH (SUCH AS A COMPUTERIZED TELEPHONE SWITCH, OR NETWORK ROUTER) THAT IS CONTAINED WITHIN THE INSPECTABLE SPACE.
   - UNLESS SEPARATED BY A METAL DISTRIBUTION SYSTEM SUCH AS CONDUIT OR ENCLOSED CABLE TRAY, A SEPARATION DISTANCE OF 5 CM (15 CM FOR PARALLEL CABLE LENGTHS OVER 30M) SHALL BE PROVIDED BETWEEN RED WIRELINES AND:
     BLACK WIRELINES THAT LEAVE THE INSPECTABLE SPACE; AND
     BLACK WIRELINES THAT CONNECT TO RF TRANSMITTERS.
   - RED EQUIPMENT SHALL BE SEPARATED FROM RF TRANSMITTERS IN ACCORDANCE WITH SECTION 3.6.
2. CABLES
   - RED LINES SHALL HAVE A DISTINGUISHING LABEL OR COLOR CODING THAT IDENTIFIES THE CLASSIFICATION LEVEL OF THE NSI CONVEYED. SUGGESTED COLOR CODING SCHEMES CAN BE FOUND IN TABLE 1.
   - RF WIRELINES (SUCH AS RF ANTENNA, CATV, AND SATELLITE TELEVISION CABLES) THAT LEAVE THE INSPECTABLE SPACE SHALL BE ISOLATED IN ACCORDANCE WITH SECTION 3.5.
3. ELECTRICAL ISOLATION
   - BLACK LINES CONNECTED TO RED EQUIPMENT (SUCH AS KVM, VTC, SECURE VOICE, OR VIDEO MATRIX SWITCHES) SHALL BE ELECTRICALLY ISOLATED FROM RED SIGNALS. THE LEVEL OF ISOLATION IS PROVIDED IN TABLE 2
4. POWER
   - THE REQUIREMENT FOR RED POWER SHALL BE DETERMINED BY A CTTA. IF POWER FILTERS ARE REQUIRED, THE LEVEL OF ATTENUATION WILL BE DETERMINED BY THE CTTA.
   - RF TRANSMITTERS SHALL NOT BE POWERED FROM THE SAME CIRCUIT AS RED EQUIPMENT. THE RF TRANSMITTER POWER SHOULD BE FROM A SEPARATE CIRCUIT BREAKER IN A POWER DISTRIBUTION PANEL OR FROM A SEPARATE AC-DCAC DIRECT CONVERSION UPS THAN RED EQUIPMENT. THE USE OF AN UPS DOES NOT NEGATE CTTA REQUIREMENTS FOR FACILITY BLACK POWER ISOLATION

IT SPECIFICATION

A. HORIZONTAL CABLING
   1. HORIZONTAL CABLING FOR VOICE AND DATA CIRCUITS SHALL BE 23 AWG, 4-PAIR UTP, UL/NEC CMP RATED AND BE INDEPENDENTLY VERIFIED FOR COMPLIANCE. CABLE PERFORMANCE SHALL BE INDEPENDENTLY VERIFIED BY ETL AND SHALL MEET OR EXCEED ALL TIA/EIA AND ISO CATEGORY 6A/CLASS E REQUIREMENTS.
   2. INSTALL ALL SYSTEMS IN ACCORDANCE WITH MANUFACTURER'S PRINTED INSTRUCTIONS, AS WELL AS ALL STATE OF FLORIDA CODES AND STANDARDS.
   3. INSTALL CATEGORY 6A (CAT6A) SHIELDED DROPS AT LOCATIONS DESIGNATED ON DRAWINGS ASSOCIATED WITH THIS DOCUMENT.
   4. WITHIN THE B810 BUILDING ITSELF, INSTALL FIBER MULTI-MODE OM3 (50 MICRON) WITH LC-LC CONNECTORS AT LOCATIONS DESIGNATED ON DRAWINGS ASSOCIATED WITH THIS DOCUMENT.

B. FIBER IN B810, SHOULD BE RUN FROM THE UNCLASSIFIED B810 1222 COMM ROOM TO THE B810 1255 ACAS AND 1266 SECURE VESTIBULE
   1. RUN ENCLOSED IN AN APPROPRIATE CONDUIT
   2. 24 STRANDS SINGLE-MODE LC CONNECTOR
   3. 9/125 MICRONS
   4. LEAVE A 10' SERVICE LOOP IN THE UNCLASSIFIED B810 COMM ROOM
   5. FIBER TERMINATES IN AN UNCLASSIFIED LMI NETWORK RACK IN THE UNCLASSIFIED B810 COMM ROOM, RACK AND LOCATION TO BE IDENTIFIED IN THE FIELD BY THE NETWORK ADMIN
      5.1. PARTS TO BE IDENTIFIED BY NETWORK ADMIN. COUNTS TO BE PROVIDED BY NETWORK ADMIN.
   6. WALL MOUNTED CABINETS FOR COMSEC EQUIPMENT NEEDED IN THE SECURE VESTIBULES AS IDENTIFIED; LOCATION TO BE IDENTIFIED IN THE FIELD. COUNTS TO BE PROVIDED TO FAC ENG.
      6.1. COMSEC RACK MODEL HTTPS://WWW.GRAYBAR.COM/STORE/EN/GB/WALL-MOUNT-CABINET-22119184
      6.2. HASP LOCKS X2 NEEDED FOR EACH COMSEC RACK AND ARE TO BE INSTALLED ON THE CABINETS AS DIRECTED BY IT. COUNTS TO BE PROVIDED TO FAC ENG.
      6.3. HUBBELL DATA-COMMUNICATIONS RACKS-AND-ENCLOSURES WALL-MOUNT-CABINETS 1749320
      6.4. PADLOCKS X2 NEEDED FOR EACH COMSEC RACK. COUNTS TO BE PROVIDED TO FAC ENG., SARGET 8077AD

C. ALL COPPER HORIZONTAL CABLES SHALL BE INSTALLED IN THE FOLLOWING MANNER:
   1. CABLE RACEWAYS SHALL NOT BE FILLED GREATER THAN THE NEC MAXIMUM FILL FOR THE PARTICULAR RACEWAY TYPE
   2. CABLES SHALL BE INSTALLED IN CONTINUOUS LENGTHS FROM ORIGIN TO DESTINATION (NO SPLICES) UNLESS SPECIFICALLY ADDRESSED IN THIS DOCUMENT
   3. THE CABLE'S MINIMUM BEND RADIUS OF 4 TIMES THE CABLE DIAMETER AND MAXIMUM PULLING TENSION OF 25 LBS SHALL NOT BE EXCEEDED
   4. IF A J-HOOK OR TRAPEZE SYSTEM IS USED TO SUPPORT CABLE BUNDLES ALL HORIZONTAL CABLES SHALL BE SUPPORTED AT A MAXIMUM OF FOUR-FOOT INTERVALS – AT NO POINT SHALL CABLE(S) REST ON ACOUSTIC CEILING GRIDS OR PANELS
   5. HORIZONTAL DISTRIBUTION CABLES SHALL BE BUNDLED IN GROUPS OF NOT GREATER THAN 40 CABLES (CABLE BUNDLE QUANTITIES IN EXCESS OF 40 CABLES MAY CAUSE DEFORMATION OF THE BOTTOM CABLES WITHIN THE BUNDLE)
   6. CABLE SHALL BE INSTALLED ABOVE FIRE-SPRINKLER AND SYSTEMS AND SHALL NOT BE ATTACHED TO THE SYSTEM OR ANY ANCILLARY EQUIPMENT OR HARDWARE
   7. THE CABLING SYSTEM AND SUPPORT HARDWARE SHALL BE INSTALLED SO THAT IT DOES NOT OBSCURE ANY VALVES, FIRE ALARM CONDUIT, BOXES, LOCKHEED MARTIN SUPPORT SYSTEMS, OR OTHER CONTROL DEVICES
   8. CABLES SHALL NOT BE ATTACHED TO CEILING GRID OR LIGHTING SUPPORT WIRES
   9. WHERE LIGHT SUPPORT FOR DROP CABLE LEGS IS REQUIRED, THE CONTRACTOR SHALL INSTALL CLIPS TO SUPPORT THE CABLING
   10. ANY CABLE DAMAGED OR EXCEEDING RECOMMENDED INSTALLATION PARAMETERS DURING INSTALLATION SHALL BE REPLACED BY THE CONTRACTOR PRIOR TO FINAL ACCEPTANCE AT NO COST TO THE OWNER
   11. CABLES SHALL BE IDENTIFIED BY A SELF-ADHESIVE LABEL IN ACCORDANCE WITH THE SYSTEM DOCUMENTATION SECTION OF THIS SPECIFICATION
   12. THE CABLE LABEL SHALL BE APPLIED TO THE CABLE BEHIND THE FACEPLATE ON A SECTION OF CABLE THAT CAN BE ACCESSED BY REMOVING THE COVER PLATE
   13. UNSHIELDED TWISTED PAIR CABLE SHALL BE INSTALLED SO THAT THERE ARE NO BENDS LESS THAN FOUR TIMES THE CABLES OUTSIDE DIAMETER (4 X CABLE O.D.) AT ANY POINT IN THE RUN
   14. SHIELDED TWISTED PAIR CABLES SHALL BE INSTALLED SO THAT THERE ARE NO BENDS LESS THAN FOUR TIMES THE CABLES OUTSIDE DIAMETER (4 X CABLE O.D) AT ANY POINT IN THE RUN
   15. PULLING TENSION ON 4-PAIR UTP CABLES SHALL NOT EXCEED 25-POUNDS FOR A SINGLE CABLE OR CABLE BUNDLE
   16. CABLES SHALL BE DRESSED AND TERMINATED IN ACCORDANCE WITH THE RECOMMENDATIONS MADE IN THE TIA/EIA-568-B DOCUMENT, MANUFACTURER'S RECOMMENDATIONS, AND/OR BEST INDUSTRY PRACTICES
   17. PAIR UNTWIST AT THE TERMINATION SHALL NOT EXCEED 0.25 INCH FOR CONNECTING HARDWARE
   18. CABLES SHALL BE NEATLY BUNDLED AND DRESSED TO THEIR RESPECTIVE PANELS OR BLOCKS
   19. EACH PANEL OR BLOCK SHALL BE FED BY AN INDIVIDUAL BUNDLE SEPARATED AND DRESSED BACK TO THE POINT OF CABLE ENTRANCE INTO THE RACK OR FRAME
   20. THE CABLE JACKET SHALL BE MAINTAINED AS CLOSE AS POSSIBLE TO THE TERMINATION POINT
   21. EACH CABLE SHALL BE CLEARLY LABELED ON THE CABLE JACKET BEHIND THE PATCH PANEL AT A LOCATION THAT CAN BE VIEWED WITHOUT REMOVING THE BUNDLE SUPPORT TIES
   22. FOLLOW THE APPROPRIATE LEVEL REQUIREMENTS IN THE COMMITTEE ON NATIONAL SECURITY SYSTEMS (CNSSAM) TEMPEST RED/BLACK INSTALLATION GUIDANCE
       22.1. RED AND BLACK CABLES SHOULD BE RUN WITH SEPARATION PER CNSSAM TEMPEST FOR THE APPROPRIATE LEVEL I
       22.2. RED AND BLACK WALL JACKS SHALL BE SEPARATED PER CNSSAM TEMPEST FOR THE APPROPRIATE LEVEL I
   23. CABLE LABELS SHALL NOT BE OBSCURED FROM VIEW
   24. USE SEPARATE CABLE TRAY AND SEPARATE CONDUIT FOR RED AND BLACK CABLING
   25. GREEN (UNCLASSIFIED) JACKS TO BE INSTALLED BELOW THE DESK SURFACE
   26. RED (CLASSIFIED) JACKS TO BE INSTALLED ABOVE THE DESK SURFACE
       26.1. SECURITY STANDARDS FOR THE CABLING COLOR SCHEMA:
          26.1.1. CLASSIFIED: YELLOW WITH RED VELCRO BANDING EVERY 4-6 FEET WITH CLASSIFIED PATH CABLES: YELLOW (NO VELCRO BANDING NEEDED)
          26.1.2. UNCLASSIFIED: GREEN WITH GREEN VELCRO BANDING EVERY 4-6 FEET (INCLUDES VOIP) WITH UNCLASSIFIED PATCH CABLES: BLUE (NO VELCRO BANDING NEEDED)
       26.2. FIRE: RED
       26.3. ALARM: ORANGE
       26.4. (ANALOG) PHONE: WHITE WITH GREEN VELCRO BANDING EVERY 4-6 FEET WITH WHITE PATCH CABLES
       26.5. ENVIRONMENTAL (THERMOSTAT): BLUE WITH GREEN VELCRO BANDING
       26.6. CABLE TRAY COLOR SHALL MATCH THE CEILING COLOR
       26.7. CABLING SHALL BE INCORPORATED INTO THE FURNITURE
       26.8. POWER AND DATA CABLING SHALL BE EXTENDED FROM THE WALL TO THE CONFERENCE TABLES

D. WIRE BASKET TYPE CABLE TRAY SYSTEM
   1. WORK COVERED UNDER THIS SECTION CONSISTS OF THE FURNISHING OF ALL NECESSARY LABOR, SUPERVISION, MATERIALS, EQUIPMENT, TESTS AND SERVICES TO COMPLETELY EXECUTE A COMPLETE FLEXTRAY WIRE BASKET CABLE TRAY SYSTEM AS DESCRIBED IN THIS SPECIFICATION AND ROUTED AS SHOWN ON THE DRAWINGS. FOR WITHIN THE B810 DATA CENTER, A 12" WIDE CABLE TRAY IS REQUIRED. FOR AREAS EXTERNAL TO THE B810 DATA CENTER, REQUIRED IS A 4" DEEP X 8" WIDE WIRE BASKET TYPE CABLE TRAY SYSTEM UTILIZING A MIXTURE OF WALL (SHELF MOUNT TYPE) BRACKETS THAT WILL MOUNT TO THE STUD WALLS OF THE ADJACENT OFFICES AND/OR CENTER HUNG OR TRAPEZE MOUNTS THAT WILL ANCHOR TO THE STRUCTURAL CONCRETE BEAMS ABOVE THE CEILINGS. SUPPORTS SHOULD BE MOUNTED AT A MINIMUM OF 8' (EIGHT) FOOT INCREMENTS IN ORDER TO SUPPORT PROJECTED WEIGHT LOAD CAPACITY.
   2. WIRE BASKET CABLE TRAY SYSTEMS ARE DEFINED TO INCLUDE, BUT ARE NOT LIMITED TO STRAIGHT SECTIONS OF CONTINUOUS WIRE MESH, FIELD FORMED HORIZONTAL AND VERTICAL BENDS, TEES, DROPOUTS, SUPPORTS AND ACCESSORIES. STRAIGHT SECTIONS OF WIRE BASKET CABLE TRAY SHALL BE MADE FROM STEEL MEETING THE MINIMUM MECHANICAL PROPERTIES OF ASTM A510, GRADE 1008 AND SHALL BE ELECTRO-PLATED ZINC IN ACCORDANCE WITH ASTM B633, TYPE III, SC-1.

E. THE DATA ROOM ON SHALL BE EQUIPPED WITH A TELECOMMUNICATIONS MAIN GROUNDING BUS BAR (TMGB). THE TMGB SHALL BE CONNECTED TO THE BUILDING ELECTRICAL ENTRANCE GROUNDING FACILITY. THE INTENT OF THIS SYSTEM IS TO PROVIDE A GROUNDING SYSTEM THAT IS EQUAL IN POTENTIAL TO THE BUILDING ELECTRICAL GROUND SYSTEM. THEREFORE, GROUND LOOP CURRENT POTENTIAL IS MINIMIZED BETWEEN TELECOMMUNICATIONS EQUIPMENT AND THE ELECTRICAL SYSTEM TO WHICH IT IS ATTACHED.

F. ALL RACKS, METALLIC BACKBOARDS, CABLE SHEATHS, METALLIC STRENGTH MEMBERS, SPLICE CASES, CABLE TRAYS, ETC. ENTERING OR RESIDING IN THE TELECOMMUNICATION ROOM OR EQUIPMENT ROOMS SHALL BE GROUNDED TO THE RESPECTIVE TGB OR TMGB USING A MINIMUM #6 AWG STRANDED COPPER BONDING CONDUCTOR AND COMPRESSION CONNECTORS. WHERE METALLIC PANELS ATTACHED TO THE RACK DO NOT HAVE SUFFICIENT METAL TO METAL CONTACT TO PROVIDE AN ADEQUATE PATH TO GROUND, THEY SHALL BE BONDED TO THE RACK USING A MINIMUM #14 AWG COPPER CONDUCTOR. THE COPPER CONDUCTOR SIZE SHALL BE UPGRADED BASED ON THE LARGEST POWER CONDUCTOR FEEDING ANY RACK-MOUNT EQUIPMENT. THE CONDUCTOR SHALL BE CONTINUOUS, ATTACHING ALL ISOLATED COMPONENTS IN A DAISY CHAIN FASHION FROM TOP TO BOTTOM AND BONDED TO THE RACK USING AN APPROPRIATE COMPRESSION CONNECTOR.

PLAN REVISION DATES:

LES
LEVEL ELEVEN STUDIO INC.
220 SANDLEWOOD TRL
WINTER PARK, FL 32789
407.519.9157

Narcoossee Reserve - SDP 20-0025
Townhomes
Thompkins Dr, Osceola County, FL 34771

CONSTRUCTION SHALL BE PER INDICATED DIMENSIONS AND NOTES ONLY. ANY DISCREPENCIES TO BE REPORTED TO ARCHITECT FOR CLARIFICATION!

NOT FOR CONSTRUCTION

HACKENBERG ENGINEERING
Hackenberg Engineering
PO Box 1886
Winter Park, FL 32790
FBPE Lic: CA 31660

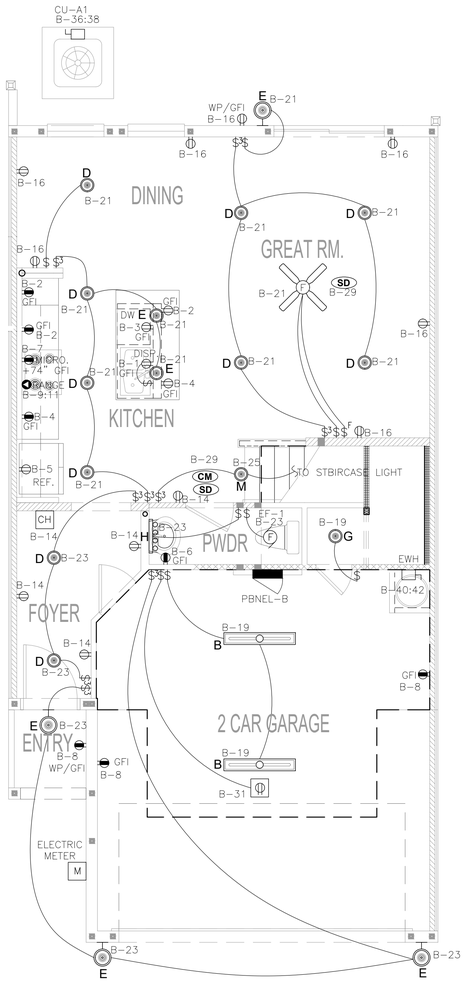

1 FIRST FLOOR UNIT PLAN "A1" - ELECTRICAL

0 2' 4' 8' 12'
1/4" = 1'-0"

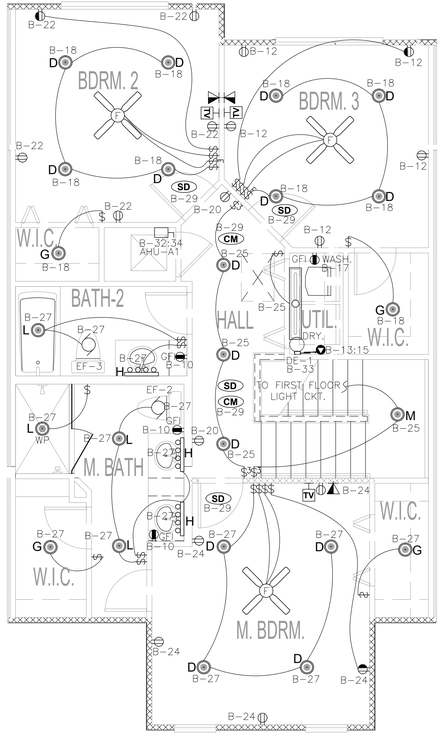

2 SECOND FLOOR UNIT PLAN "A1" - ELECTRICAL

0 2' 4' 8' 12'
1/4" = 1'-0"

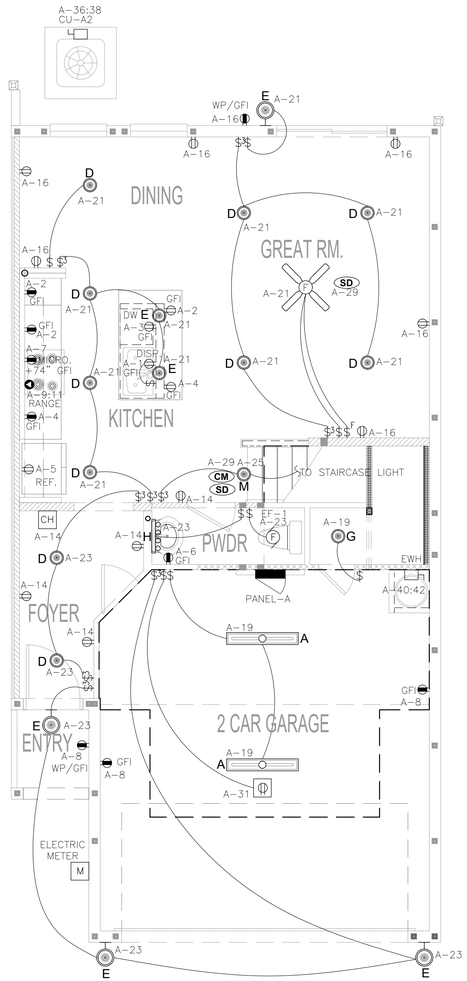

3 FIRST FLOOR UNIT PLAN "A2" - ELECTRICAL

0 2' 4' 8' 12'
1/4" = 1'-0"

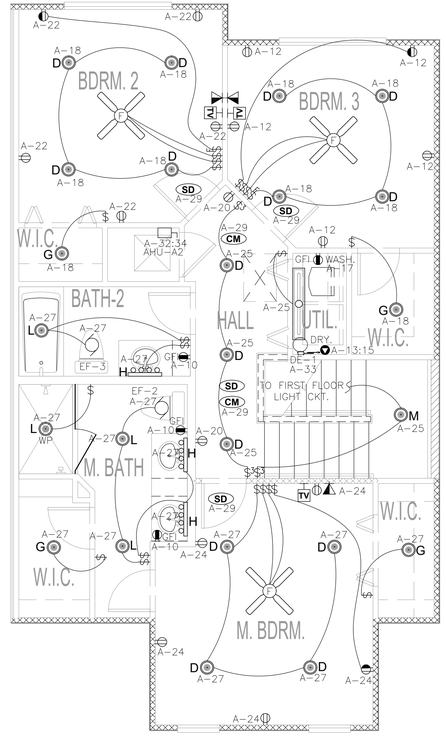

4 SECOND FLOOR UNIT PLAN "A2" - ELECTRICAL

0 2' 4' 8' 12'
1/4" = 1'-0"

GENERAL NOTES

1. ALL OUTLETS IN LAUNDRY ROOMS, KITCHEN OUTLETS INCLUDING DISHWASHER AND DISPOSAL TO BE PLACED ON A GFI CIRCUIT.
2. ALL SMOKE DETECTORS TO BE PLACED IN A AFCI CIRCUIT.
3. ALL GARAGE OUTLETS SHALL BE ON A DEDICATED CIRCUIT.
4. PROVIDE ARC-FAULT PROTECTED AND TEMPER RESISTANT RECEPTACLES IN ALL AREAS AS REQUIRED BY THE 6TH EDITION 2017 FBCR E3902.15 & 16, AND E4002.14.

PLAN REVISION DATES:

LES
LEVEL ELEVEN STUDIO INC.
220 SANDLEWOOD TRL
WINTER PARK, FL 32789
407.519.9157

Narcoossee Reserve - SDP 20-0025
Townhomes
Thompkins Dr, Osceola County, FL 34771

CONSTRUCTION SHALL BE PER INDICATED DIMENSIONS AND NOTES ONLY. ANY DISCREPENCIES TO BE REPORTED TO ARCHITECT FOR CLARIFICATION!

NOT FOR CONSTRUCTION

HACKENBERG ENGINEERING
Hackenberg Engineering
PO Box 1886
Winter Park, FL 32790
FBPE Lic: CA 31660

E-04

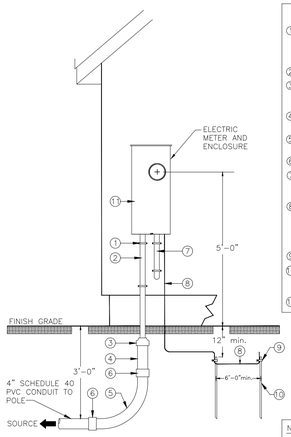

MATERIALS

1. CONDUIT (AS REQUIRED) CONDUIT MAY BE EITHER SCHEDULE 80 PVC OR GALVANIZED STEEL & INSULATED BUSHING.
2. PIPE STRAPS
3. REDUCER ELECTRICAL GRADE SCHEDULE 40 PVC BELOW FINISH GRADE.
4. 4" CONDUIT (IF NEEDED) SCHEDULE 40 PVC.
5. 4" 90° SWEEP GALVANIZED STEEL.
6. 4" ADAPTER (IF NEEDED)
7. CONDUIT (AS REQUIRED) CONDUIT MAY BE EITHER SCHEDULE 80 PVC OR GALVANIZED STEEL.
8. GROUND WIRE NO. 4 COPPER (MIN. SIZE) STAPLED EVERY 6", BONDED TO GALVANIZED STEEL CONDUIT BY CONSUMER AS REQ'D.
9. GROUND ROD CONNECTORS
10. GROUND RODS (2) MIN. 8'-0" x 5/8" DIAMETER COPPER CLAD.
11. INTERNAL SPADE CONNECTORS

NOTES:

1.)ALL CONDUIT AND ACCESSORIES MUST MEET ELECTRICAL GRADE SPECIFICATIONS.

2.)ALL SERVICE ENTRANCE WIRING MUST BE COMPLETE AND ALL NECESSARY EXCAVATION AND CONDUIT READY PRIOR TO THE TIME OF INSTALLATION OF THE UNDERGROUND SERVICE LATERAL CONDUCTORS.

3.)ALL WIRING AND MATERIALS MUST CONFORM TO THE REQUIREMENTS OF THE NATIONAL ELECTRICAL CODE AND TO APPLICABLE LOCAL CODES WHERE CONFLICT EXISTS, THE MORE STRINGENT CODE WILL APPLY.

3 SINGLE PHASE UNDERGROUND ELECTRICAL SERVICE ENTRANCE DETAIL

N.T.S

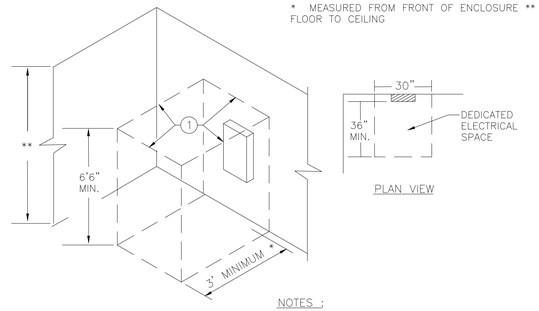

NOTES :

1. "WORKING CLEARANCE" ZONE. NO ARCHITECTURAL APPURTENANCE OR OTHER EQUIPMENT ARE ALLOWED IN THIS SPACE.

2 PANEL CLEARANCE DETAIL

N.T.S

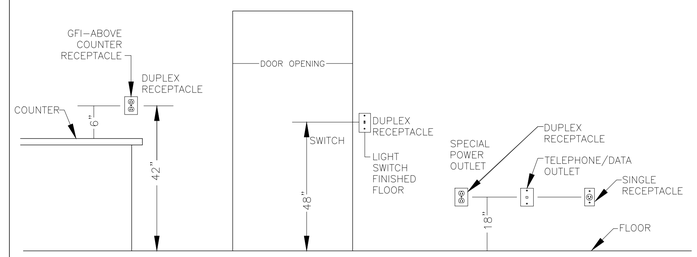

1 MOUNTING HEIGHT DETAIL

N.T.S

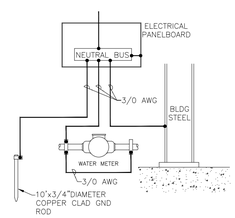

5 GROUNDING & BONDING DETAIL

N.T.S

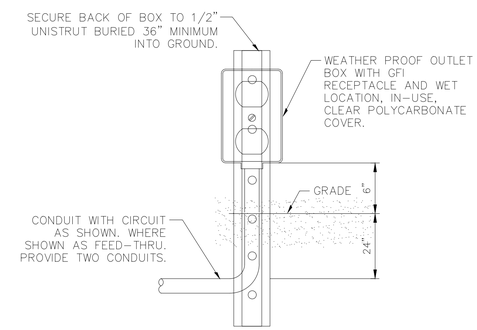

4 WEATHERPROOF IN-USE GFI OUTLET DETAIL

N.T.S

PLAN REVISION DATES:

LES

LEVEL ELEVEN STUDIO INC.

220 SANDLEWOOD TRL
WINTER PARK, FL 32789
407.519.9157

Narcoossee Reserve - SDP 20-0025
Townhomes
Thompkins Dr, Osceola County, FL 34771

CONSTRUCTION SHALL BE PER INDICATED DIMENSIONS AND NOTES ONLY. ANY DISCREPENCIES TO BE REPORTED TO ARCHITECT FOR CLARIFICATION!

NOT FOR CONSTRUCTION

HACKENBERG ENGINEERING

Hackenberg Engineering
PO Box 1886
Winter Park, FL 32790

FBPE Lic: CA 31660

E-05

PANEL-A (UNIT A2)

VOLTAGE: 120/240 PH:1 WIRE: 3
BUSSING: 200A CU
MAINS: MCB
INCOMING: BOTTOM

ENCLOSURE: NEMA 1
MOUNTING: SURFACE
BRACING: 10 KAIC. SYM.
GROUND BAR

DESCRIPTION	POLE	NOTE	CONDUIT	WIRE	GND	TRIP	CKT	LOAD PER PHASE A	LOAD PER PHASE B	CKT	TRIP	GND	WIRE	CONDUIT	NOTE	POLE	DESCRIPTION
DISPOSAL	1	4	3/4	10	10	20	1	-- --		2	20	10	10	3/4	2	1	SMALL APPLIANCE#1
DISHWASHER	1	4	3/4	10	10	20	3		-- --	4	20	10	10	3/4	2	1	SMALL APPLIANCE#2
REFRIGERATOR	1	--	3/4	10	10	20	5	-- --		6	20	10	10	3/4	2	1	BATHROOM REC. 1 FL
MICROWAVE	1	--	3/4	10	10	20	7		-- --	8	20	10	10	3/4	2	1	GARAGE/COURTYARD REC.
RANGE	2	--	3/4	8	8	40	9	-- --		10	20	10	10	3/4	2	1	M BATH REC.
							11		-- --	12	20	10	10	3/4	2	1	BEDROOM 3 REC.
DRYER	2	--	3/4	10	10	30	13	-- --		14	20	10	10	3/4	1	1	FOYER REC. FF
							15		-- --	16	20	10	10	3/4	--	1	GREAT RM REC.
WASHER	1	--	3/4	10	10	20	17	-- --		18	20	10	10	3/4	3	1	BED RM 2 & 3 LIGHT
GARAGE LIGHT	1	--	3/4	10	10	20	19		-- --	20	20	10	10	3/4	--	1	HALL REC.
GREAT ROOM LIGHT	1	--	3/4	10	10	20	21	-- --		22	20	10	10	3/4	3	1	BED RM 2 REC.
EXT. FOY. BATH LIGHT	1	--	3/4	10	10	20	23		-- --	24	20	10	10	3/4	3	1	M BED RM REC.
STAIR SF. FOYER LIGHT	1	--	3/4	10	10	20	25	-- --		26	20	10	10	3/4	3	1	EXTERIOR/ENTRY REC.
M.BED BATH RM. LIGHT	1	--	3/4	10	10	20	27		-- --	28	--	--	--	--	--	--	SPACE
SMOKE DETECTORS	1	--	3/4	10	10	20	29	-- --		30	--	--	--	--	--	--	SPACE
GARAGE DOOR OPENER	1	2	3/4	10	10	20	31		-- --	32	30	10	6	3/4	1	2	AHU-A2
DRYER VENT	1	--	3/4	10	10	20	33	-- --		34							
SPARE	--	--	--	--	--	20	35		-- --	36	35	8	10	3/4	1	2	CU-A2
SPARE	--	--	--	--	--	20	37	-- --		38							
SPACE	--	--	--	--	--	--	39		-- --	40	30	10	10	1/2	--	2	EWH-A2
SPACE	--	--	--	--	--	--	41	-- --		42							

TOTAL KVA PER PHASE _____

TOTAL CONNECTED KVA _____

SEE SERVICE CALCULATIONS FOR LOAD SUMMARY

NOTES:

1. PROVIDE 'HACR' RATED BREAKERS FOR HVAC EQUIPMENT.
2. BREAKER SHOULD BE GFCI TYPE.
3. ALL 20A/1P BREAKERS, EXCEPT SERVING KITCHEN & BATH, SHALL BE AFCI TYPE.
4. PROVIDE OVERCURRENT PROTECTION TO DISHWASHER AND DISPOSAL IN ACCORDANCE WITH NAMEPLATE DATA.

PANEL-B (UNIT A1)

VOLTAGE: 120/240 PH:1 WIRE: 3
BUSSING: 200A CU
MAINS: MCB
INCOMING: BOTTOM

ENCLOSURE: NEMA 1
MOUNTING: SURFACE
BRACING: 10 KAIC. SYM.
GROUND BAR

DESCRIPTION	POLE	NOTE	CONDUIT	WIRE	GND	TRIP	CKT	LOAD PER PHASE A	LOAD PER PHASE B	CKT	TRIP	GND	WIRE	CONDUIT	NOTE	POLE	DESCRIPTION
DISPOSAL	1	4	3/4	10	10	20	1	-- --		2	20	10	10	3/4	2	1	SMALL APPLIANCE#1
DISHWASHER	1	4	3/4	10	10	20	3		-- --	4	20	10	10	3/4	2	1	SMALL APPLIANCE#2
REFRIGERATOR	1	--	3/4	10	10	20	5	-- --		6	20	10	10	3/4	2	1	BATHROOM REC. 1 FL
MICROWAVE	1	--	3/4	10	10	20	7		-- --	8	20	10	10	3/4	2	1	GARAGE/COURTYARD REC.
RANGE	2	--	3/4	8	8	40	9	-- --		10	20	10	10	3/4	2	1	M BATH REC.
							11		-- --	12	20	10	10	3/4	2	1	BATHROOM 3 REC.
DRYER	2	--	3/4	10	10	30	13	-- --		14	20	10	10	3/4	1	1	FOYER REC. FF
							15		-- --	16	20	10	10	3/4	--	1	GREAT RM REC.
WASHER	1	--	3/4	10	10	20	17	-- --		18	20	10	10	3/4	3	1	BED RM 2 & 3 LIGHT
GARAGE LIGHT	1	--	3/4	10	10	20	19		-- --	20	20	10	10	3/4	--	1	FOYER REC. SF
GREAT ROOM LIGHT	1	--	3/4	10	10	20	21	-- --		22	20	10	10	3/4	3	1	BED RM 2 REC.
EXT. FOY. BATH LIGHT	1	--	3/4	10	10	20	23		-- --	24	20	10	10	3/4	3	1	M BED RM REC.
STAIR SF. FOYER LIGHT	1	--	3/4	10	10	20	25	-- --		26	20	10	10	3/4	3	1	EXTERIOR/ENTRY REC.
M.BED BATH RM. LIGHT	1	--	3/4	10	10	20	27		-- --	28	--	--	--	--	--	--	SPACE
SMOKE DETECTORS	1	--	3/4	10	10	20	29	-- --		30	--	--	--	--	--	--	SPACE
GARAGE DOOR OPENER	1	2	3/4	10	10	20	31		-- --	32	30	8	10	3/4	1	2	AHU-A1
DRYER VENT	1	--	3/4	10	10	20	33	-- --		34							
SPARE	--	--	--	--	--	20	35		-- --	36	25	10	6	3/4	1	2	CU-A1
SPARE	--	--	--	--	--	20	37	-- --		38							
SPACE	--	--	--	--	--	--	39		-- --	40	30	10	10	1/2	--	2	EWH-A2
SPACE	--	--	--	--	--	--	41	-- --		42							

TOTAL KVA PER PHASE _____

TOTAL CONNECTED KVA _____

SEE SERVICE CALCULATIONS FOR LOAD SUMMARY

NOTES:

1. PROVIDE 'HACR' RATED BREAKERS FOR HVAC EQUIPMENT.
2. BREAKER SHOULD BE GFCI TYPE.
3. ALL 20A/1P BREAKERS, EXCEPT SERVING KITCHEN & BATH, SHALL BE AFCI TYPE.
4. PROVIDE OVERCURRENT PROTECTION TO DISHWASHER AND DISPOSAL IN ACCORDANCE WITH NAMEPLATE DATA.

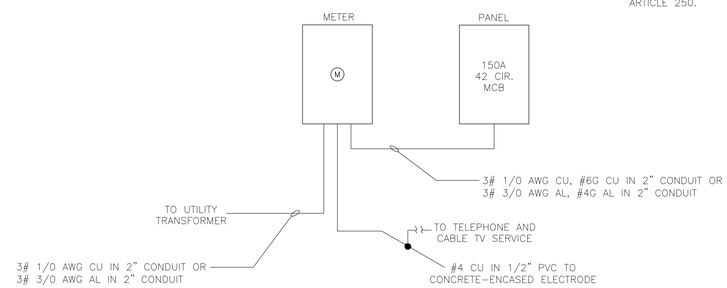

1 UNIT RISER DIAGRAM (TYPICAL)

SCALE – N.T.S

GENERAL NOTES

BONDING/GROUNDING SYSTEM AS PER NEC ARTICLE 250.

UNIT A1 CALCULATION

AREA: 2087

LOAD	VOLTS-AMPS
GENERAL LIGHTING LOAD=3VA/SF X AREA	6261 VA
SMALL APPLIANCES=2 X 1500VA	3000 VA
LAUNDRY CIRCUIT	1500 VA
REFRIGERATOR	1200 VA
RANGE/ OVEN	9000 VA
WATER HEATER	4500 VA
DISHWASHER	1000 VA
CLOTHES DRYER	5000 VA
WASHER	1200 VA
DISPOSAL	850 VA
MICROWAVE/HOOD	1200 VA
TOTAL "OTHER LOAD"	34711 VA

APPLICATION OF DEMAND FACTORS

FIRST 10KW OF "OTHER LOAD"@ 100%	10000 VA
REMAINDER @ 40%	9884 VA

AIR CONDISIONING	= 7176 VA
ELECTRIC HEAT AT 65%	= 3250 VA
HEAT PUMP UNIT	= 4080 VA
TOTAL OUTDOOR	= 7030 VA

HVAC LOAD TO BE CONSIDERED	7330 VA
TOTAL CONNECTED LOAD	42041 VA
TOTAL CONNECTED AMPS	175.2 AMP
SERVICE DEMAND LOAD (NEC 220.82) FOR INDIVIDUAL DWELLING UNIT:_____	27214 VA
SERVICE AMPS @ 120/240, 1ø	113 AMPS

UNIT A2 CALCULATION

AREA: 2087

LOAD	VOLTS-AMPS
GENERAL LIGHTING LOAD=3VA/SF X AREA	6261 VA
SMALL APPLIANCES=2 X 1500VA	3000 VA
LAUNDRY CIRCUIT	1500 VA
REFRIGERATOR	1200 VA
RANGE/ OVEN	9000 VA
WATER HEATER	4500 VA
DISHWASHER	1000 VA
CLOTHES DRYER	5000 VA
WASHER	1200 VA
DISPOSAL	850 VA
MICROWAVE/HOOD	1200 VA
TOTAL "OTHER LOAD"	34711 VA

APPLICATION OF DEMAND FACTORS

FIRST 10KW OF "OTHER LOAD"@ 100%	10000 VA
REMAINDER @ 40%	9884 VA

AIR CONDISIONING	= 7176 VA
ELECTRIC HEAT AT 65%	= 3250 VA
HEAT PUMP UNIT	= 5280 VA
TOTAL OUTDOOR	= 8530 VA

HVAC LOAD TO BE CONSIDERED	8530 VA
TOTAL CONNECTED LOAD	43241 VA
TOTAL CONNECTED AMPS	180.2 AMP
SERVICE DEMAND LOAD (NEC 220.82) FOR INDIVIDUAL DWELLING UNIT:_____	28414 VA
SERVICE AMPS @ 120/240, 1ø	118 AMPS

PLAN REVISION DATES:

LES
LEVEL ELEVEN STUDIO INC.
220 SANDLEWOOD TRL
WINTER PARK, FL 32789
407.519.9157

Narcoossee Reserve - SDP 20-0025
Townhomes
Thompkins Dr, Osceola County, FL 34771

CONSTRUCTION SHALL BE PER INDICATED DIMENSIONS AND NOTES ONLY. ANY DISCREPENCIES TO BE REPORTED TO ARCHITECT FOR CLARIFICATION!

NOT FOR CONSTRUCTION

HACKENBERG ENGINEERING
Hackenberg Engineering
PO Box 1886
Winter Park, FL 32790
FBPE Lic: CA 31660

E-06