# 1585
# CRUSADE
## 40' EXPLORATION SERIES
40' X 53'4

| REVISION SCHEDULE | | | |
|---|---|---|---|
| NO. | DATE | DESCRIPTION | BY |
| 1 | 09/17/25 | CREATE NEW MODEL | MW |
| 2 | 02-13-26 | -APPLIED FRAME WALK MARKUPS: DATED 02/12/26 | MR |

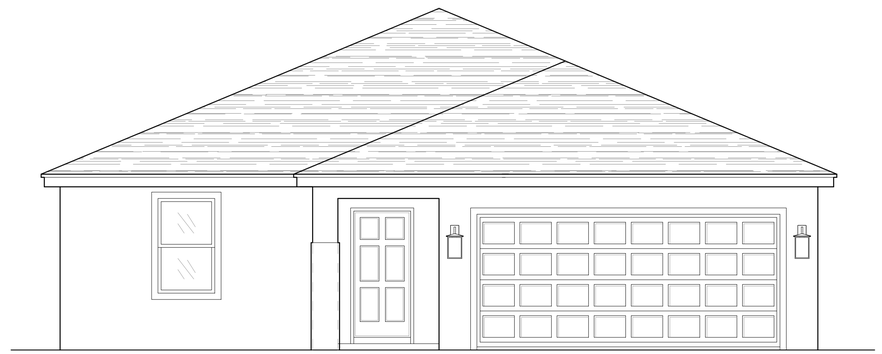

SHEET INDEX:


| | |
|---|---|
| 00 | COVER SHEET |
| 00.1 | GENERAL NOTES |
| 01.0 | SLAB INTERFACE PLAN "A" |
| 02.0 | FLOOR PLAN W/ NOTES "A" |
| 02.1 | FLOOR PLAN W/ DIMENSIONS "A" |
| 03.A | EXTERIOR ELEVS.- FRONT/ REAR "A" |
| 03.1A | EXTERIOR ELEVS.- LEFT/ RIGHT "A" |
| 04.0 | ROOF PLAN |
| E1 | UTILITY PLAN "A" |
| AD1 | DETAILS |
| S1 | FOUNDATION PLAN "A" |
| S2 | PRECAST LINTEL LAYOUT "A" |
| S3 | TRUSS LAYOUT "A" |
| D1 | TYPICAL STRUCTURAL DETAILS |
| D2 | TYPICAL STRUCTURAL DETAILS |
| D3 | TYPICAL STRUCTURAL DETAILS |
| D4 | TYPICAL STRUCTURAL DETAILS |
| D5 | TYPICAL STRUCTURAL DETAILS |


SHEET INDEX:


| | |
|---|---|
| 00 | COVER SHEET |
| 00.1 | GENERAL NOTES |
| 01.0 | SLAB INTERFACE PLAN "B" |
| 02.0 | FLOOR PLAN W/ NOTES "B" |
| 02.1 | FLOOR PLAN W/ DIMENSIONS "B" |
| 03.B | EXTERIOR ELEVS.- FRONT/ REAR "B" |
| 03.1B | EXTERIOR ELEVS.- LEFT/ RIGHT "B" |
| 04.0 | ROOF PLAN |
| E1 | UTILITY PLAN "B" |
| AD1 | DETAILS |
| S1 | FOUNDATION PLAN "B" |
| S2 | PRECAST LINTEL LAYOUT "B" |
| S3 | TRUSS LAYOUT "B" |
| D1 | TYPICAL STRUCTURAL DETAILS |
| D2 | TYPICAL STRUCTURAL DETAILS |
| D3 | TYPICAL STRUCTURAL DETAILS |
| D4 | TYPICAL STRUCTURAL DETAILS |
| D5 | TYPICAL STRUCTURAL DETAILS |


SHEET INDEX:


| | |
|---|---|
| 00 | COVER SHEET |
| 00.1 | GENERAL NOTES |
| 01.0 | SLAB INTERFACE PLAN "C" |
| 02.0 | FLOOR PLAN W/ NOTES "C" |
| 02.1 | FLOOR PLAN W/ DIMENSIONS "C" |
| 03.C | EXTERIOR ELEVS.- FRONT/ REAR "C" |
| 03.1C | EXTERIOR ELEVS.- LEFT/ RIGHT "C" |
| 04.0 | ROOF PLAN |
| E1 | UTILITY PLAN "C' |
| AD1 | DETAILS |
| S1 | FOUNDATION PLAN "C" |
| S2 | PRECAST LINTEL LAYOUT "C" |
| S3 | TRUSS LAYOUT "C" |
| D1 | TYPICAL STRUCTURAL DETAILS |
| D2 | TYPICAL STRUCTURAL DETAILS |
| D3 | TYPICAL STRUCTURAL DETAILS |
| D4 | TYPICAL STRUCTURAL DETAILS |
| D5 | TYPICAL STRUCTURAL DETAILS |


THIS STRUCTURE IS DESIGNED IN ACCORDANCE WITH THE 8th EDITION, 2023 OF THE FLORIDA BUILDING CODE-RESIDENTIAL AND IS CERTIFIED AS SUCH

LOT: 0000, COMMUNITY


PARK SQUARE HOMES RESERVES COPYRIGHT & OTHER RIGHTS RESTRICTING THESE DOCUMENTS TO THE ORIGINAL SITE OR PURPOSE FOR WHICH THEY WERE PREPARED. REPRODUCTIONS, CHANGES OR ASSIGNMENTS ARE PROHIBITED.



Park Square HOMES

A DIVISION OF PARK SQUARE ENTERPRISES, INC.
5200 Vineland Road, Suite 200
Orlando, Florida 32811
Phone: (407) 529 - 3000

TEG
THOMPSON ENGINEERING GROUP, INC
4401 Vineland Road Suite A5 Orlando, FL 32811
Ph: (407) 734-1450
Fax: (407) 734-1789
www.tegf.com


COVER SHEET

1585 CRUSADE

40' EXPLORATION SERIES

| REVISIONS | |
|---|---|
| DELTA # | DATE |
| | |

DATE: 09-05-25

SCALE: AS NOTED

DRAWN: MW

SHEET: 00


DISCLAIMER: CONTRACTOR/SUB-CONTRACTOR IS RESPONSIBLE TO REVIEW ALL INFORMATION CONTAINED HEREIN PRIOR TO COMMENCEMENT OF CONSTRUCTION. PARK SQUARE HOMES IS NOT RESPONSIBLE FOR ANY MISINTERPRETATIONS, ERRORS, OMISSIONS OR CUSTOM CHANGES MISSED AND NOT REPORTED PRIOR TO CONSTRUCTION. NO EXCEPTIONS.

**ABBREVIATIONS:**

| | |
|---|---|
| A/C | AIR CONDITIONER |
| A.F.F | ABOVE FINISHED FLOOR |
| A.H.U. | AIR HANDLER UNIT |
| ALT. | ALTERNATE |
| ALUM. | ALUMINUM |
| BRG. | BEARING |
| CAB. | CABINET |
| CANT. | CANTILEVER |
| ℄ | CENTER LINE |
| CLG. | CEILING |
| C.J. | CONTROL JOINT |
| CMU | CONCRETE MASONRY UNIT |
| CONT. | CONTINUOUS |
| CPT. | CARPET |
| D. SP. | DRYER SPACE |
| D.H. | DOUBLE HUNG |
| DIA. | DIAMETER |
| DISP | DISPOSAL |
| D.V. | DRYER VENT |
| DW | DISHWASHER |
| EA | EACH |
| ELEC | ELECTRICAL |
| ELEV | ELEVATION |
| E.O.R. | ENGINEER OF RECORD |
| E.W. | EACH WAY |
| FBC | FLORIDA BUILDING CODE |
| FBC(B) | FLORIDA BUILDING CODE, BUILDING |
| FBC(E) | FLORIDA BUILDING CODE, ENERGY CONSERVATION |
| FBC(M) | FLORIDA BUILDING CODE, MECHANCICAL |
| FBC(P) | FLORIDA BUILDING CODE, PLUMBING |
| FBC(R) | FLORIDA BUILDING CODE, RESIDENTIAL |
| F.F.E. | FINISHED FLOOR ELEVATION |
| F.G. | FIXED GLASS |
| FLR. | FLOOR |
| F.R. | FIRE RATED |
| FT | FOOT / FEET |
| FTG. | FOOTING |
| F.V. | FIELD VERIFY |
| GALV. | GALVANIZED |
| G.C. | GENERAL CONTRACTOR |
| GFCI | GROUND FAULT CIRCUIT INTERRUPTER |
| GFI | GROUND FAULT INTERRUPTER |
| G.T. | GIRDER TRUSS |
| GYP. | GYPSUM |
| HDR. | HEADER |
| HGT. | HEIGHT |
| H.B. | HOSE BIB |
| HORIZ. | HORIZONTAL |
| H.S. | HARD SURFACE |
| I.L. | ICEMAKER LINE |
| I.L.O. | IN LIEU OF |
| INT. | INTERIOR |
| L.T. | LAUNDRY TUB |
| LOC. | LOCATION |
| MAX. | MAXIMUM |
| M. CA. | MEDICINE CABINET |
| MECH. | MECHANICAL |
| MIN. | MINIMUM |
| MONO. | MONOLITHIC |
| M.P.H | MILES PER HOUR |
| NO. | NUMBER |
| N.S. | NOT TO SCALE |
| O.C. | ON CENTER |
| O.H.C. | OVERHEAD CABINETS |
| O.H.G.D. | OVERHEAD GARAGE DOOR |
| OPT. | OPTIONAL |
| PED. | PEDESTAL SINK |
| P.L.F. | POUNDS PER LINEAR FOOT |
| PLT. HGT. | PLATE HEIGHT |
| P.S.F. | POUNDS PER SQUARE FOOT |
| P.T. | PRESSURE TREATED |
| PWR | POWER |
| REF. SP. | REFRIGERATOR SPACE |
| REQ'D | REQUIRED |
| RM | ROOM |
| R.O. | ROUGH OPENING |
| R/S | ROD AND SHELF |
| SC | SOLID CORE |
| S.G.D. | SLIDING GLASS DOOR |
| S.H. | SINGLE HUNG |
| SIM. | SIMILAR |
| S.P.F. | SPRUCE PINE FUR |
| SQ. FT. | SQUARE FOOT/ FEET |
| SUB | SUB-CONTRACTOR |
| S.Y.P. | SOUTHERN YELLOW PINE |
| TEMP. | TEMPERED |
| T.O.M. | TOP OF MASONRY |
| T.O.W. | TOP OF WALL |
| TRANS. | TRANSOM |
| TYP. | TYPICAL |
| U.N.O. | UNLESS NOTED OTHERWISE |
| VERT. | VERTICAL |
| V.P. | VAPOR PROOF |
| V.T.R. | VENT THRU ROOF |
| W/ | WITH |
| W.C. | WATER CLOSET |
| W. SP. | WASHER SPACE |
| W.H. | WATER HEATER |
| W.P. | WEATHER PROOF |
| W.S. | WATER SOFTENER |

| PER FBC R301- TABLE R301.5 | | |
|---|---|---|
| GUARDRAILS & HANDRAILS | CONC. LOAD | 200 LBS |
| GUARDRAIL IN-FILL COMPONENTS | CONC. LOAD | 50 LBS |
| STAIRS | CONC. LOAD | 300 LBS |
| **PER FBC R312- R312.1.2 & R312.1.3 & R311.7.8.1** | | |
| GUARDRAILS HEIGHT | | 36" MIN. |
| HANDRAIL HEIGHT | | 34" MIN. TO 38" MAX. |
| GUARDRAIL OPENING LIMITATIONS | | 4" DIAMETER MAX. |

| EERO- R310.2.1- FBCR2023 | | |
|---|---|---|
| SH25 | NET CLEAR OPNG. HEIGHT 32" X NET CLEAR OPNG. WIDTH 27 1/2" = 6.119 SQFT | NET CLEAR OPENING OF NOT LESS THAN 5.7 SQFT<br>MIN. NET CLEAR OPNG. HEIGHT DIMENSION SHALL BE 24".<br>THE MIN. NET CLEAR OPNG. WIDTH DIMENSION SHALL BE 20".<br>MIN. NET CLEAR OPNG. FOR GRADE-FLOOR EMERGENCY ESCAPE & RESCUE OPNG. SHALL BE- 5 SQFT |
| SH25 | 63" H. X 37" W. WDW SIZE | |

**THE ANSI STANDARD FOR MEASURING HOUSES:**

NATIONAL STANDARD Z765-1996 NEW CONSTRUCTION THE ANSI STANDARDS BASE FLOOR AREA CALCULATIONS ON THE EXTERIOR DIMENSIONS OF THE BUILDING AT EACH FLOOR LEVEL & INCLUDE ALL INTERIOR WALLS & VOIDS. FOR ATTACHED UNITS, THE OUTSIDE DIMENSION IS THE CENTER LINE OF THE COMMON WALLS. INTERNAL ROOM DIMENSIONS AREN'T USED IN THIS SYSTEM OF MEASURING. THE ANSI STANDARDS BASE FLOOR AREA CALCULATIONS ON THE EXTERIOR DIMENSIONS OF THE BUILDING AT EACH FLOOR LEVEL & INCLUDE ALL INTERIOR WALLS & VOIDS. FOR ATTACHED UNITS, THE OUTSIDE DIMENSION IS THE CENTER LINE OF THE COMMON WALLS. INTERNAL ROOM DIMENSIONS AREN'T USED IN THIS SYSTEM OF MEASURING.

THE ANSI STANDARDS BASE FLOOR AREA CALCULATIONS ON THE EXTERIOR DIMENSIONS OF THE BUILDING AT EACH FLOOR LEVEL & INCLUDE ALL INTERIOR WALLS & VOIDS SEPARATED INTO TWO AREAS:

1. AIR-CONDITIONED SPACE
2. NON-AIR-CONDITIONED SPACE (GARAGES, PATIOS, PORCHES, BREEZEWAYS)

THE ANSI STANDARDS DEFINE "FINISHED AREA" AS AN ENCLOSED AREA IN A HOUSE SUITABLE FOR YEAR-ROUND USE, EMBODYING WALLS, FLOORS & CEILINGS THAT ARE LIKE THE REST OF THE MEASUREMENTS MUST BE TAKEN TO THE NEAREST INCH OR TENTH OF A FOOT, & FLOOR AREA MUST BE REPORTED TO THE NEAREST SQUARE FOOT. THESE WOULD INCLUDE BONUS/ATTIC SPACES & ARE USUALLY LISTED SEPARATELY.

**MISCELLANEOUS:**

1. CONTRACTOR TO VERIFY ALL DIMENSIONS ON JOB SITE.
2. DO NOT SCALE PRINTS! PLANS ARE TO SCALED AS NOTED, UNLESS SPECIFIED N.T.S. CONSTRUCTION TO BE FROM CALCULATED DIMENSIONS ONLY. ANY DISCREPANCIES OR ERRORS TO BE REPORTED PROMPTLY TO SUPERVISOR FOR CLARIFICATION.
3. PULL ALL DIMENSIONS FROM THE REAR OF PLAN
4. ALL FINISH FLOOR ELEVATIONS ARE TO TOP OF ROUGH SLAB OR TO TOP OF STRUCTURE U.N.O.
5. ANCHOR THE CONDENSER UNIT TO SLAB PER CODE: M 1307.1 - M1307.2
6. IT IS THE RESPONSIBILITY OF THE GENERAL CONTRACTOR TO INSTALL ALL MATERIALS MEETING FLORIDA APPROVAL COMPLIANCE TO AVOID WATER INTRUSION & MOISTURE INTRUSION ON WINDOWS, DOORS, ROOF & ANY OTHER AREA AROUND EACH SINGLE FAMILY HOUSE/ APARTMENT/ CONDOMINIUM/ TOWNHOUSE.

**EXTERIOR WALLS:**

1. ASSUME ALL EXTERIOR WALLS TO BE LOAD BEARING.
2. SEE STRUCTURAL DRAWINGS FOR CMU WALL REINFORCEMENT LOCATIONS
3. INTERIOR SURFACE OF CMU WALL TO HAVE 1/2" GPBD APPLIED TO 1X P.T. VERTICAL FURRING BATTS SPACED @ 16" O.C. ATTACH FURRING TO CONCRETE WALL AS REQUIRED.
4. SECOND FLOOR EXTERIOR WALLS TO BE WOOD STUDS.
5. REFER TO DETAIL SHEETS FOR FLASHING REQUIREMENTS AT ALL WOOD TO MASONRY INTERFACES
5. REFER TO TYPICAL DETAIL SHEET FOR EXTERIOR WALL FINISH SPECIFICATIONS
6. ALL EXTERIOR CEILINGS (PORCH & PATIOS) SHALL HAVE SAG-RESISTANT GYP SOFFIT BOARD.

**INTERIOR WALLS:**

1. ALL INTERIOR WALLS SHALL HAVE STANDARD 1/2" GYP BD, EXCEPT IN HIGH HUMIDITY & WET AREAS.
2. HIGH HUMIDITY & WET AREAS SHALL HAVE 1/2" DENSSHIELD TILE BACKER GYPSUM BOARD.
3. ALL INTERIOR CEILINGS SHALL HAVE PER FBCR 702.3.5 1/2" SAG-RESISTANT GYP BD. INSTALL PERPENDICULAR TO FRAMING.
4. TILE IN TUBS, SHOWERS, & WALL PANELS IN SHOWER AREAS ARE TO HAVE CEMENT, FIBER-CEMENT, OR GLASS MAT GYPSUM BACKERS R702.3.7 / R702.4.2 2023 FBC-R 8TH EDITION.
5. 2023 FBC-R 8TH EDITION TABLE R302.6: 5/8" TYPE "X" GYPSUM BOARD OR EQUIVALENT IS REQUIRED FOR A GARAGE CEILING WITH HABITABLE ROOMS ABOVE. 1/2" MINIMUM GYPSUM BOARD IS REQUIRED ON GARAGE SIDE OF INTERIOR WALLS.
6. ALL PLATES & SLEEPERS ON CONCRETE SLAB, WHICH ARE IN DIRECT CONTACT WITH THE EARTH, SHALL BE PRESSURE TREATED.
7. ALL INTERIOR WALL PLATES, OTHER THAN SHEAR WALLS, ON CONC. SLAB TO BE ATTACHED W/ POWER ACTUATED FASTENERS, SPACED @ 48" O.C. MAX.
8. ALL WOOD BRG. INTERIOR PARTITIONS SHALL BE 2X4 STUDS SPACED @ 16" O.C. WITH DOUBLE TOP PLATE, U.N.O.
9. WOOD CONSTRUCTION SHALL CONFORM TO THE AMERICAN FOREST & PAPER ASSOCIATION (AF&PA) "NATIONAL SPECIFICATION FOR WOOD CONSTRUCTION", LATEST EDITION.

**MEANS OF EGRESS:**

1. NOT LESS THAN ONE EGRESS DOOR SHALL BE PROVIDED IN EACH DWELLING UNIT. THE EGRESS DOOR SHALL BE SIDE-HINGED, & SHALL PROVIDE A CLEAR WIDTH OF NOT LESS THAN 32 INCHES WHERE MEASURED BETWEEN THE FACE OF THE DOOR & THE STOP, WITH THE DOOR OPEN 90 DEGREES. THE CLEAR HEIGHT OF THE DOOR OPENING SHALL BE NOT LESS THAN 78 INCHES IN HEIGHT MEASURED FROM THE TOP OF THE THRESHOLD TO THE BOTTOM OF THE STOP.
2. RAMPS SERVING EGRESS DOOR REQUIRED BY SECTION R311.2 SHALL HAVE A SLOPE OF NOT MORE THAN 1 UNIT VERTICAL IN 12 UNITS HORIZONTAL (8.3 % SLOPE). ALL OTHER RAMPS SHALL HAVE A MAXIMUM SLOPE OF 1 UNIT VERTICAL IN 8 UNITS HORIZONTAL (12.5% SLOPE)
3. THE WIDTH OF A HALLWAY SHALL BE NOT LESS THAN 36 INCHES MEASURED FROM FINISHED MATERIALS.
4. WINDOWS DESIGNATED AS EGRESS SHALL COMPLY WITH SECTION R310.2
5. ALL EMERGENCY ESCAPE AND RESCUE OPENINGS SHALL HAVE THE BOTTOM OF THE CLEAR OPENING NOT MORE THAN 44"MIN. A.F.F.- R310.2 - FBC-R (2023)
6. IN DWELLING UNITS, WHERE THE BOTTOM OF THE CLEAR OPENING OF AN OPERABLE WINDOW OPENING IS LOCATED LESS THAN 24"ABOVE FINISH FLOOR & GREATER THAN 72" FINISHED GRADE MUST COMPLY WITH FBCR 312.2

**TERMITE PROTECTION:**

1. PENETRATION. PROTECTIVE SLEEVES AROUND PIPING PENETRATING CONCRETE SLAB-ON-GRADE FLOORS SHALL NOT BE OF CELLULOSE CONTAINING MATERIALS. IF SOIL TREATMENT IS USED FOR SUBTERRANEAN TERMITE PROTECTION, THE SLEEVE SHALL HAVE A MAXIMUM WALL THICKNESS OF 0.010 INCH, & BE SEALED WITHIN THE SLAB USING A NON-CORROSIVE CLAMPING DEVICE TO ELIMINATE THE ANNULAR SPACE BETWEEN THE PIPE & THE SLEEVE. NO TERMITICIDES SHALL BE APPLIED INSIDE THE SLEEVE.
2. PROTECTION AGAINST DECAY & TERMITES. - CONDENSATE LINES, IRRIGATION SPRINKLER SYSTEM RISERS FOR SPRAY HEADS, & ROOF DOWNSPOUTS SHALL DISCHARGE AT LEAST 1 FOOT (305 MM) AWAY FROM THE STRUCTURE SIDEWALL, WHETHER BY UNDERGROUND PIPING, TAIL EXTENSIONS, OR SPLASH BLOCKS GUTTERS WITH DOWNSPOUTS ARE REQUIRED ON ALL BUILDINGS WITH EAVES OF LESS THAN 6 INCHES (152 MM) HORIZONTAL PROJECTION EXCEPT FOR GABLE END RAKES OR ON A ROOF ABOVE ANOTHER ROOF.

**DOORS AND WINDOWS:**

1. WINDOW & DOOR SUPPLIERS SHALL PROVIDE CURRENT ROUGH OPENING INFORMATION WHICH, SHALL HAVE PRECEDENCE OVER THE WINDOW & DOOR SCHEDULES ON PLAN.
2. CONTRACTOR & SUPPLIER TO VERIFY WINDOW LOCATION, TYPE (FIN VS. FLANGE), HEADER HEIGHTS, & ROUGH OPENINGS PRIOR TO DELIVERY.
3. WINDOWS & DOORS SHALL BE INSTALLED IN ACCORDANCE WITH THE MANUFACTURER'S INSTALLATION INSTRUCTIONS
4. ALL GLASS LOCATED IN HAZARDOUS LOCATIONS SHALL BE TEMPERED & COMPLY WITH SECTION R308 OF THE 2023 FBC-R 8TH EDITION.
5. WINDOW CONTRACTOR TO VERIFY ROUGH OPENINGS OF ALL FIELD ASSEMBLED FIXED GLASS WINDOW UNITS PRIOR TO INSTALLATION.
6. WINDOW ROUGH OPENING INCLUDES 1X P.T. FRAME ATTACHED TO CMU'S.
7. DOOR ROUGH OPENING INCLUDES 2X P.T. FRAME ATTACHED TO CMU'S.
8. ALL WINDOWS IN WIND BORN DEBRIS AREAS SHALL BE PROTECTED FROM WIND BORN DEBRIS. PROVIDE SHUTTERS CERTIFIED TO MEET MIAMI-DADE IMPACT TEST. SHUTTERS MUST BE ROLL-DOWN, PANEL ACCORDION OR OTHER APPROVED DESIGN TYPE. BUILDER TO SUBMIT MANUFACTURER, MODEL NO. INSTALLATION INSTRUCTIONS, & COPY OF MIAMI-DADE IMPACT TEST DATA FOR PROPOSED SHUTTERS.
9. WINDOW & DOOR ASSEMBLIES TO CONFORM TO 2023 FBC-R CHAPTER 6, SECTION 609. INTERIOR FACE OF WINDOW, FASTEN BUCK TO MASONRY W/ 1/4" X 3" TAPCONS, 6" FROM EDGES & 16" O.C. MAX. 2X P.T. BUCKS/NAILERS SHALL EXTEND BEYOND.
10. BUCKS LESS THAN 2X TO BE FASTENED W/ CUT NAILS OR EQUIVALENT. STRUCTURAL CONNECTION OF WINDOW TO STRUCTURE BY OTHERS IN THIS CASE.
11. EXTERIOR WINDOWS & SLIDING DOORS SHALL BE TESTED & COMPLY WITH AAMA/WDMA/CSA 101/I.S.2/A440 OR TAS 202 (HVHZ SHALL COMPLY WITH TAS 202 AND ASTM E1300). EXTERIOR SIDE HINGED DOORS SHALL COMPLY WITH AAMA/WDMA/CSA 101/I.S.2/A440 OR ANSI/WMA100 OR SECTION R609.5 IN THE 2023 FBC-R.
12. ALL GARAGE/OVERHEAD DOORS SHALL BE LISTED & TESTED FOR 30 SECONDS AT DESIGN PRESSURE (+/-) TO INCLUDE A 10 SECOND GUST AT 1.5 TIMES THE DESIGN PRESSURE.

**ROOFING:**

1. THE ROOF PLAN DEPICTED IS NOT INTENDED TO SERVE AS A TRUSS DESIGN.
2. SEE BUILDING SECTIONS, WALL SECTIONS & ELEVATIONS FOR BEARING HEIGHTS
3. 12" OVERHANG U.N.O./ PLUMB CUT FASCIA/ ROOF PITCH PER ELEVATION/ SHINGLES U.N.O.
4. FLASHING SHALL BE INSTALLED AT WALL & ROOF INTERSECTIONS, AT GUTTERS, AT ALL CHANGES IN ROOF SLOPE OR DIRECTION, & AROUND ROOF OPENINGS.
5. STEP FLASHING SHALL BE USED ON ALL ROOF TO WALL INTERSECTIONS ON RAKES.
6. ALL PENETRATIONS THROUGH ROOF ARE TO BE LOCATED ON REAR OR IF NECESSARY ON THE SIDE OF THE ROOF BEHIND THE FRONT FACADE ZONE.
7. CLAY & CONCRETE TILE (IF APPLICABLE):
   i. PER FBC-R 2023 8TH EDITION R905.3, THE INSTALLATION OF CLAY AND CONCRETE TILE SHALL BE IN ACCORDANCE WITH THE MANUFACTURER'S INSTALLATION INSTRUCTIONS, OR RECOMMENDATIONS OF FRSA/TRI FLORIDA HIGH WIND CONCRETE & CLAY ROOF TILE INSTALLATION MANUAL, LATEST EDITION, WHERE THE VASD IS DETERMINED IN ACCORDANCE WITH SECTION R301.2.1.3.
   ii. UNLESS OTHERWISE NOTED, REQUIRED UNDERLAYMENT SHALL COMPLY WITH THE UNDERLAYMENT MANUFACTURER'S INSTALLATION INSTRUCTIONS IN ACCORDANCE WITH THE FRSA/TRI FLORIDA HIGH WIND CONCRETE & CLAY ROOF TILE INSTALLATION MANUAL, LATEST EDITION, WHERE THE VASD IS DETERMINED IN ACCORDANCE WITH SECTION R301.2.1.3.
8. ASPHALT SHINGLES (IF APPLICABLE):
   i. WIND RESISTANCE OF ASPHALT SHINGLES. - ASPHALT SHINGLES SHALL BE INSTALLED IN ACCORDANCE WITH 2023 FBC-R (8TH EDITION), SECTION R905.2.6 AND R905.2.6.1.
   ii. ASPHALT SHINGLES SHALL ONLY BE USED ON ROOF SLOPES OF TWO UNITS VERTICAL IN 12 UNITS HORIZONTAL (2:12) OR GREATER. FOR ROOF SLOPES FROM TWO UNITS VERTICAL IN 12 UNITS HORIZONTAL (2:12) & LESS THAN FOUR UNITS VERTICAL IN 12 UNITS HORIZONTAL (4:12), TWO LAYERS OF UNDERLAYMENT COMPLYING WITH ASTM D226, TYPE II, ASTM D4869, TYPE III OR TYPE IV OR ASTM D8257 IS REQUIRED IN ACCORDANCE WITH SECTION R905.1.1. FOR ROOF SLOPES FROM FOUR UNITS VERTICAL IN 12 UNITS HORIZONTAL (4:12) & GREATER, ONE LAYER OF UNDERLAYMENT COMPLYING WITH ASTM D226, TYPE II, ASTM D4869, TYPE III OR IV OR ASTM D8257 IS REQUIRED IN ACCORDANCE WITH SECTION R905.1.1.
   iii. AS AN ALTERNATIVE, THE ENTIRE ROOF DECK SHALL BE COVERED WITH AN APPROVED SELF-ADHERING POLYMER MODIFIED BITUMEN UNDERLAYMENT COMPLYING WITH ASTM D1970 INSTALLED IN ACCORDANCE WITH BOTH THE UNDERLAYMENT MANUFACTURER'S & ROOF COVERING MANUFACTURER'S INSTALLATION INSTRUCTIONS FOR THE DECK MATERIAL, ROOF VENTILATION CONFIGURATION & CLIMATE EXPOSURE FOR THE ROOF COVERING TO BE INSTALLED. REFER TO R905.1.1.1.

**INSULATION:**

1. INSULATE ALL EXTERIOR FRAME WALLS WITH R-13 BATT FIBERGLASS INSULATION.
2. INSULATE CONDITIONED ATTIC SPACE WITH R-30 BLOWN FIBERGLASS. INACCESSIBLE ATTIC SPACE SHALL RECEIVE R-30 BATT INSULATION.
3. INSULATE ALL CMU WALLS (THAT REQUIRE 1" P.T. FURRING STRIPS) WITH R4.1 FI-FOIL PANELS.
4. APPLY HILTI FOAM FILLER AT EXTERIOR WALLS AROUND: WINDOW FRAMES, EXTERIOR DOOR FRAMES, GAPS AROUND PIPES, VENTS, OUTLETS, ETC.
5. INSULATE ALL ATTIC KNEE WALLS WITH R-38 BATTS.
6. APPLY OWENS CORNING ENERGY COMPLETE TO THE TOP OF ALL CONDITIONED SPACE WALLS THAT INTERACT WITH UNCONDITIONED ATTIC SPACE ABOVE.

**CABINETS:**

1. CABINET MANUFACTURE'S SHOP DRAWINGS TAKE PRECEDENCE OVER THE INTERIOR CABINET ELEVATIONS SHOWN ON THESE DRAWINGS.
2. SEE SUPPLIER / MFR'S DRAWINGS FOR KITCHEN, CABINETRY/MILLWORK & RESTROOM LAYOUTS.

**PLUMBING:**

1. PLUMBING CONTRACTOR SHALL BE RESPONSIBLE TO PROPERLY SIZE, DESIGN, & INSTALL ALL PLUMBING SYSTEM COMPONENTS BY THE TERMS OF THEIR APPROVAL, IN ACCORDANCE WITH THE CONDITIONS OF THE LISTING, & PER THE CURRENT EDITION OF THE FBC(P), THE FBC(R), THE FBC, OR AS APPLICABLE.
2. PROVIDE RECESS HOT & COLD WATER WITH DRAIN @ WASHER SPACE.
3. PROVIDE COLD WATER LINE FOR ICE MAKER LINE @ REF. SPACE.
4. VENT DRYER THRU ROOF. NO VENT STACKS SHALL PENETRATE THROUGH ROOF CRICKETS, VALLEYS, OR RIDGES. BUILDER SHALL VERIFY & APPROVE ALL LOCATIONS.

**ELECRICAL:**

1. IAW NEC 2020- 210.12-ALL 15A OR 20A, 120V BRANCH CIRCUITS SUPPLYING OUTLETS OR DEVICES IN THE FOLLOWING LOCATIONS REQUIRE AFCI PROTECTION- KITCHEN, FAMILY RMS, DINING RMS, LIVING RMS, PARLORS, LIBRARIES, BEDROOMS, DENS, CLOSETS, SUNROOMS, RECREATION RMS, HALLWAYS OR SIMILAR AREAS SHALL BE PROTECTED BY A LISTED AFCI DEVICE OF THE COMBINATION TYPE.
2. IAW NEC 2020- 406.12, ALL 15A AND 20A, 125V RECEPTACLES SHALL BE LISTED AS TAMPER RESISTANT.
3. ALL SERVICES SUPPLYING DWELLING UNITS SHALL BE PROVIDED WITH A SURGE-PROTECTION DEVICE (SPD). THE SPD SHALL BE A TYPE (1) OR TYPE (2) SPD.
4. ALL OUTLETS IN BATHROOMS, KITCHEN, GARAGES & LAUNDRY ROOM SHALL BE GFCI
5. SMOKE ALARMS SHALL BE IN ALL SLEEPING AREAS, SHALL BE INTERCONNECTED, SHALL BE WITHIN 1' TO 3' OF PEAK & SHALL BE 3' FROM THE SUPPLY OR RETURN AIR- STREAM & EQUIPPED W/ A BATTERY BACKUP. ALARMS MAY NOT BE CONNECTED WHERE ALARMS ARE WIRELESS & ALL ALARMS SOUND UPON ACTIVATION IAW FBC-R R314.3 & R314.4.
6. ALL ELECTRICAL WORK TO BE DONE PER NFPA70-NEC 2020
7. ADDITIONAL ELECTRODE MAY BE REQUIRED IN ACCORDANCE WITH NEC 250.53(A)(2)
8. ALL DWELLING UNIT RECEPTACLE WILL BE IN ACCORDANCE WITH NFPA70-NEC2020 - ARTICLE 210-52

**MECHANICAL:**

1. EQUIPMENT LOCATIONS TO BE FIELD VERIFIED & MAY VARY DEPENDANT UPON COMMUNITY & MUNICIPALITY CODES.
2. COMPLETE DUCT DESIGN W/ SIZES & R-VALUE COMPLYING W/ THE FLORIDA ENERGY EFFICIENCY CODE FOR BUILDING CONSTRUCTION 610.1 ABC.1
3. APPLIANCES SHALL BE ACESSIBLE FOR INSPECTION, SERVICE, REPAIR & REPLACEMENT WITHOUT REMOVING PERMANENT CONSTRUCTION.
   A) CHAPTER 13 OF THE FBC-R 2023 8TH EDITION, SECTION M1305.1
4. AIR CONDITIONING SYSTEM SHALL BE COMPLETELY BALANCED. ALL ROOMS ISOLATED FROM THE RETURN AIR SHALL BE PROVIDED WITH MEANS TO COMPLY WITH SECTION M1602 OF THE FBC-R 2023 8TH EDITION.
5. ALL WATER HEATERS HAVING AN IGNITION SOURCE TO BE ELEVATED SUCH THAT THE SOURCE OF IGNITION IS MINIMUM 18" ABOVE GARAGE FLOOR UNLESS WATER HEATER IS LISTED AS FLAMMABLE VAPOR IGNITION RESISTANT. IAW FBC-R 2023 8TH EDITION P2801.7
6. ALL EQUIPMENT & APPLIANCES, INCLUDING WATER HEATERS HAVING AN IGNITION SOURCE TO BE ELEVATED SUCH THAT THE SOURCE OF IGNITION IS MINIMUM 18" ABOVE GARAGE FLOOR UNLESS IT IS LISTED AS FLAMMABLE VAPOR IGNITION RESISTANT. IAW FBC-R 2023 8TH EDITION.
7. THE MAXIMUM ALLOWABLE EXHAUST DUCT LENGTH SHALL BE DETERMINED BY ONE OF THE METHODS SPECIFIED IN SECTIONS M1502.4.5.1 THROUGH M1502.4.5.3

**STAIRS:**

1. SEE STAIR SECTIONS FOR TREAD & RISER GENERAL REQUIREMENTS.
2. ACCESSIBLE SPACE UNDER STAIRS SHALL BE PROTECTED BY 1/2" GYPSUM BOARD.
3. HANDRAIL CONTINUITY PER R311.7.8.2.- HANDRAILS FOR STAIRS SHALL BE CONTINUOUS FOR FULL LENGTH OF THE FLIGHT, FROM A POINT DIRECTLY ABOVE THE TOP RISER OF THE FLIGHT TO A POINT DIRECTLY ABOVE THE LOWEST RISER OF THE FLIGHT. HANDRAIL ENDS SHALL BE RETURNED OR SHALL TERMINATE IN NEWEL POST OR SAFETY TERMINALS. HANDRAILS ADJACENT TO A WALL SHALL HAVE A SPACE OF NO LESS THAN 1 1/2"(38MM) BETWEEN THE WALL & THE HANDRAIL.

**SWIMMING POOLS:**

1. CHAPTER 45 PRIVATE SWIMMING POOLS - OUTDOOR SWIMMING POOLS SHALL BE PROVIDED WITH A BARRIER COMPLYING W/ R4501.17.1. THROUGH R4051.17.1.14.

DISCLAIMER: CONTRACTOR/SUB-CONTRACTOR IS RESPONSIBLE TO REVIEW ALL INFORMATION CONTAINED HEREIN PRIOR TO COMMENCEMENT OF CONSTRUCTION. PARK SQUARE HOMES IS NOT RESPONSIBLE FOR ANY MISINTERPRETATIONS, ERRORS, OMISSIONS OR CUSTOM CHANGES MISSED AND NOT REPORTED PRIOR TO CONSTRUCTION. NO EXCEPTIONS.

THIS STRUCTURE IS DESIGNED IN ACCORDANCE WITH THE 8th EDITION, 2023 OF THE FLORIDA BUILDING CODE-RESIDENTIAL AND IS CERTIFIED AS SUCH

LOT: 0000, COMMUNITY

PARK SQUARE HOMES RESERVES COPYRIGHT & OTHER RIGHTS RESTRICTING THESE DOCUMENTS TO THE ORIGINAL SITE OR PURPOSE FOR WHICH THEY WERE PREPARED. REPRODUCTIONS, CHANGES OR ASSIGNMENTS ARE PROHIBITED.

TEG
THOMPSON ENGINEERING GROUP, INC
4401 Vineland Road Suite A6 Orlando, FL. 32811
Ph: (407) 734-1450
Fax: (407) 734-1790
www.tegfl.com

Park Square HOMES
A DIVISION OF PARK SQUARE ENTERPRISES, INC.
5200 Vineland Road, Suite 200
Orlando, Florida 32811
Phone: (407) 529 - 3000

GENERAL NOTES

1585 CRUSADE

40' EXPLORATION SERIES

| REVISIONS | |
|---|---|
| DELTA # | DATE |
| | |

DATE: 09-05-25

SCALE: AS NOTED

DRAWN: MW

SHEET: 00.1

## FOUNDATION NOTES

1. CONTRACTOR VERIFY ALL DIMENSIONS ON JOB SITE.
2. DO NOT SCALE PRINTS; CONSTRUCTION TO BE FROM CALCULATED DIMENSIONS ONLY. ANY DISCREPANCIES OR ERRORS TO BE REPORTED PROMPTLY TO SUPER-VISOR FOR CLARIFICATION.
3. WATER HEATER T & P RELIEF VALVE SHALL BE FULL SIZE TO EXTERIOR. WATER HEATER AT OR ABOVE FLOOR LEVEL SHALL BE IN A PAN WITH DRAIN TO EXTERIOR. WATER HEATER SHALL HAVE APPROVED THERMAL EXPANSION DEVICE.
4. PAVERS MAY BE USED I.L.O. CONCRETE SLABS IN PATIO, PORCH, DRIVE AND WALKWAY AREAS. DELETE SLAB IN AREAS PAVERS ARE USED. VERIFY W/ COMMUNITY SPECIFICATIONS
5. MECHANICAL EQUIP. LOCATIONS TO BE FIELD VERIFIED & MAY BE DEPENDANT UPON COMMUNITY AND MUNICIPALITY CODES.
6. IN LIEU OF TREATING THE SOIL, AN ALTERNATIVE TO TERMITE TREATED SOIL CAN BE TERMICIDE.
7. BORA-CARE TO BE APPLIED ON INTERIOR WALLS IAW MANUFACTURER'S INSTRUCTIONS AND SPECIFICATIONS, PURSUANT TO FBC-R- CURRENT EDITION.

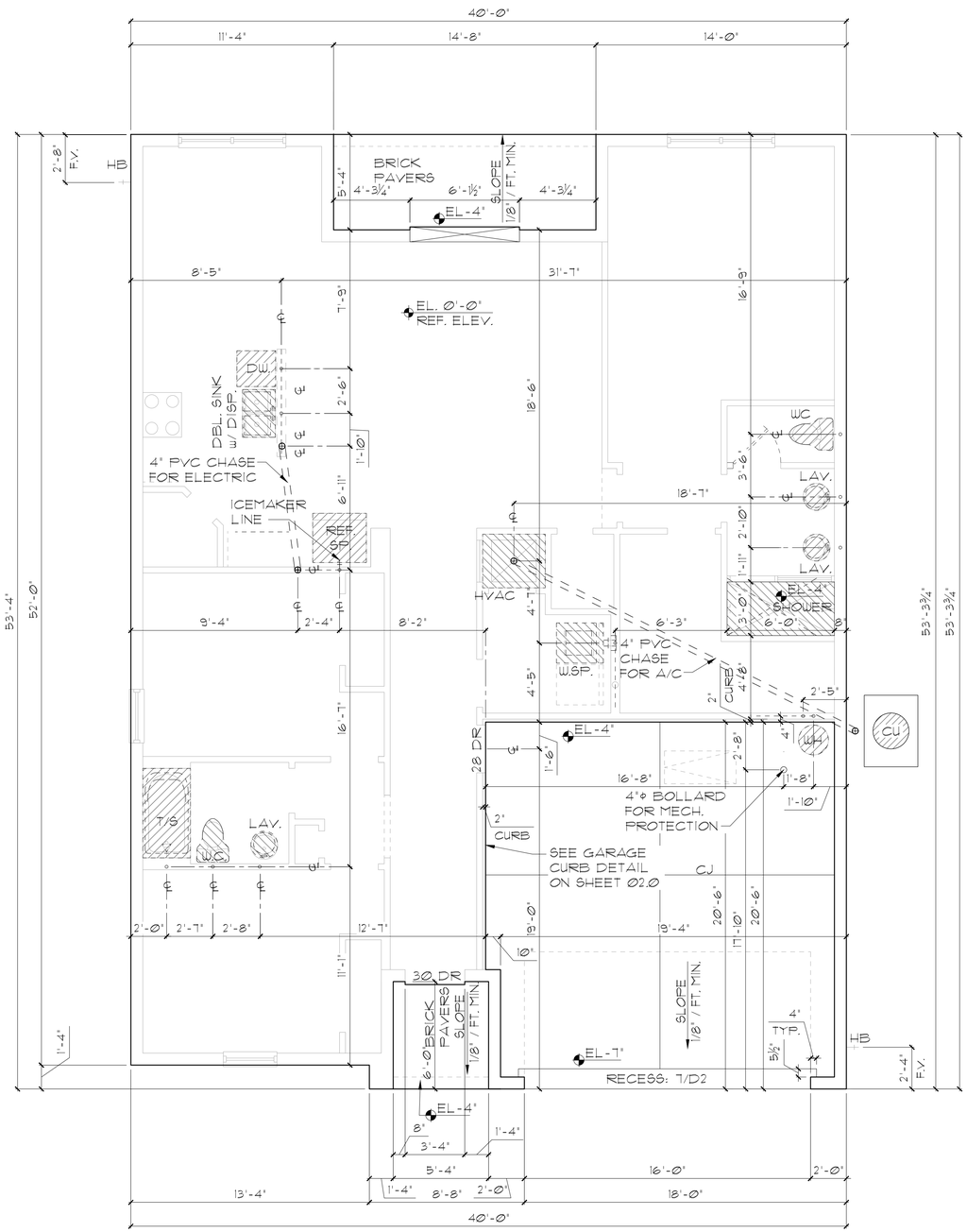


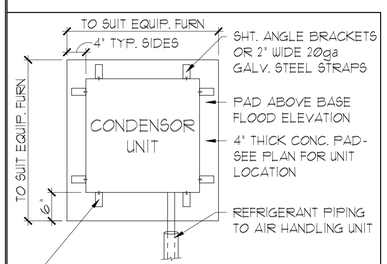


| ANCHOR SPACING TABLE | |
|---|---|
| LENGTH / SIDE | NO. OF ANCHOR/SIDES |
| LESS THAN 12" | ONE / SIDE |
| 12" - 24" | TWO / SIDE |
| 24" - 36" | THREE / SIDE |
| 36" UP & 5tons & UP | FOUR / SIDE |

1 COND. ANCHOR DET.
N.T.S.

# ELEVATION A,B,C STD
# SLAB INTERFACE PLAN

1/8"=1'-Ø" (11X17) 1/4"=1'-Ø" (22X34)

THIS STRUCTURE IS DESIGNED IN ACCORDANCE WITH THE 8th EDITION 2023 OF THE FLORIDA BUILDING CODE-RESIDENTIAL AND IS CERTIFIED AS SUCH

LOT: 0000, COMMUNITY

PARK SQUARE HOMES RESERVES COPYRIGHT & OTHER RIGHTS RESTRICTING THESE DOCUMENTS TO THE ORIGINAL SITE OR PURPOSE FOR WHICH THEY WERE PREPARED. REPRODUCTIONS, CHANGES OR ASSIGNMENTS ARE PROHIBITED.

Park Square HOMES
A DIVISION OF PARK SQUARE ENTERPRISES, INC.
5200 Vineland Road, Suite 200
Orlando, Florida 32811
Phone: (407) 529 - 3000

TEG
THOMPSON ENGINEERING GROUP, INC
4431 Vineland Road Suite A5 Orlando, FL 32811
Ph: (407) 734-1450
Fax: (407) 734-1789
www.tegpl.com

SLAB INTERFACE PLAN

1585 CRUSADE

40' EXPLORATION SERIES

| REVISIONS | |
|---|---|
| DELTA # | DATE |
| | |

DATE: 08-05-25

SCALE: AS NOTED

DRAWN: MJ

SHEET: 01.0

DISCLAIMER: CONTRACTOR/SUB-CONTRACTOR IS RESPONSIBLE TO REVIEW ALL INFORMATION CONTAINED HEREIN PRIOR TO COMMENCEMENT OF CONSTRUCTION. PARK SQUARE HOMES IS NOT RESPONSIBLE FOR ANY MISINTERPRETATIONS, ERRORS, OMISSIONS OR CUSTOM CHANGES MISSED AND NOT REPORTED PRIOR TO CONSTRUCTION. NO EXCEPTIONS.

## GENERAL NOTES

1. CONTRACTOR TO VERIFY ALL DIMENSIONS ON JOB SITE.
2. DO NOT SCALE PRINTS! CONSTRUCTION TO BE FROM CALCULATED DIMENSIONS ONLY. ANY DISCREPANCIES OR ERRORS TO BE REPORTED PROMPTLY TO SUPERVISOR FOR CLARIFICATION.
3. ALL INTERIOR FRAME WALL DIMENSIONS TO BE 3-1/2" UNLESS NOTED OTHERWISE.
4. ALL EXTERIOR BLOCK WALL DIMENSIONS TO BE 7-5/8" UNLESS NOTED OTHERWISE.
5. DOOR FROM HOUSE TO GARAGE MUST BE SOLID WOOD DOOR NO LESS THAN 1 3/8" IN THICKNESS, SOLID OR HONEYCOMB CORE STEEL DOORS NOT LESS THAN 1 3/8" THICK, OR 20 MIN. FIRE RATED IAW R302.5.1
6. GARAGE SHALL BE SEPARATED FROM THE RESIDENCE & ITS ATTIC AREA BY NOT LESS THAN 1/2" GYP. BD. APPLIED TO THE GAR. SIDE. PROVIDE 5/8" TYPE "X" GYP. BD. AT CEILING ONLY APPLIED PERPENDICULAR TO CEILING FRAME.
7. PULL ALL DIMENSIONS FROM THE REAR OF THE PLAN
8. SEE GENERAL NOTES PAGE FOR ADDITIONAL INFO.

## WALL LEGEND

DENOTES CONC. BLOCK WALL HGT. @ 8'-8" A.F.F.

DENOTES 2x INSULATED FRAME WALL

NOTE: SEE COLOR SHEET FOR FLOORING & INTERIOR DOOR HEIGHT REQUIREMENTS

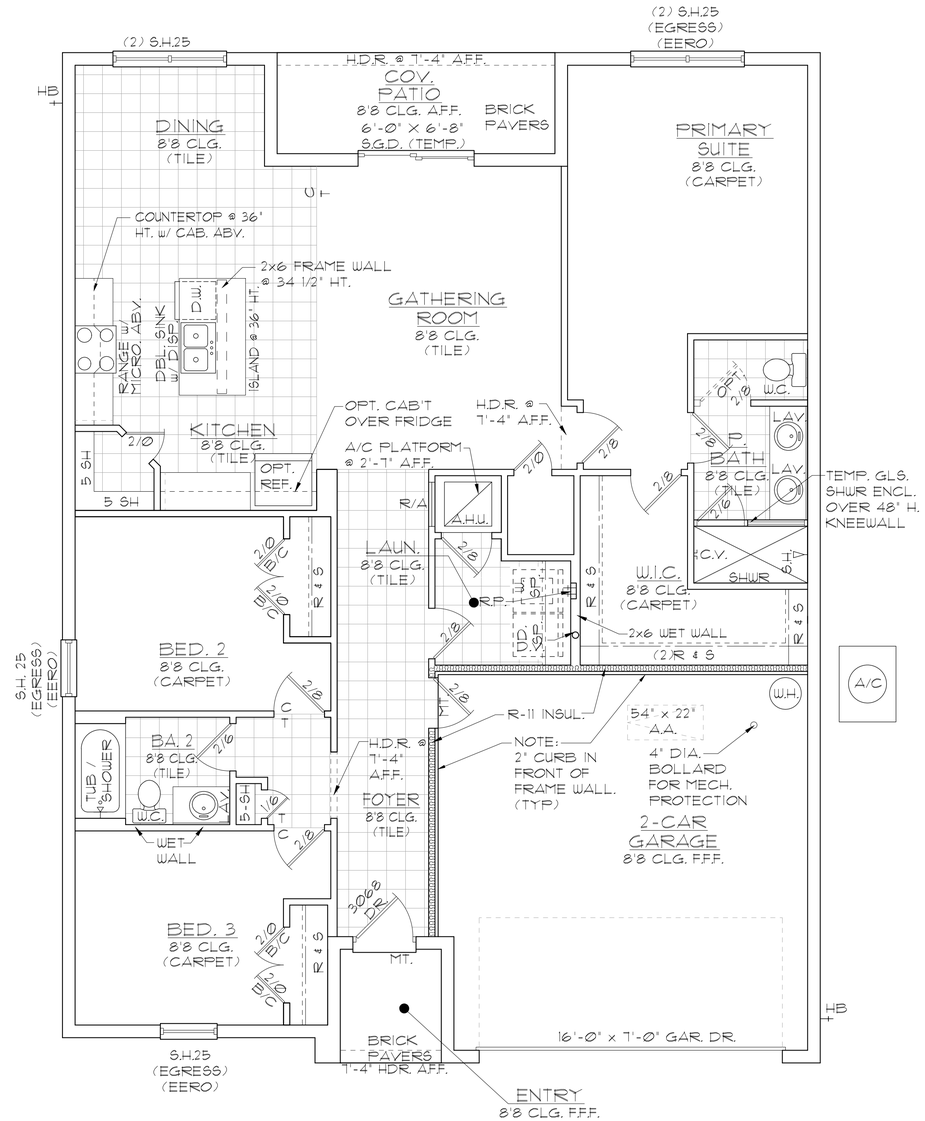


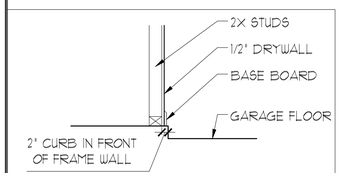


GARAGE CURB DETAIL

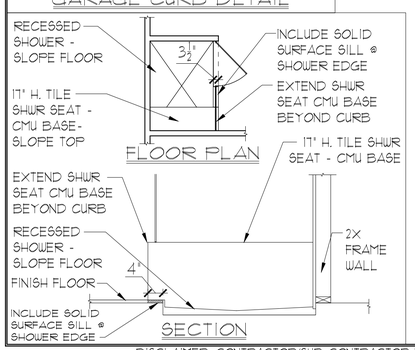


| AREA CALCULATIONS | |
|---|---|
| TOTAL LIVING | 1,585 SF. |
| GARAGE | 418 SF. |
| ENTRY | 35 SF. |
| LANAI | 78 SF. |
| TOTAL UNDER ROOF | 2,116 SF. |

ELEVATION A,B,C STD
FLOOR PLAN W/ NOTES

1/8"=1'-0" (11X17) 1/4"=1'-0" (22X34)

THIS STRUCTURE IS DESIGNED IN ACCORDANCE WITH THE 8th EDITION, 2023 OF THE FLORIDA BUILDING CODE-RESIDENTIAL AND IS CERTIFIED AS SUCH

LOT: 0000, COMMUNITY

PARK SQUARE HOMES RESERVES COPYRIGHT & OTHER RIGHTS RESTRICTING THESE DOCUMENTS TO THE ORIGINAL SITE OR PURPOSE FOR WHICH THEY WERE PREPARED. REPRODUCTIONS, CHANGES OR ASSIGNMENTS ARE PROHIBITED.

TEG
THOMPSON ENGINEERING GROUP, INC.
4401 Vineland Road Suite A5 Orlando, FL 32811
Ph: (407) 734-1450
Fax: (407) 734-1789
www.tegf.com

Park Square HOMES
A DIVISION OF PARK SQUARE ENTERPRISES, INC.
5200 Vineland Road, Suite 200
Orlando, Florida 32811
Phone: (407) 529 - 3000

FLOOR PLAN W/ NOTES

1585 CRUSADE

40' EXPLORATION SERIES

| REVISIONS | |
|---|---|
| DELTA # | DATE |
| | |

DATE: 09-05-25

SCALE: AS NOTED

DRAWN: MW

SHEET: 02.0

DISCLAIMER: CONTRACTOR/SUB-CONTRACTOR IS RESPONSIBLE TO REVIEW ALL INFORMATION CONTAINED HEREIN PRIOR TO COMMENCEMENT OF CONSTRUCTION. PARK SQUARE HOMES IS NOT RESPONSIBLE FOR ANY MISINTERPRETATIONS, ERRORS, OMISSIONS OR CUSTOM CHANGES MISSED AND NOT REPORTED PRIOR TO CONSTRUCTION. NO EXCEPTIONS.

## GENERAL NOTES

1. CONTRACTOR TO VERIFY ALL DIMENSIONS ON JOB SITE.
2. DO NOT SCALE PRINTS! CONSTRUCTION TO BE FROM CALCULATED DIMENSIONS ONLY. ANY DISCREPANCIES OR ERRORS TO BE REPORTED PROMPTLY TO SUPERVISOR FOR CLARIFICATION.
3. ALL INTERIOR FRAME WALL DIMENSIONS TO BE 3-1/2" UNLESS NOTED OTHERWISE.
4. ALL EXTERIOR BLOCK WALL DIMENSIONS TO BE 7-5/8" UNLESS NOTED OTHERWISE.
5. DOOR FROM HOUSE TO GARAGE MUST BE SOLID WOOD DOOR NO LESS THAN 1 3/8" IN THICKNESS, SOLID OR HONEYCOMB CORE STEEL DOORS NOT LESS THAN 1 3/8" THICK, OR 20 MIN. FIRE RATED IAW R302.5.1
6. GARAGE SHALL BE SEPARATED FROM THE RESIDENCE & ITS ATTIC AREA BY NOT LESS THAN 1/2" GYP. BD. APPLIED TO THE GAR. SIDE. PROVIDE 5/8" TYPE 'X' GYP. BD. AT CEILING ONLY APPLIED PERPENDICULAR TO CEILING FRAME.
7. PULL ALL DIMENSIONS FROM THE REAR OF THE PLAN
8. SEE GENERAL NOTES PAGE FOR ADDITIONAL INFO.

## WALL LEGEND

DENOTES CONC. BLOCK WALL HGT. @ 8'-8" A.F.F.

DENOTES 2x INSULATED FRAME WALL

NOTE: SEE COLOR SHEET FOR FLOORING & INTERIOR DOOR HEIGHT REQUIREMENTS

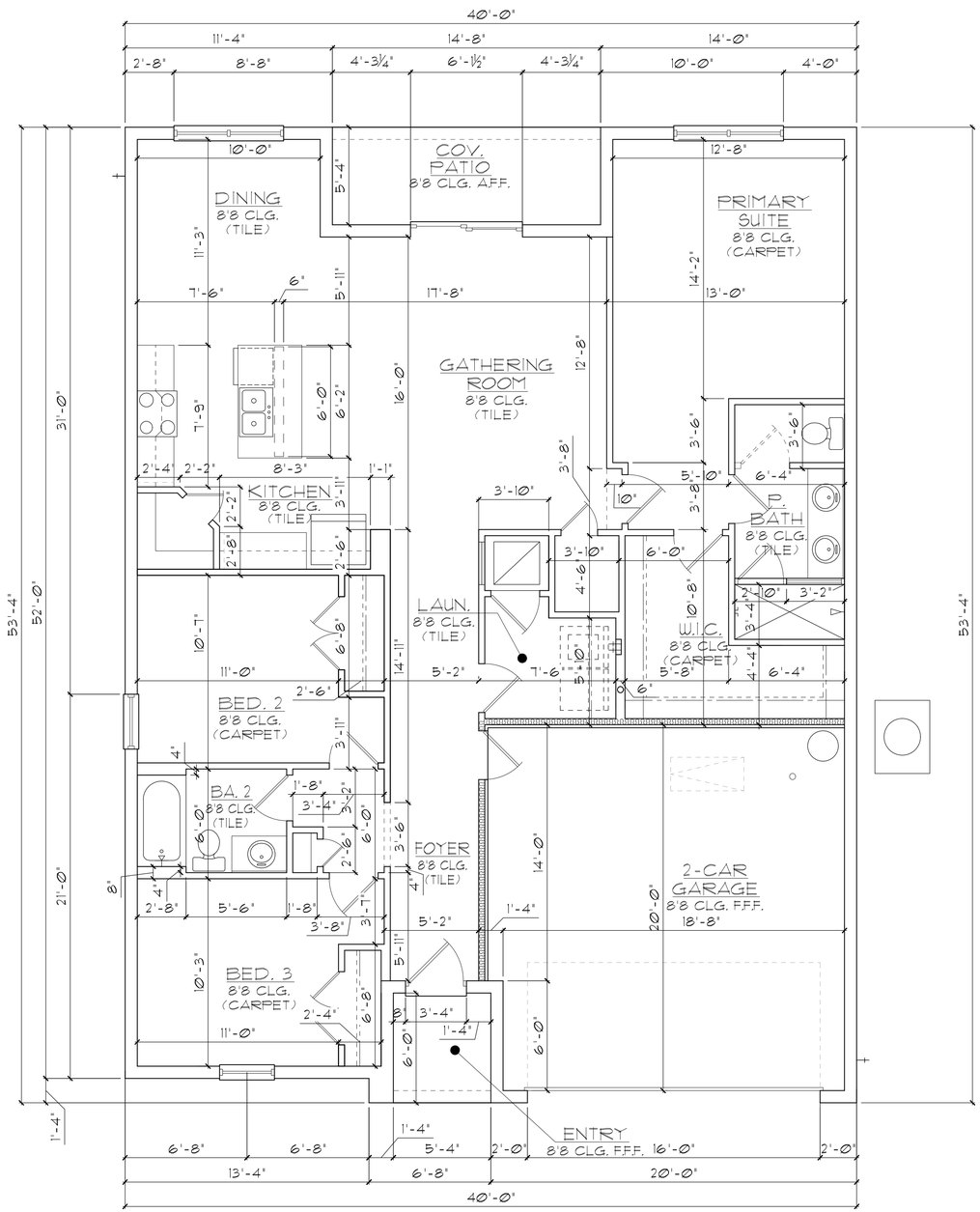


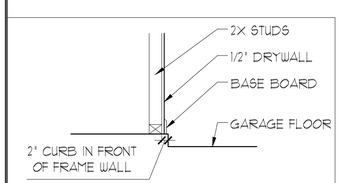


GARAGE CURB DETAIL

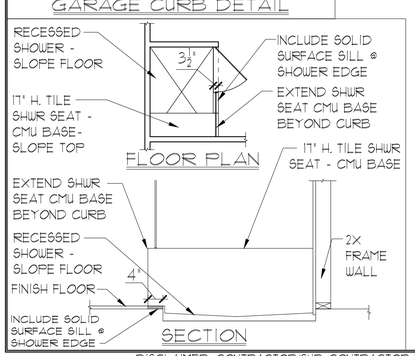


FLOOR PLAN

SECTION

| AREA CALCULATIONS | | |
|---|---|---|
| TOTAL LIVING | 1,585 | SF. |
| GARAGE | 418 | SF. |
| ENTRY | 35 | SF. |
| LANAI | 78 | SF. |
| TOTAL UNDER ROOF | 2,116 | SF. |

ELEVATION A,B,C STD
FLOOR PLAN W/ DIMENSIONS

1/8"=1'-0" (11X17) 1/4"=1'-0" (22X34)

THIS STRUCTURE IS DESIGNED IN ACCORDANCE WITH THE 8th EDITION, 2023 OF THE FLORIDA BUILDING CODE-RESIDENTIAL AND IS CERTIFIED AS SUCH

LOT: 0000, COMMUNITY

PARK SQUARE HOMES RESERVES COPYRIGHT & OTHER RIGHTS RESTRICTING THESE DOCUMENTS TO THE ORIGINAL SITE OR PURPOSE FOR WHICH THEY WERE PREPARED. REPRODUCTIONS, CHANGES OR ASSIGNMENTS ARE PROHIBITED.

Park Square HOMES
A DIVISION OF PARK SQUARE ENTERPRISES, INC.
5200 Vineland Road, Suite 200
Orlando, Florida 32811
Phone: (407) 529 - 3000

TEG
THOMPSON ENGINEERING GROUP, INC
4401 Vineland Road Suite A5 Orlando, FL 32811
Ph: (407) 734-1450
Fax: (407) 734-1789
www.tegf.com

FLOOR PLAN
W/ DIMENSIONS

1585 CRUSADE

40' EXPLORATION SERIES

| REVISIONS | |
|---|---|
| DELTA # | DATE |
| | |

DATE: 09-05-25

SCALE: AS NOTED

DRAWN: MW

SHEET: 02.1

DISCLAIMER: CONTRACTOR/SUB-CONTRACTOR IS RESPONSIBLE TO REVIEW ALL INFORMATION CONTAINED HEREIN PRIOR TO COMMENCEMENT OF CONSTRUCTION. PARK SQUARE HOMES IS NOT RESPONSIBLE FOR ANY MISINTERPRETATIONS, ERRORS, OMISSIONS OR CUSTOM CHANGES MISSED AND NOT REPORTED PRIOR TO CONSTRUCTION. NO EXCEPTIONS.

## EXTERIOR FINISH NOTES

1. LATH TO BE ATTACHED IAW R703.7.1 OF THE 8TH EDITION, FBC-R 2023 & ASTM C1063 OR C1787.
2. PLASTERING TO BE INSTALLED IAW R703.7 & R703.7.2 OF THE 8TH EDITION, FBC-R 2023
3. WEEP SCREED TO BE INSTALLED IAW R703.7.2.1 OF THE 8TH EDITION, FBC-R 2023 & ASTM C926.
4. WATER RESISTANT BARRIER TO BE INSTALLED IAW R703.2 & R703.7.3 OF THE 8TH EDITION, FBC-R 2023.
5. FLASHING TO BE INSTALLED IAW R703.4 OF THE 8TH EDITION, FBC-R 2023.
6. WIND RESISTANCE OF WALL COVERINGS & BACK MATERIALS SHALL BE IAW R703.1.2 OF THE 8TH EDITION, FBC-R 2023
7. ALL HORIZONTAL & VERTICAL CONTROL JOINTS SHALL BE INSTALLED IAW ASTM 1063.
8. ALL FIBER CEMENT SIDING SHALL BE IAW R703.1 OF THE 8TH EDITION, FBC-R 2023.
9. "ZIP SYSTEMS" WALL SHEATHING MAY BE USED AS AN ALTERNATIVE FOR WALL SHEATHING AND VAPOR BARRIER, ON EXTERIOR FRAME WALLS.
10. SEE GENERAL NOTES PAGE FOR ADDITIONAL INFORMATION.

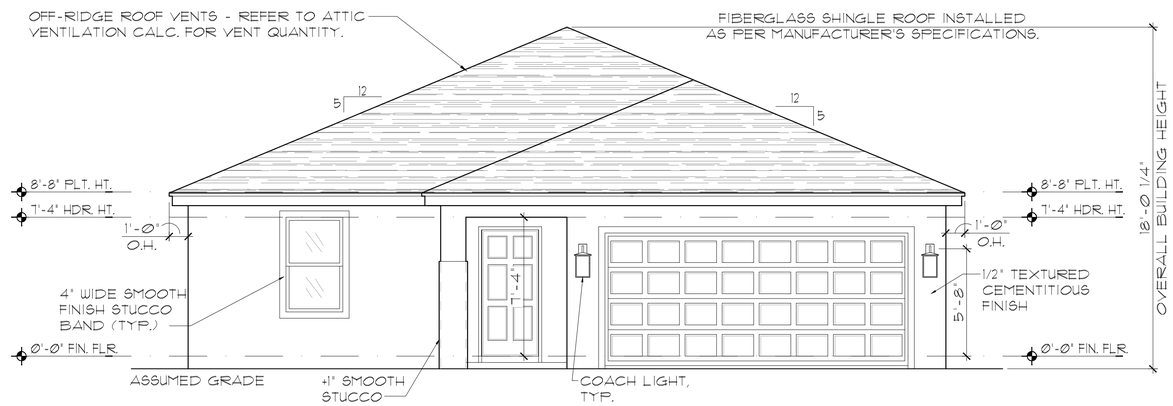


ELEVATION A STD
FRONT ELEVATION
1/8"=1'-0" (11X17) 1/4"=1'-0" (22X34)

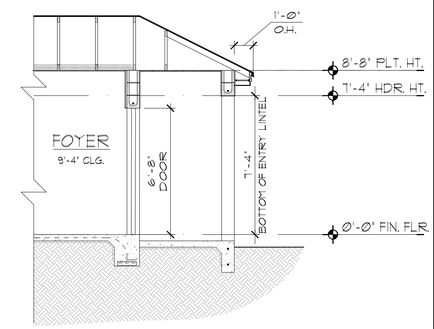


1 ENTRY DETAIL
1/4"=1'-0" (22X34)

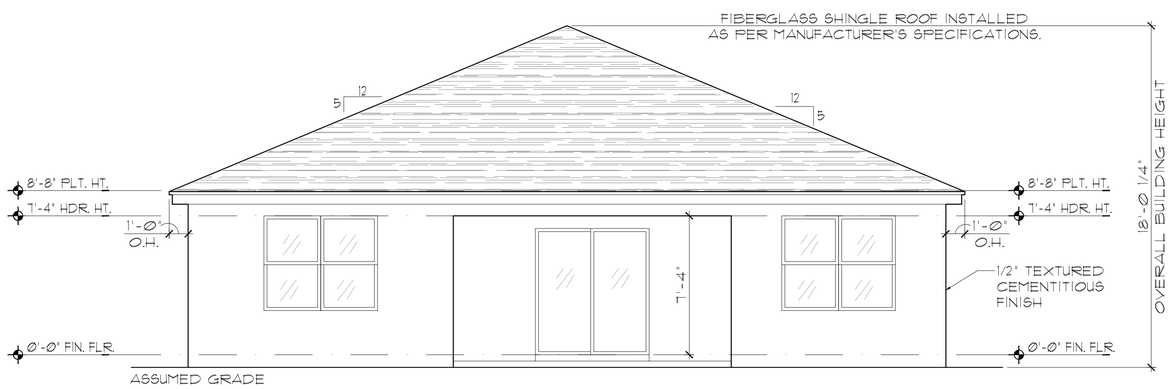


ELEVATION A STD
REAR ELEVATION
1/8"=1'-0" (11X17) 1/4"=1'-0" (22X34)

THIS STRUCTURE IS DESIGNED IN ACCORDANCE WITH THE 8th EDITION, 2023 OF THE FLORIDA BUILDING CODE-RESIDENTIAL AND IS CERTIFIED AS SUCH

LOT: 0000, COMMUNITY

PARK SQUARE HOMES RESERVES COPYRIGHT & OTHER RIGHTS RESTRICTING THESE DOCUMENTS TO THE ORIGINAL SITE OR PURPOSE FOR WHICH THEY WERE PREPARED. REPRODUCTIONS, CHANGES OR ASSIGNMENTS ARE PROHIBITED.

TEG
THOMPSON ENGINEERING GROUP, INC.
4401 Vineland Road Suite A5 Orlando, FL 32811
Ph: (407) 734-1450
Fax: (407) 734-1789
www.tegf.com

Park Square HOMES
A DIVISION OF PARK SQUARE ENTERPRISES, INC.
5200 Vineland Road, Suite 200
Orlando, Florida 32811
Phone: (407) 529 - 3000

EXTERIOR ELEVATION
FRONT AND REAR

1585 CRUSADE

40' EXPLORATION SERIES

| REVISIONS | |
|---|---|
| DELTA # | DATE |
| | |

DATE: 09-05-25
SCALE: AS NOTED
DRAWN: MW
SHEET: 03.A

DISCLAIMER: CONTRACTOR/SUB-CONTRACTOR IS RESPONSIBLE TO REVIEW ALL INFORMATION CONTAINED HEREIN PRIOR TO COMMENCEMENT OF CONSTRUCTION. PARK SQUARE HOMES IS NOT RESPONSIBLE FOR ANY MISINTERPRETATIONS, ERRORS, OMISSIONS OR CUSTOM CHANGES MISSED AND NOT REPORTED PRIOR TO CONSTRUCTION. NO EXCEPTIONS.

## EXTERIOR FINISH NOTES

1. LATH TO BE ATTACHED IAW R703.7.1 OF THE 8TH EDITION, FBC-R 2023 & ASTM C1063 OR C1787.
2. PLASTERING TO BE INSTALLED IAW R703.7 & R703.7.2 OF THE 8TH EDITION, FBC-R 2023
3. WEEP SCREED TO BE INSTALLED IAW R703.7.2.1 OF THE 8TH EDITION, FBC-R 2023 & ASTM C926.
4. WATER RESISTANT BARRIER TO BE INSTALLED IAW R703.2 & R703.7.3 OF THE 8TH EDITION, FBC-R 2023.
5. FLASHING TO BE INSTALLED IAW R703.4 OF THE 8TH EDITION, FBC-R 2023.
6. WIND RESISTANCE OF WALL COVERINGS & BACK MATERIALS SHALL BE IAW R703.1.2 OF THE 8TH EDITION, FBC-R 2023
7. ALL HORIZONTAL & VERTICAL CONTROL JOINTS SHALL BE INSTALLED IAW ASTM 1063.
8. ALL FIBER CEMENT SIDING SHALL BE IAW R703.1 OF THE 8TH EDITION, FBC-R 2023.
9. "ZIP SYSTEMS" WALL SHEATHING MAY BE USED AS AN ALTERNATIVE FOR WALL SHEATHING AND VAPOR BARRIER, ON EXTERIOR FRAME WALLS.
10. SEE GENERAL NOTES PAGE FOR ADDITIONAL INFORMATION.

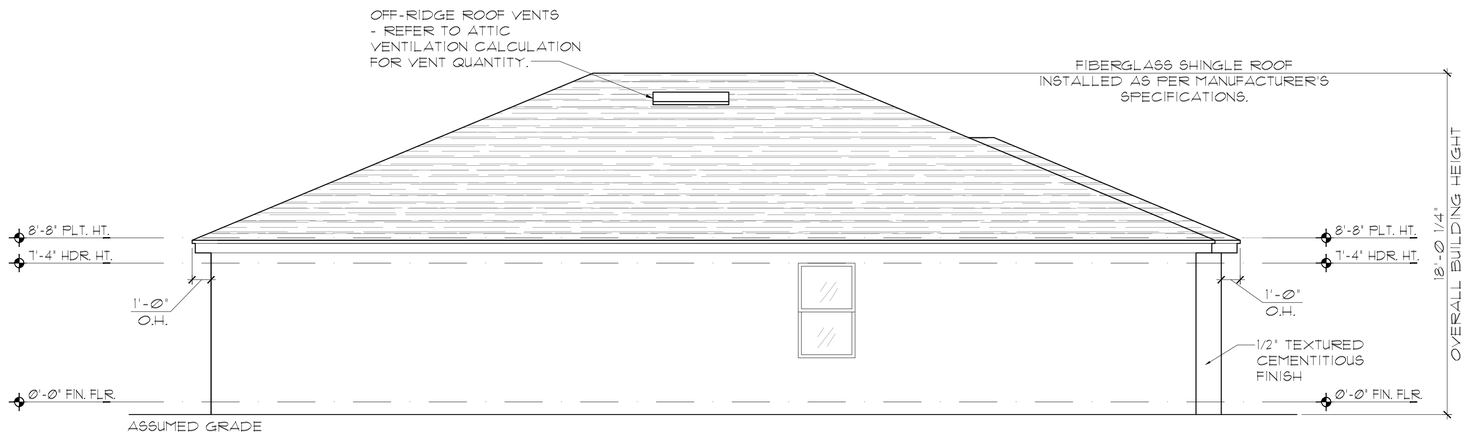


ELEVATION A STD
LEFT ELEVATION
1/8"=1'-0" (11X17) 1/4"=1'-0" (22X34)

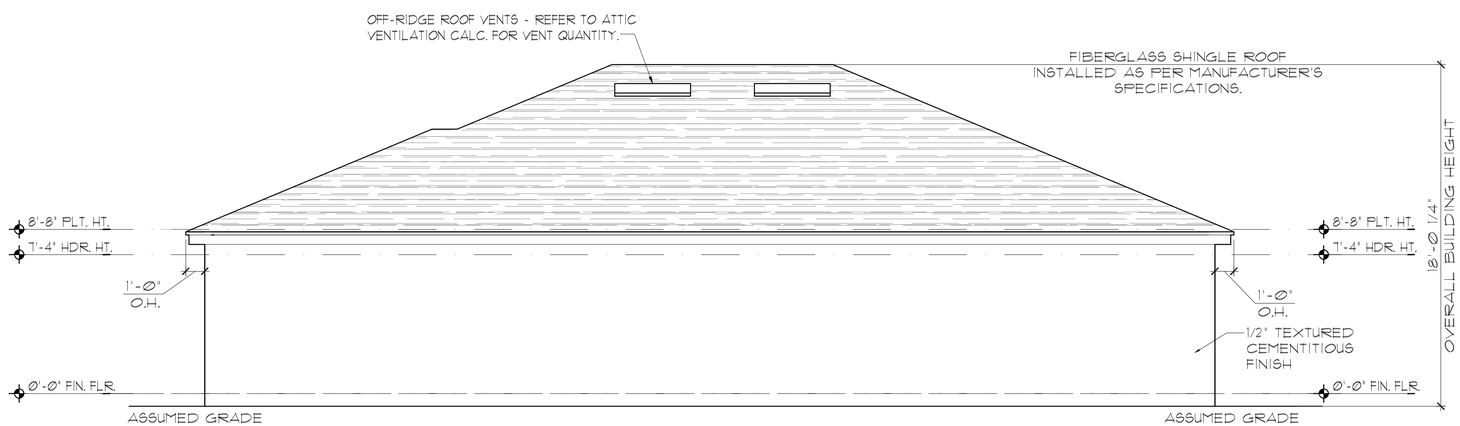


ELEVATION A STD
RIGHT ELEVATION
1/8"=1'-0" (11X17) 1/4"=1'-0" (22X34)

THIS STRUCTURE IS DESIGNED IN ACCORDANCE WITH THE 8th EDITION, 2023 OF THE FLORIDA BUILDING CODE-RESIDENTIAL AND IS CERTIFIED AS SUCH

LOT: 0000, COMMUNITY

PARK SQUARE HOMES RESERVES COPYRIGHT & OTHER RIGHTS RESTRICTING THESE DOCUMENTS TO THE ORIGINAL SITE OR PURPOSE FOR WHICH THEY WERE PREPARED. REPRODUCTIONS, CHANGES OR ASSIGNMENTS ARE PROHIBITED.

Park Square HOMES
A DIVISION OF PARK SQUARE ENTERPRISES, INC.
5200 Vineland Road, Suite 200
Orlando, Florida 32811
Phone: (407) 529 - 3000

TEG
THOMPSON ENGINEERING GROUP, INC.
4401 Vineland Road Suite A1 Orlando, FL 32811
Ph: (407) 734-1450
Fax: (407) 734-1790
www.teg1.com

EXTERIOR ELEVATION
LEFT AND RIGHT

1585 CRUSADE

40' EXPLORATION SERIES

| REVISIONS | |
|---|---|
| DELTA # | DATE |
| | |

DATE: 09-05-25
SCALE: AS NOTED
DRAWN: MW
SHEET: 03.1A

DISCLAIMER: CONTRACTOR/SUB-CONTRACTOR IS RESPONSIBLE TO REVIEW ALL INFORMATION CONTAINED HEREIN PRIOR TO COMMENCEMENT OF CONSTRUCTION. PARK SQUARE HOMES IS NOT RESPONSIBLE FOR ANY MISINTERPRETATIONS, ERRORS, OMISSIONS OR CUSTOM CHANGES MISSED AND NOT REPORTED PRIOR TO CONSTRUCTION. NO EXCEPTIONS.

## EXTERIOR FINISH NOTES

1. LATH TO BE ATTACHED IAW R703.7.1 OF THE 8TH EDITION, FBC-R, 2023 & ASTM C1063 OR C1787.
2. PLASTERING TO BE INSTALLED IAW R703.7 & R703.7.2 OF THE 8TH EDITION, FBC-R, 2023
3. WEEP SCREED TO BE INSTALLED IAW R703.7.2.1 OF THE 8TH EDITION, FBC-R, 2023 & ASTM C926.
4. WATER RESISTANT BARRIER TO BE INSTALLED IAW R703.2 & R703.7.3 OF THE 8TH EDITION, FBC-R, 2023.
5. FLASHING TO BE INSTALLED IAW R703.4 OF THE 8TH EDITION, FBC-R 2023.
6. WIND RESISTANCE OF WALL COVERINGS & BACK MATERIALS SHALL BE IAW R703.1.2 OF THE 8TH EDITION, FBC-R, 2023
7. ALL HORIZONTAL & VERTICAL CONTROL JOINTS SHALL BE INSTALLED IAW ASTM 1063.
8. ALL FIBER CEMENT SIDING SHALL BE IAW R703.1 OF THE 8TH EDITION, FBC-R, 2023.
9. "ZIP SYSTEMS" WALL SHEATHING MAY BE USED AS AN ALTERNATIVE FOR WALL SHEATHING AND VAPOR BARRIER, ON EXTERIOR FRAME WALLS.
10. SEE GENERAL NOTES PAGE FOR ADDITIONAL INFORMATION.

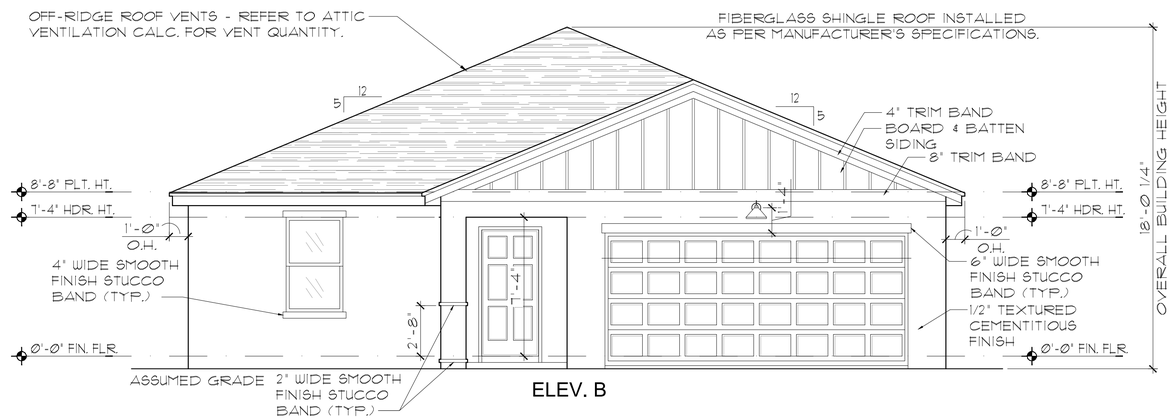


ELEV. B

## ELEVATION B STD FRONT ELEVATION

1/8"=1'-0" (11X17) 1/4"=1'-0" (22X34)

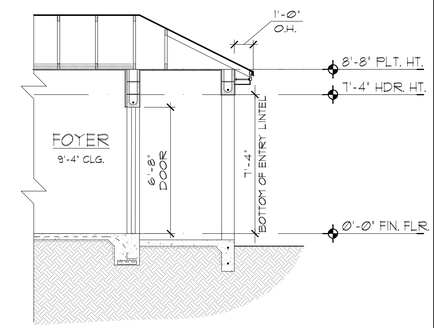


1 ENTRY DETAIL

1/4"=1'-0" (22X34)

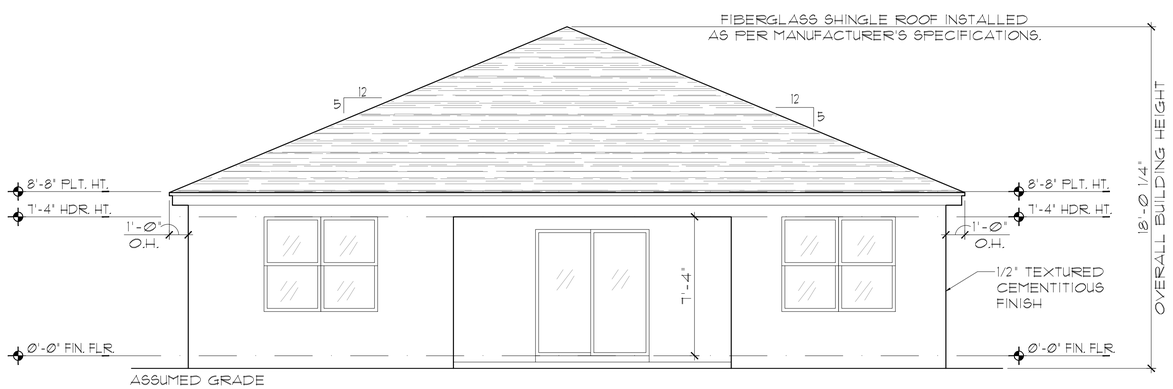


## ELEVATION B STD REAR ELEVATION

1/8"=1'-0" (11X17) 1/4"=1'-0" (22X34)

THIS STRUCTURE IS DESIGNED IN ACCORDANCE WITH THE 8th EDITION, 2023 OF THE FLORIDA BUILDING CODE-RESIDENTIAL AND IS CERTIFIED AS SUCH

PARK SQUARE HOMES RESERVES COPYRIGHT & OTHER RIGHTS RESTRICTING THESE DOCUMENTS TO THE ORIGINAL SITE OR PURPOSE FOR WHICH THEY WERE PREPARED. REPRODUCTIONS, CHANGES OR ASSIGNMENTS ARE PROHIBITED.

LOT: 0000, COMMUNITY

TEG
THOMPSON ENGINEERING GROUP, INC.
4431 Vineland Road Suite A5 Orlando, FL 32811
Ph: (407) 734-1450
Fax: (407) 734-1456
www.tegf.com

Park Square HOMES
A DIVISION OF PARK SQUARE ENTERPRISES, INC.
5200 Vineland Road, Suite 200
Orlando, Florida 32811
Phone: (407) 529 - 3000

EXTERIOR ELEVATION
FRONT AND REAR

1585 CRUSADE

40' EXPLORATION SERIES

| REVISIONS | |
|---|---|
| DELTA # | DATE |
| | |

DATE: 09-05-25

SCALE: AS NOTED

DRAWN: MW

SHEET: 03.B

DISCLAIMER: CONTRACTOR/SUB-CONTRACTOR IS RESPONSIBLE TO REVIEW ALL INFORMATION CONTAINED HEREIN PRIOR TO COMMENCEMENT OF CONSTRUCTION. PARK SQUARE HOMES IS NOT RESPONSIBLE FOR ANY MISINTERPRETATIONS, ERRORS, OMISSIONS OR CUSTOM CHANGES MISSED AND NOT REPORTED PRIOR TO CONSTRUCTION. NO EXCEPTIONS.

## EXTERIOR FINISH NOTES

1. LATH TO BE ATTACHED IAW R703.7.1 OF THE 8TH EDITION, FBC-R, 2023 & ASTM C1063 OR C1787.
2. PLASTERING TO BE INSTALLED IAW R703.7 & R703.7.2 OF THE 8TH EDITION, FBC-R, 2023
3. WEEP SCREED TO BE INSTALLED IAW R703.7.2.1 OF THE 8TH EDITION, FBC-R, 2023 & ASTM C926.
4. WATER RESISTANT BARRIER TO BE INSTALLED IAW R703.2 & R703.7.3 OF THE 8TH EDITION, FBC-R, 2023.
5. FLASHING TO BE INSTALLED IAW R703.4 OF THE 8TH EDITION, FBC-R 2023.
6. WIND RESISTANCE OF WALL COVERINGS & BACK MATERIALS SHALL BE IAW R703.1.2 OF THE 8TH EDITION, FBC-R, 2023
7. ALL HORIZONTAL & VERTICAL CONTROL JOINTS SHALL BE INSTALLED IAW ASTM 1063.
8. ALL FIBER CEMENT SIDING SHALL BE IAW R703.1 OF THE 8TH EDITION, FBC-R, 2023.
9. "ZIP SYSTEMS" WALL SHEATHING MAY BE USED AS AN ALTERNATIVE FOR WALL SHEATHING AND VAPOR BARRIER, ON EXTERIOR FRAME WALLS.
10. SEE GENERAL NOTES PAGE FOR ADDITIONAL INFORMATION.

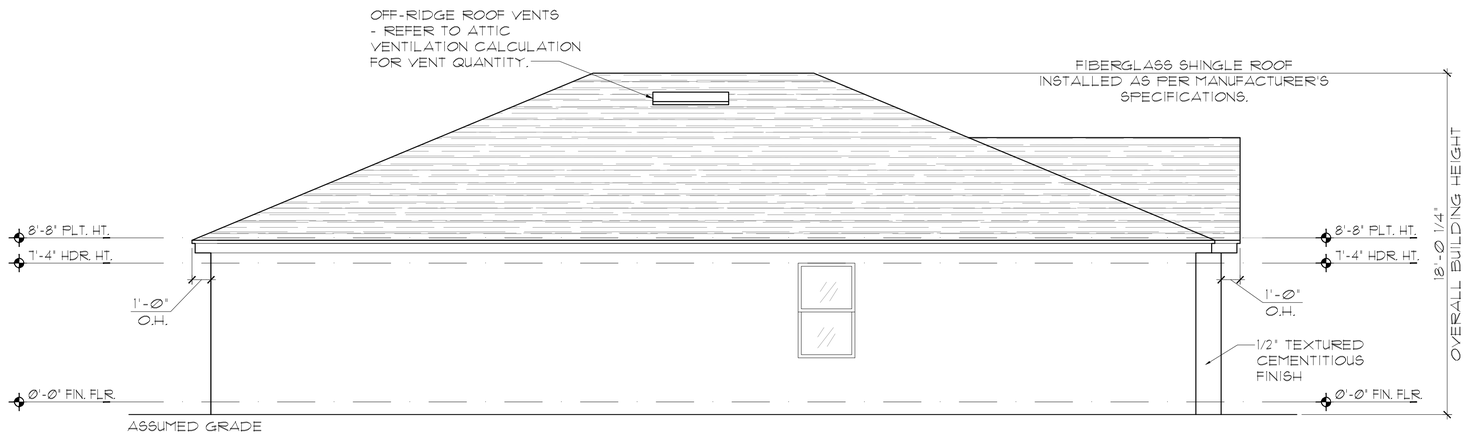


ELEVATION B STD
LEFT ELEVATION
1/8"=1'-0" (11X17) 1/4"=1'-0" (22X34)

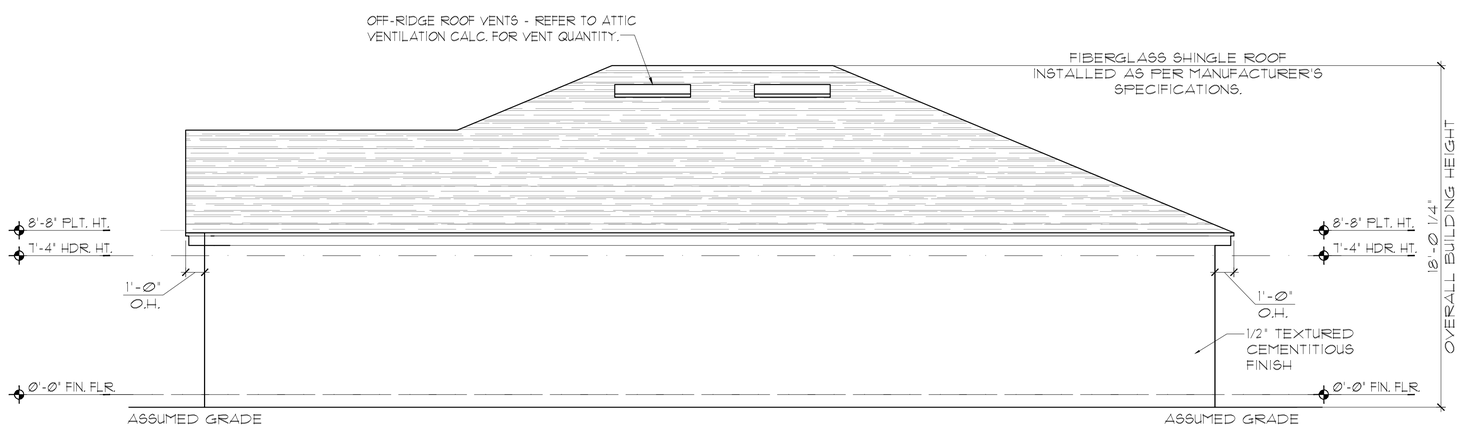


ELEVATION B STD
RIGHT ELEVATION
1/8"=1'-0" (11X17) 1/4"=1'-0" (22X34)

THIS STRUCTURE IS DESIGNED IN ACCORDANCE WITH THE 8th EDITION, 2023 OF THE FLORIDA BUILDING CODE-RESIDENTIAL AND IS CERTIFIED AS SUCH

LOT: 0000, COMMUNITY

PARK SQUARE HOMES RESERVES COPYRIGHT & OTHER RIGHTS RESTRICTING THESE DOCUMENTS TO THE ORIGINAL SITE OR PURPOSE FOR WHICH THEY WERE PREPARED. REPRODUCTIONS, CHANGES OR ASSIGNMENTS ARE PROHIBITED.

TEG
THOMPSON ENGINEERING GROUP, INC.
4400 Vineland Road Suite 40 Orlando, FL 32811
Ph: (407) 734-1450
Fax: (407) 734-1790
www.teg1.com

Park Square HOMES
A DIVISION OF PARK SQUARE ENTERPRISES, INC.
5200 Vineland Road, Suite 200
Orlando, Florida 32811
Phone: (407) 529 - 3000

EXTERIOR ELEVATION
LEFT AND RIGHT

1585 CRUSADE

40' EXPLORATION SERIES

| REVISIONS | |
|---|---|
| DELTA # | DATE |
| | |

DATE: 09-05-25
SCALE: AS NOTED
DRAWN: MW
SHEET: 03.1B

DISCLAIMER: CONTRACTOR/SUB-CONTRACTOR IS RESPONSIBLE TO REVIEW ALL INFORMATION CONTAINED HEREIN PRIOR TO COMMENCEMENT OF CONSTRUCTION. PARK SQUARE HOMES IS NOT RESPONSIBLE FOR ANY MISINTERPRETATIONS, ERRORS, OMISSIONS OR CUSTOM CHANGES MISSED AND NOT REPORTED PRIOR TO CONSTRUCTION. NO EXCEPTIONS.

## EXTERIOR FINISH NOTES

1. LATH TO BE ATTACHED IAW R703.7.1 OF THE 8TH EDITION, FBC-R, 2023 & ASTM C1063 OR C1787.
2. PLASTERING TO BE INSTALLED IAW R703.7 & R703.7.2 OF THE 8TH EDITION, FBC-R, 2023
3. WEEP SCREED TO BE INSTALLED IAW R703.7.2.1 OF THE 8TH EDITION, FBC-R, 2023 & ASTM C926.
4. WATER RESISTANT BARRIER TO BE INSTALLED IAW R703.2 & R703.7.3 OF THE 8TH EDITION, FBC-R 2023.
5. FLASHING TO BE INSTALLED IAW R703.4 OF THE 8TH EDITION, FBC-R 2023.
6. WIND RESISTANCE OF WALL COVERINGS & BACK MATERIALS SHALL BE IAW R703.1.2 OF THE 8TH EDITION, FBC-R, 2023
7. ALL HORIZONTAL & VERTICAL CONTROL JOINTS SHALL BE INSTALLED IAW ASTM 1063.
8. ALL FIBER CEMENT SIDING SHALL BE IAW R703.1 OF THE 8TH EDITION, FBC-R, 2023.
9. "ZIP SYSTEMS" WALL SHEATHING MAY BE USED AS AN ALTERNATIVE FOR WALL SHEATHING AND VAPOR BARRIER, ON EXTERIOR FRAME WALLS.
10. SEE GENERAL NOTES PAGE FOR ADDITIONAL INFORMATION.

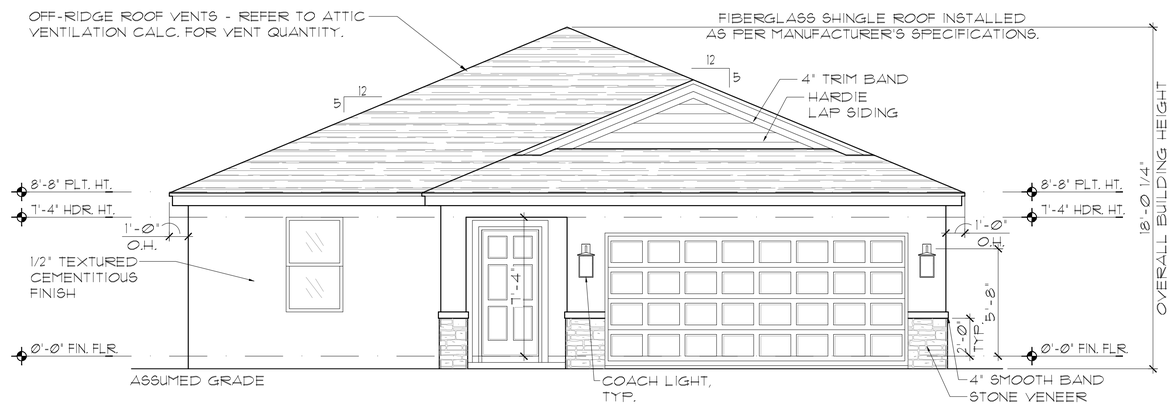


ELEVATION C STD
FRONT ELEVATION
1/8"=1'-0" (11X17) 1/4"=1'-0" (22X34)

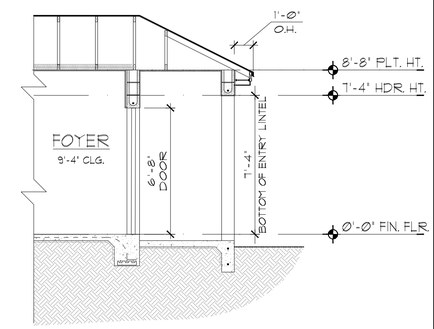


1 ENTRY DETAIL
1/4"=1'-0" (22X34)

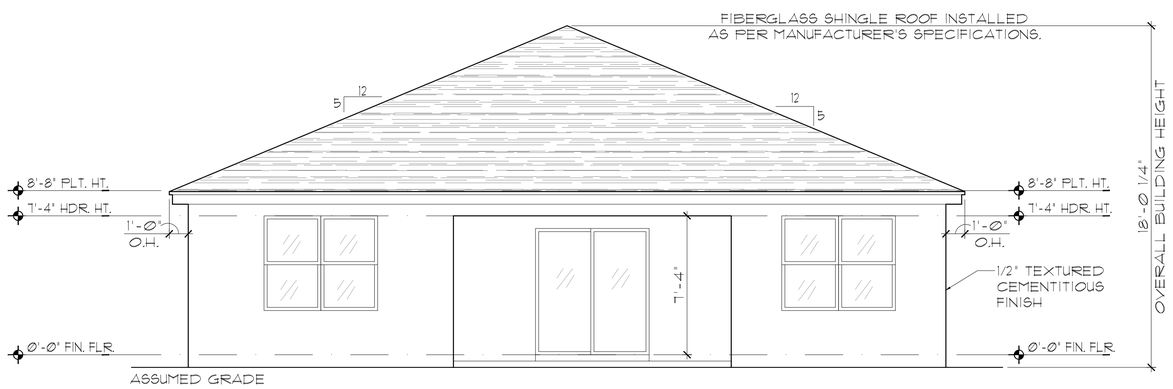


ELEVATION C STD
REAR ELEVATION
1/8"=1'-0" (11X17) 1/4"=1'-0" (22X34)

THIS STRUCTURE IS DESIGNED IN ACCORDANCE WITH THE 8th EDITION, 2023 OF THE FLORIDA BUILDING CODE-RESIDENTIAL AND IS CERTIFIED AS SUCH

PARK SQUARE HOMES RESERVES COPYRIGHT & OTHER RIGHTS RESTRICTING THESE DOCUMENTS TO THE ORIGINAL SITE OR PURPOSE FOR WHICH THEY WERE PREPARED. REPRODUCTIONS, CHANGES OR ASSIGNMENTS ARE PROHIBITED.

LOT: 0000, COMMUNITY

TEG
THOMPSON ENGINEERING GROUP, INC
4431 Vineland Road Suite A5 Orlando, FL 32811
Ph: (407) 734-1450
Fax: (407) 734-1789
www.tegf.com

Park Square HOMES
A DIVISION OF PARK SQUARE ENTERPRISES, INC.
5200 Vineland Road, Suite 200
Orlando, Florida 32811
Phone: (407) 529 - 3000

EXTERIOR ELEVATION
FRONT AND REAR

1585 CRUSADE

40' EXPLORATION SERIES

| REVISIONS | |
|---|---|
| DELTA # | DATE |
| | |

DATE: 09-05-25
SCALE: AS NOTED
DRAWN: MW
SHEET: 03.C

DISCLAIMER: CONTRACTOR/SUB-CONTRACTOR IS RESPONSIBLE TO REVIEW ALL INFORMATION CONTAINED HEREIN PRIOR TO COMMENCEMENT OF CONSTRUCTION. PARK SQUARE HOMES IS NOT RESPONSIBLE FOR ANY MISINTERPRETATIONS, ERRORS, OMISSIONS OR CUSTOM CHANGES MISSED AND NOT REPORTED PRIOR TO CONSTRUCTION. NO EXCEPTIONS.

## EXTERIOR FINISH NOTES

1. LATH TO BE ATTACHED IAW R703.7.1 OF THE 8TH EDITION, FBC-R 2023 & ASTM C1063 OR C1787.
2. PLASTERING TO BE INSTALLED IAW R703.7 & R703.7.2 OF THE 8TH EDITION, FBC-R 2023
3. WEEP SCREED TO BE INSTALLED IAW R703.7.2.1 OF THE 8TH EDITION, FBC-R 2023 & ASTM C926.
4. WATER RESISTANT BARRIER TO BE INSTALLED IAW R703.2 & R703.7.3 OF THE 8TH EDITION, FBC-R 2023.
5. FLASHING TO BE INSTALLED IAW R703.4 OF THE 8TH EDITION, FBC-R 2023.
6. WIND RESISTANCE OF WALL COVERINGS & BACK MATERIALS SHALL BE IAW R703.1.2 OF THE 8TH EDITION, FBC-R 2023
7. ALL HORIZONTAL & VERTICAL CONTROL JOINTS SHALL BE INSTALLED IAW ASTM 1063.
8. ALL FIBER CEMENT SIDING SHALL BE IAW R703.1 OF THE 8TH EDITION, FBC-R 2023.
9. "ZIP SYSTEMS" WALL SHEATHING MAY BE USED AS AN ALTERNATIVE FOR WALL SHEATHING AND VAPOR BARRIER, ON EXTERIOR FRAME WALLS.
10. SEE GENERAL NOTES PAGE FOR ADDITIONAL INFORMATION.

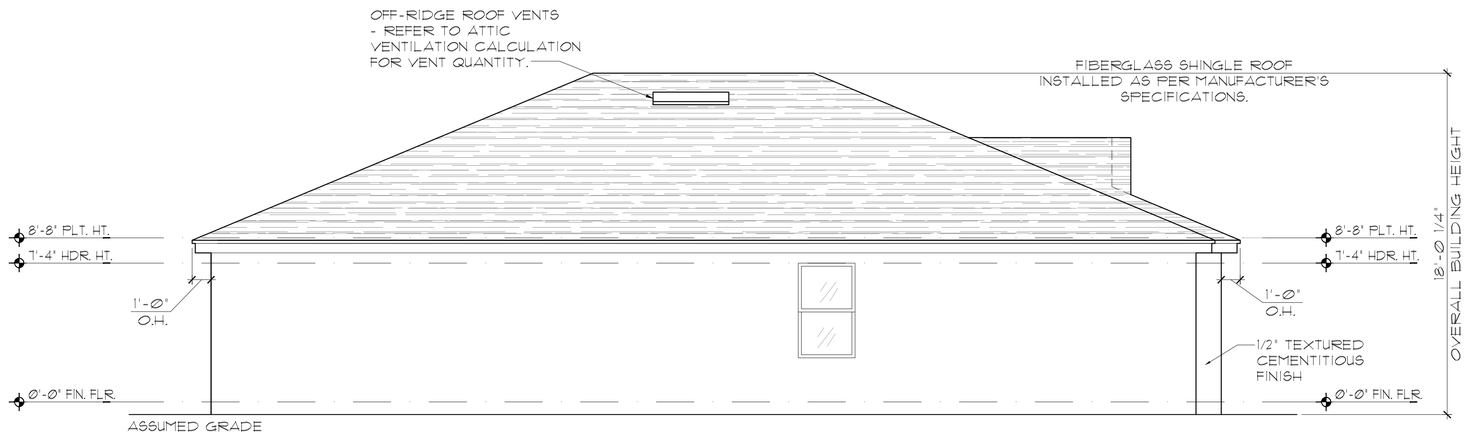


ELEVATION C STD
LEFT ELEVATION
1/8"=1'-0" (11X17) 1/4"=1'-0" (22X34)

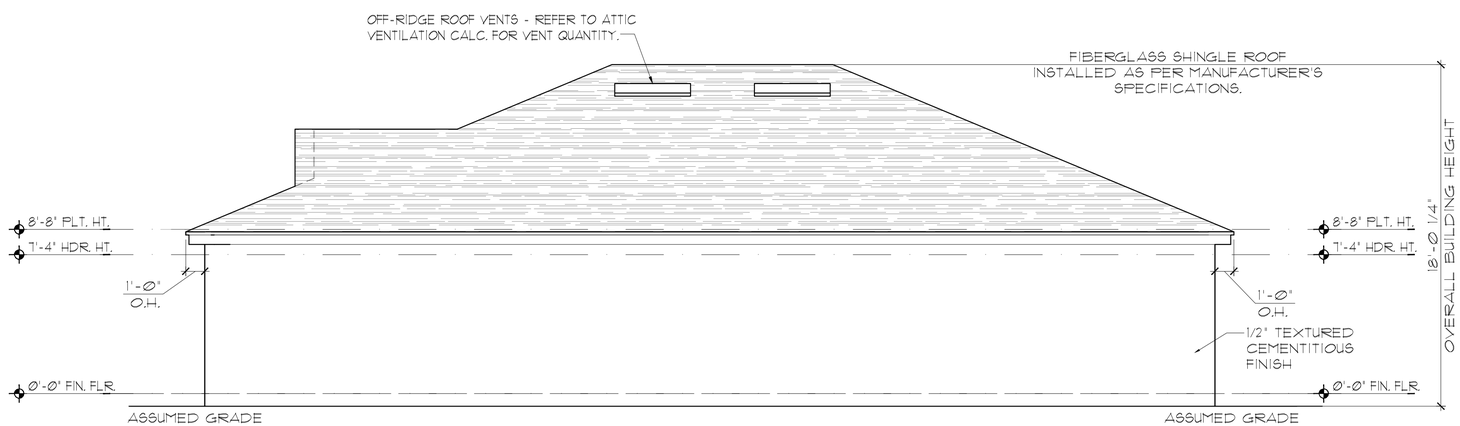


ELEVATION C STD
RIGHT ELEVATION
1/8"=1'-0" (11X17) 1/4"=1'-0" (22X34)

THIS STRUCTURE IS DESIGNED IN ACCORDANCE WITH THE 8th EDITION, 2023 OF THE FLORIDA BUILDING CODE-RESIDENTIAL AND IS CERTIFIED AS SUCH

LOT: 0000, COMMUNITY

PARK SQUARE HOMES RESERVES COPYRIGHT & OTHER RIGHTS RESTRICTING THESE DOCUMENTS TO THE ORIGINAL SITE OR PURPOSE FOR WHICH THEY WERE PREPARED. REPRODUCTIONS, CHANGES OR ASSIGNMENTS ARE PROHIBITED.

Park Square HOMES
A DIVISION OF PARK SQUARE ENTERPRISES, INC.
5200 Vineland Road, Suite 200
Orlando, Florida 32811
Phone: (407) 529 - 3000

TEG
THOMPSON ENGINEERING GROUP, INC.
4401 Vineland Road Suite A1 Orlando, FL 32811
Ph: (407) 734-1450
Fax: (407) 734-1790
www.teg1.com

EXTERIOR ELEVATION
LEFT AND RIGHT

1585 CRUSADE

40' EXPLORATION SERIES

| REVISIONS | |
|---|---|
| DELTA # | DATE |
| | |

DATE: 09-05-25
SCALE: AS NOTED
DRAWN: MW
SHEET: 03.1C

DISCLAIMER: CONTRACTOR/SUB-CONTRACTOR IS RESPONSIBLE TO REVIEW ALL INFORMATION CONTAINED HEREIN PRIOR TO COMMENCEMENT OF CONSTRUCTION. PARK SQUARE HOMES IS NOT RESPONSIBLE FOR ANY MISINTERPRETATIONS, ERRORS, OMISSIONS OR CUSTOM CHANGES MISSED AND NOT REPORTED PRIOR TO CONSTRUCTION. NO EXCEPTIONS.

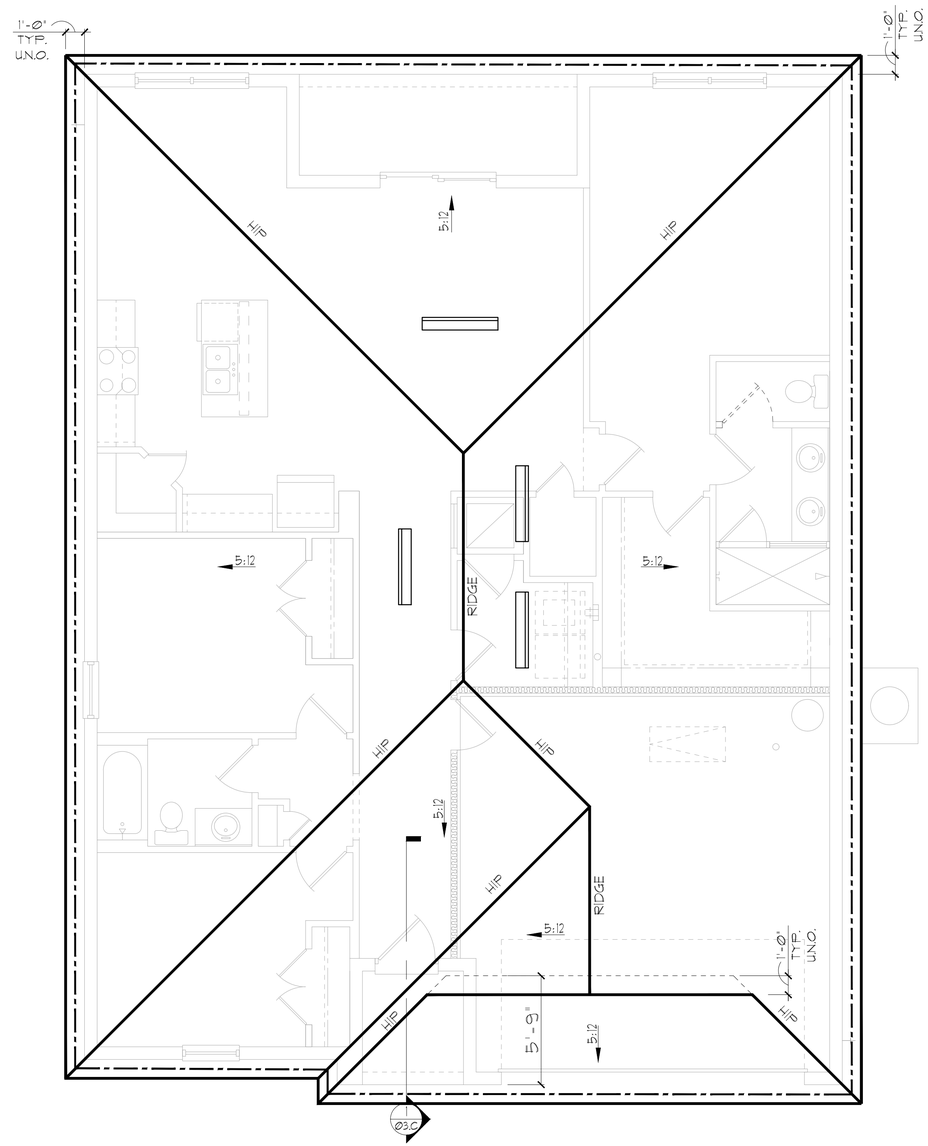


## GENERAL NOTES

ENCLOSED ATTIC SPACES AND ENCLOSED RAFTER SPACES FORMED WHERE CEILINGS ARE APPLIED DIRECTLY TO THE UNDERSIDE OF ROOF RAFTERS SHALL HAVE CROSS VENTILATION FOR EACH SEPARATE SPACE BY VENTILATING OPENINGS PROTECTED AGAINST THE ENTRANCE OF RAIN OR SNOW. MINIMUM NET FREE VENTILATING AREA SHALL NOT BE LESS THAN 1/150 OF THE AREA OF THE VENTED SPACE, *(EXCEPT THAT THE REDUCTION OF THE TOTAL AREA TO 1/300 IS PERMITTED, PROVIDED THAT AT LEAST 40% AND NOT MORE THAN 50% OF THE REQUIRED VENTILATING AREA IS PROVIDED BY VENTILATORS LOCATED IN THE UPPER PORTION OF THE SPACE TO BE VENTILATED AT NO MORE THAN 3 FEET BELOW THE RIDGE OR HIGHEST POINT OF SPACE, MEASURED VERTICALLY, WITH THE BALANCE OF THE REQUIRED VENTILATION PROVIDED BY EAVE OR CORNICE VENTS.)

1. PLAN SHOWS APPROXIMATE VENT LOCATIONS AND STILL REQUIRES REVIEW BY THE BUILDER/G.C. TO VERIFY ALL VENTING COMPONENTS ARE INSTALLED PER THE MIN. REQUIREMENTS AS STATED IN THE CURRENT EDITION OF THE FBC(R) SECTION R806 AND ALL SUBSEQUENT SUB-SECTIONS.

2. WHERE EAVE OR CORNICE VENTS ARE INSTALLED, PROVIDE BAFFLES TO MAINTAIN A MIN. 1" AIRSPACE BETWEEN INSULATION AND ROOF SHEATHING AND AT THE LOCATION OF THE VENT.

3. VENTILATION OPENINGS SHALL HAVE A LEAST DIMENSIONS OF 1/16" MIN. AND 1/4" MAX. VENTILATION OPENINGS HAVING A LEAST DIMENSION GREATER THAN 1/4" SHALL BE PROVIDED WITH AN APPROVED CORROSION PROTECTIVE COVER HAVING A LEAST DIMENSIONS OF 1/16" AND 1/4" MAXIMUM.

4. ALL VENTS SHALL BE INSTALLED PER THE MANUFACTURER'S WRITTEN SPECIFICATIONS (FREE FROM BLOCKAGES AND/OR OBSTRUCTIONS) PROVIDING ADEQUATE CROSS VENTILATION.

5. THE BUILDER/ROOFING CONTRACTOR SHALL BE RESPONSIBLE TO VERIFY ALL CALCULATIONS AND QUANTITIES OF REQUIRED VENTILATORS PRIOR TO INSTALLATION.

6. ROOF PLAN DEPICTED IS NOT INTENDED TO SERVE AS A TRUSS DESIGN

7. SEE BUILDING SECTIONS, WALL SECTIONS & ELEVATIONS FOR BEARING HEIGHTS

CALCULATIONS BELOW ARE BASED OFF OF THE FOLLOWING ASSUMPTIONS:

OFF RIDGE VENTS TO HAVE A NET FREE VENTILATION AREA OF:

TILE: O'HAGIN- MODEL-'S'= 97.5 SQ. INCHES PER VENT INSTALLED

SHINGLE: MILLENIUM METALS-MMI-2= 80.5 SQ. INCHES PER VENT INSTALLED
LOMANCO-770D = 140 SQ. INCHES PER VENT INSTALLED

INDICATES POSSIBLE LOCATION OF OFF RIDGE VENTS

SOFFIT VENTILATION TO HAVE A NET FREE VENTILATION AREA OF 10 SQ. INCHES PER LINEAR FOOT

INDICATES POSSIBLE LOCATION OF SOFFIT VENTING

## ATTIC VENTILATION CALCULATIONS

NET FREE VENTILATED AREA(S):

(O'HAGIN- MODEL 'S')
NFVA = 1,585 SQ. FT * 144 / 300 = 304-380 SQ. IN. REQUIRED (40%-50%)

(4) OFF RIDGE VENTS @ 97.5 SQ. IN. (O'HAGIN- MODEL 'S') = 390 SQ. IN. PROVIDED

(MILLENIUM METALS- MMI-2)
NFVA = 1,585 SQ. FT * 144 / 300 = 304-380 SQ. IN. REQUIRED (40%-50%)

(5) OFF RIDGE VENTS @ 80.5 SQ. IN. (MILLENIUM METALS- MMI-2) = 402 SQ. IN. PROVIDED

(LOMANCO-770D)
NFVA = 1,585 SQ. FT * 144 / 300 = 304-380 SQ. IN. REQUIRED (40%-50%)

(3) OFF RIDGE VENTS @ 140 SQ. IN. (LOMANCO-770D) = 420 SQ. IN. PROVIDED

+/- 200 LINEAR FEET OF VENTED SOFFIT.

ELEVATION C STD

ROOF PLAN

1/8"=1'-0" (11X17) 1/4"=1'-0" (22X34)

THIS STRUCTURE IS DESIGNED IN ACCORDANCE WITH THE 8th EDITION, 2023 OF THE FLORIDA BUILDING CODE-RESIDENTIAL AND IS CERTIFIED AS SUCH

LOT: 0000, COMMUNITY

PARK SQUARE HOMES RESERVES COPYRIGHT & OTHER RIGHTS RESTRICTING THESE DOCUMENTS TO THE ORIGINAL SITE OR PURPOSE FOR WHICH THEY WERE PREPARED. REPRODUCTIONS, CHANGES OR ASSIGNMENTS ARE PROHIBITED.

Park Square HOMES
A DIVISION OF PARK SQUARE ENTERPRISES, INC.
5200 Vineland Road, Suite 200
Orlando, Florida 32811
Phone: (407) 529 - 3000

TEG
THOMPSON ENGINEERING GROUP, INC.
4401 Vineland Road Suite A1 Orlando, FL 32811
Ph: (407) 734-1450
Fax: (407) 734-1790
www.tegfl.com

ROOF PLAN

1585 CRUSADE

40' EXPLORATION SERIES

| REVISIONS | |
|---|---|
| DELTA # | DATE |
| | |

DATE: 09-05-25

SCALE: AS NOTED

DRAWN: MW

SHEET: 04.C

DISCLAIMER: CONTRACTOR/SUB-CONTRACTOR IS RESPONSIBLE TO REVIEW ALL INFORMATION CONTAINED HEREIN PRIOR TO COMMENCEMENT OF CONSTRUCTION. PARK SQUARE HOMES IS NOT RESPONSIBLE FOR ANY MISINTERPRETATIONS, ERRORS, OMISSIONS OR CUSTOM CHANGES MISSED AND NOT REPORTED PRIOR TO CONSTRUCTION. NO EXCEPTIONS.

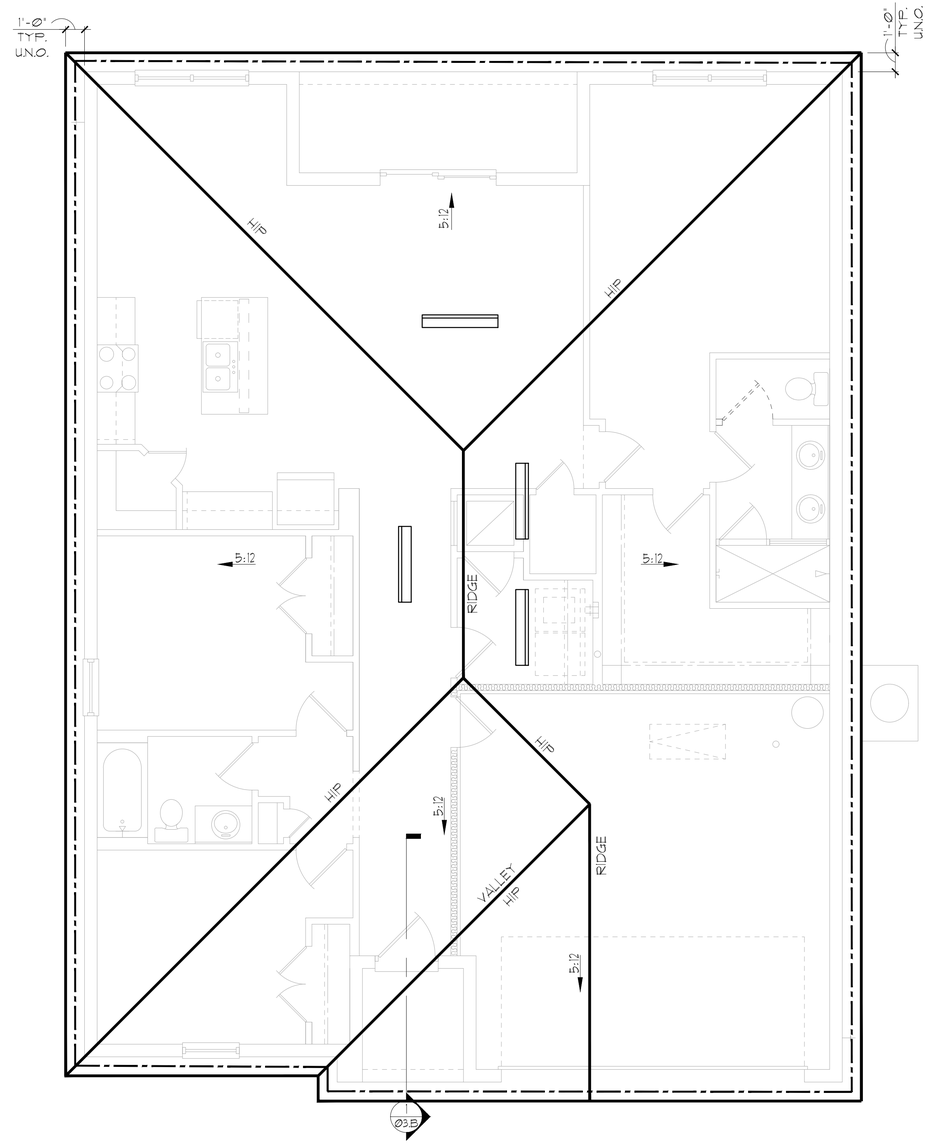


## GENERAL NOTES

ENCLOSED ATTIC SPACES AND ENCLOSED RAFTER SPACES FORMED WHERE CEILINGS ARE APPLIED DIRECTLY TO THE UNDERSIDE OF ROOF RAFTERS SHALL HAVE CROSS VENTILATION FOR EACH SEPARATE SPACE BY VENTILATING OPENINGS PROTECTED AGAINST THE ENTRANCE OF RAIN OR SNOW. MINIMUM NET FREE VENTILATING AREA SHALL NOT BE LESS THAN 1/150 OF THE AREA OF THE VENTED SPACE, *(EXCEPT THAT THE REDUCTION OF THE TOTAL AREA TO 1/300 IS PERMITTED, PROVIDED THAT AT LEAST 40% AND NOT MORE THAN 50% OF THE REQUIRED VENTILATING AREA IS PROVIDED BY VENTILATORS LOCATED IN THE UPPER PORTION OF THE SPACE TO BE VENTILATED AT NO MORE THAN 3 FEET BELOW THE RIDGE OR HIGHEST POINT OF SPACE, MEASURED VERTICALLY, WITH THE BALANCE OF THE REQUIRED VENTILATION PROVIDED BY EAVE OR CORNICE VENTS.)

1. PLAN SHOWS APPROXIMATE VENT LOCATIONS AND STILL REQUIRES REVIEW BY THE BUILDER/G.C. TO VERIFY ALL VENTING COMPONENTS ARE INSTALLED PER THE MIN. REQUIREMENTS AS STATED IN THE CURRENT EDITION OF THE FBC(R) SECTION R806 AND ALL SUBSEQUENT SUB-SECTIONS.

2. WHERE EAVE OR CORNICE VENTS ARE INSTALLED, PROVIDE BAFFLES TO MAINTAIN A MIN. 1" AIRSPACE BETWEEN INSULATION AND ROOF SHEATHING AND AT THE LOCATION OF THE VENT.

3. VENTILATION OPENINGS SHALL HAVE A LEAST DIMENSIONS OF 1/16" MIN. AND 1/4" MAX. VENTILATION OPENINGS HAVING A LEAST DIMENSION GREATER THAN 1/4" SHALL BE PROVIDED WITH AN APPROVED CORROSION PROTECTIVE COVER HAVING A LEAST DIMENSIONS OF 1/16" AND 1/4" MAXIMUM.

4. ALL VENTS SHALL BE INSTALLED PER THE MANUFACTURER'S WRITTEN SPECIFICATIONS (FREE FROM BLOCKAGES AND/OR OBSTRUCTIONS) PROVIDING ADEQUATE CROSS VENTILATION.

5. THE BUILDER/ROOFING CONTRACTOR SHALL BE RESPONSIBLE TO VERIFY ALL CALCULATIONS AND QUANTITIES OF REQUIRED VENTILATORS PRIOR TO INSTALLATION.

6. ROOF PLAN DEPICTED IS NOT INTENDED TO SERVE AS A TRUSS DESIGN

7. SEE BUILDING SECTIONS, WALL SECTIONS & ELEVATIONS FOR BEARING HEIGHTS

CALCULATIONS BELOW ARE BASED OFF OF THE FOLLOWING ASSUMPTIONS:

OFF RIDGE VENTS TO HAVE A NET FREE VENTILATION AREA OF:

TILE: O'HAGIN- MODEL -'S' = 97.5 SQ. INCHES PER VENT INSTALLED

SHINGLE: MILLENIUM METALS-MMI-2 = 80.5 SQ. INCHES PER VENT INSTALLED
LOMANCO-770D = 140 SQ. INCHES PER VENT INSTALLED

INDICATES POSSIBLE LOCATION OF OFF RIDGE VENTS

SOFFIT VENTILATION TO HAVE A NET FREE VENTILATION AREA OF 10 SQ. INCHES PER LINEAR FOOT

INDICATES POSSIBLE LOCATION OF SOFFIT VENTING

## ATTIC VENTILATION CALCULATIONS

NET FREE VENTILATED AREA(S):

(O'HAGIN- MODEL 'S')
NFVA = 1,585 SQ. FT * 144 / 300 = 304-380 SQ. IN. REQUIRED (40%-50%)

(4) OFF RIDGE VENTS @ 97.5 SQ. IN. (O'HAGIN- MODEL 'S') = 390 SQ. IN. PROVIDED

(MILLENIUM METALS- MMI-2)
NFVA = 1,585 SQ. FT * 144 / 300 = 304-380 SQ. IN. REQUIRED (40%-50%)

(5) OFF RIDGE VENTS @ 80.5 SQ. IN. (MILLENIUM METALS- MMI-2) = 402 SQ. IN. PROVIDED

(LOMANCO-770D)
NFVA = 1,585 SQ. FT * 144 / 300 = 304-380 SQ. IN. REQUIRED (40%-50%)

(3) OFF RIDGE VENTS @ 140 SQ. IN. (LOMANCO-770D) = 420 SQ. IN. PROVIDED

+/- 200 LINEAR FEET OF VENTED SOFFIT.

ELEVATION B STD
ROOF PLAN
1/8"=1'-0" (11X17) 1/4"=1'-0" (22X34)

THIS STRUCTURE IS DESIGNED IN ACCORDANCE WITH THE 8th EDITION, 2023 OF THE FLORIDA BUILDING CODE-RESIDENTIAL AND IS CERTIFIED AS SUCH

LOT: 0000, COMMUNITY

PARK SQUARE HOMES RESERVES COPYRIGHT & OTHER RIGHTS RESTRICTING THESE DOCUMENTS TO THE ORIGINAL SITE OR PURPOSE FOR WHICH THEY WERE PREPARED. REPRODUCTIONS, CHANGES OR ASSIGNMENTS ARE PROHIBITED.

Park Square HOMES
A DIVISION OF PARK SQUARE ENTERPRISES, INC.
5200 Vineland Road, Suite 200
Orlando, Florida 32811
Phone: (407) 529 - 3000

TEG
THOMPSON ENGINEERING GROUP, INC.
4401 Vineland Road Suite A1 Orlando, FL 32811
Ph: (407) 734-1450
Fax: (407) 734-1790
www.tegfl.com

ROOF PLAN

1585 CRUSADE
40' EXPLORATION SERIES

| REVISIONS | |
|---|---|
| DELTA # | DATE |
| | |

DATE: 09-05-25
SCALE: AS NOTED
DRAWN: MW
SHEET: 04B

DISCLAIMER: CONTRACTOR/SUB-CONTRACTOR IS RESPONSIBLE TO REVIEW ALL INFORMATION CONTAINED HEREIN PRIOR TO COMMENCEMENT OF CONSTRUCTION. PARK SQUARE HOMES IS NOT RESPONSIBLE FOR ANY MISINTERPRETATIONS, ERRORS, OMISSIONS OR CUSTOM CHANGES MISSED AND NOT REPORTED PRIOR TO CONSTRUCTION. NO EXCEPTIONS.

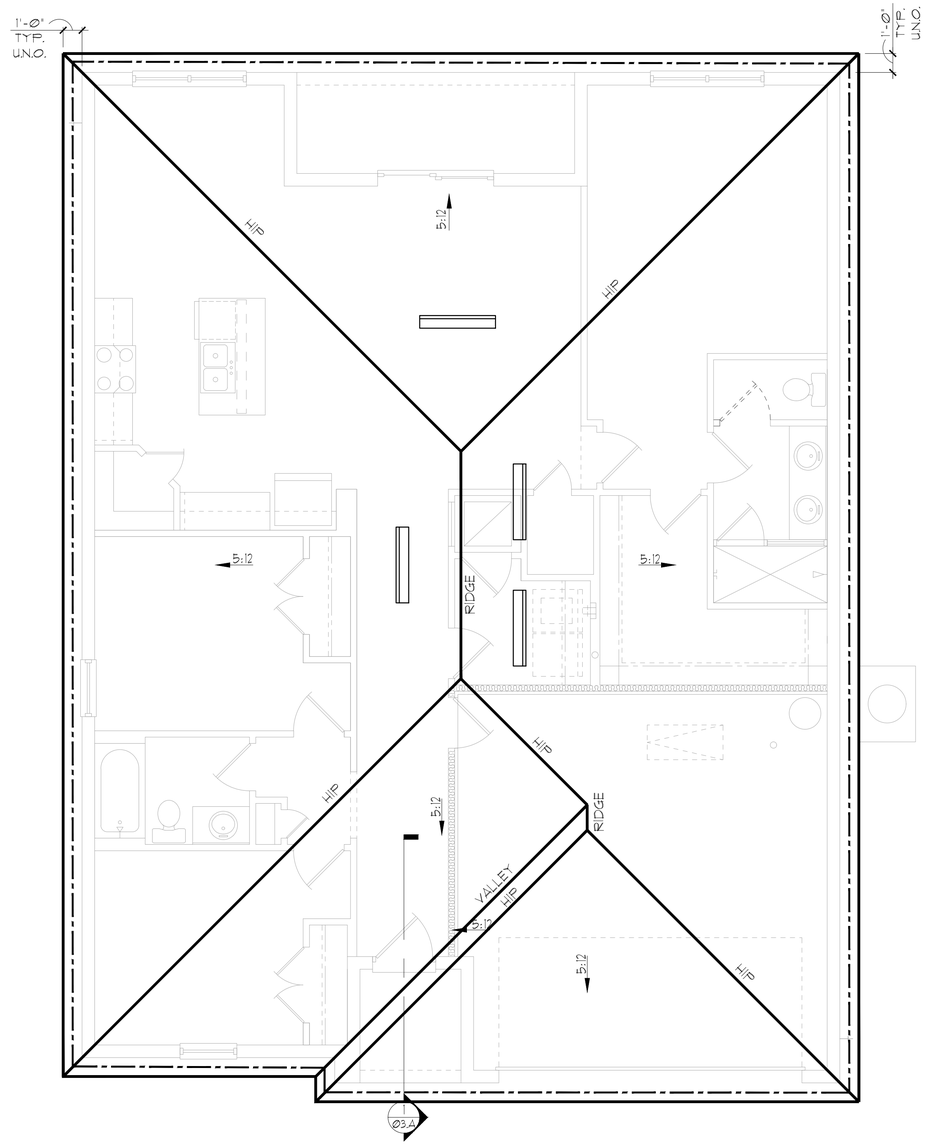


## GENERAL NOTES

ENCLOSED ATTIC SPACES AND ENCLOSED RAFTER SPACES FORMED WHERE CEILINGS ARE APPLIED DIRECTLY TO THE UNDERSIDE OF ROOF RAFTERS SHALL HAVE CROSS VENTILATION FOR EACH SEPARATE SPACE BY VENTILATING OPENINGS PROTECTED AGAINST THE ENTRANCE OF RAIN OR SNOW. MINIMUM NET FREE VENTILATING AREA SHALL NOT BE LESS THAN 1/150 OF THE AREA OF THE VENTED SPACE, *(EXCEPT THAT THE REDUCTION OF THE TOTAL AREA TO 1/300 IS PERMITTED, PROVIDED THAT AT LEAST 40% AND NOT MORE THAN 50% OF THE REQUIRED VENTILATING AREA IS PROVIDED BY VENTILATORS LOCATED IN THE UPPER PORTION OF THE SPACE TO BE VENTILATED AT NO MORE THAN 3 FEET BELOW THE RIDGE OR HIGHEST POINT OF SPACE, MEASURED VERTICALLY, WITH THE BALANCE OF THE REQUIRED VENTILATION PROVIDED BY EAVE OR CORNICE VENTS.)

1. PLAN SHOWS APPROXIMATE VENT LOCATIONS AND STILL REQUIRES REVIEW BY THE BUILDER/G.C. TO VERIFY ALL VENTING COMPONENTS ARE INSTALLED PER THE MIN. REQUIREMENTS AS STATED IN THE CURRENT EDITION OF THE FBC(R) SECTION R806 AND ALL SUBSEQUENT SUB-SECTIONS.

2. WHERE EAVE OR CORNICE VENTS ARE INSTALLED, PROVIDE BAFFLES TO MAINTAIN A MIN. 1" AIRSPACE BETWEEN INSULATION AND ROOF SHEATHING AND AT THE LOCATION OF THE VENT.

3. VENTILATION OPENINGS SHALL HAVE A LEAST DIMENSIONS OF 1/16" MIN. AND 1/4" MAX. VENTILATION OPENINGS HAVING A LEAST DIMENSION GREATER THAN 1/4" SHALL BE PROVIDED WITH AN APPROVED CORROSION PROTECTIVE COVER HAVING A LEAST DIMENSIONS OF 1/16" AND 1/4" MAXIMUM.

4. ALL VENTS SHALL BE INSTALLED PER THE MANUFACTURER'S WRITTEN SPECIFICATIONS (FREE FROM BLOCKAGES AND/OR OBSTRUCTIONS) PROVIDING ADEQUATE CROSS VENTILATION.

5. THE BUILDER/ROOFING CONTRACTOR SHALL BE RESPONSIBLE TO VERIFY ALL CALCULATIONS AND QUANTITIES OF REQUIRED VENTILATORS PRIOR TO INSTALLATION.

6. ROOF PLAN DEPICTED IS NOT INTENDED TO SERVE AS A TRUSS DESIGN

7. SEE BUILDING SECTIONS, WALL SECTIONS & ELEVATIONS FOR BEARING HEIGHTS

CALCULATIONS BELOW ARE BASED OFF OF THE FOLLOWING ASSUMPTIONS:

OFF RIDGE VENTS TO HAVE A NET FREE VENTILATION AREA OF:

TILE: O'HAGIN- MODEL -'S'= 97.5 SQ. INCHES PER VENT INSTALLED

SHINGLE: MILLENIUM METALS-MMI-2= 80.5 SQ. INCHES PER VENT INSTALLED
LOMANCO-TT0D = 140 SQ. INCHES PER VENT INSTALLED

INDICATES POSSIBLE LOCATION OF OFF RIDGE VENTS

SOFFIT VENTILATION TO HAVE A NET FREE VENTILATION AREA OF 10 SQ. INCHES PER LINEAR FOOT

INDICATES POSSIBLE LOCATION OF SOFFIT VENTING

## ATTIC VENTILATION CALCULATIONS

NET FREE VENTILATED AREA(S):

(O'HAGIN- MODEL 'S')
NFVA = 1,585 SQ. FT * 144 / 300 = 304-380 SQ. IN. REQUIRED (40%-50%)

(4) OFF RIDGE VENTS @ 97.5 SQ. IN. (O'HAGIN- MODEL 'S') = 390 SQ. IN. PROVIDED

(MILLENIUM METALS- MMI-2)
NFVA = 1,585 SQ. FT * 144 / 300 = 304-380 SQ. IN. REQUIRED (40%-50%)

(5) OFF RIDGE VENTS @ 80.5 SQ. IN. (MILLENIUM METALS- MMI-2) = 402 SQ. IN. PROVIDED

(LOMANCO-TT0D)
NFVA = 1,585 SQ. FT * 144 / 300 = 304-380 SQ. IN. REQUIRED (40%-50%)

(3) OFF RIDGE VENTS @ 140 SQ. IN. (LOMANCO-TT0D) = 420 SQ. IN. PROVIDED

+/- 200 LINEAR FEET OF VENTED SOFFIT.

ELEVATION A STD
ROOF PLAN
1/8"=1'-0" (11X17) 1/4"=1'-0" (22X34)

THIS STRUCTURE IS DESIGNED IN ACCORDANCE WITH THE 8th EDITION, 2023 OF THE FLORIDA BUILDING CODE-RESIDENTIAL AND IS CERTIFIED AS SUCH

LOT: 0000, COMMUNITY

PARK SQUARE HOMES RESERVES COPYRIGHT & OTHER RIGHTS RESTRICTING THESE DOCUMENTS TO THE ORIGINAL SITE OR PURPOSE FOR WHICH THEY WERE PREPARED. REPRODUCTIONS, CHANGES OR ASSIGNMENTS ARE PROHIBITED.

Park Square HOMES
A DIVISION OF PARK SQUARE ENTERPRISES, INC.
5200 Vineland Road, Suite 200
Orlando, Florida 32811
Phone: (407) 529 - 3000

TEG
THOMPSON ENGINEERING GROUP, INC.
4401 Vineland Road Suite A6 Orlando, FL 32811
Ph: (407) 734-1450
Fax: (407) 734-1790
www.teg1.com

ROOF PLAN

1585 CRUSADE
40' EXPLORATION SERIES

| REVISIONS | |
|---|---|
| DELTA # | DATE |
| | |

DATE: 09-05-25
SCALE: AS NOTED
DRAWN: MW
SHEET: 04.A

DISCLAIMER: CONTRACTOR/SUB-CONTRACTOR IS RESPONSIBLE TO REVIEW ALL INFORMATION CONTAINED HEREIN PRIOR TO COMMENCEMENT OF CONSTRUCTION. PARK SQUARE HOMES IS NOT RESPONSIBLE FOR ANY MISINTERPRETATIONS, ERRORS, OMISSIONS OR CUSTOM CHANGES MISSED AND NOT REPORTED PRIOR TO CONSTRUCTION. NO EXCEPTIONS.

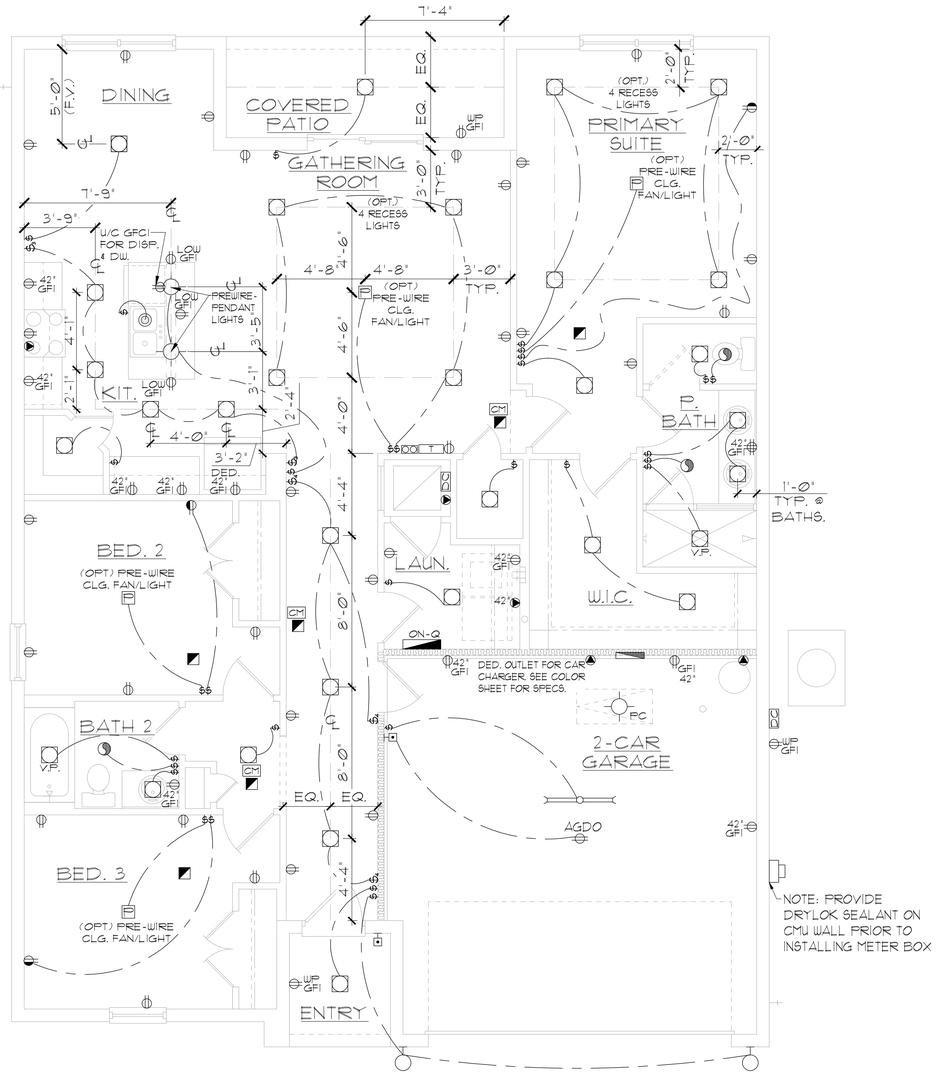


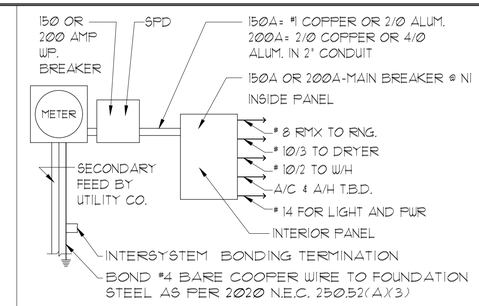


## ELECTRICAL RISER DIAGRAM

N.T.S.

NOTES:

1. ELECTRICAL MATERIALS AND INSTALLATIONS SHALL COMPLY W/ APPLICABLE PROVISIONS OF THE NATIONAL ELEC. CODE 250.52(A)(1) TO (6), NFPA 70, LOCAL CODES, AND THE LOCAL POWER/ UTILITY COMPANY.
2. ALL SERVICES SUPPLYING DWELLING UNITS SHALL BE PROVIDED WITH A SURGE-PROTECTION DEVICE (SPD) THE SPD SHALL BE A TYPE 1 OR TYPE 2 SPD.
3. SEE GENERAL NOTES PAGE FOR ADDITIONAL INFORMATION.

250.52(A)(3) Concrete-Encased Electrode.
Concrete-encased electrodes can be horizontal or vertical and must be at least 20 ft. long. Concrete-encased electrodes can be horizontal or vertical and must be at least 20 ft. long. There are two types of concrete-encased electrodes: (1) steel reinforcing bars or rods which are not less than 1/2 inch in diameter and at least 20 ft. long, encased in 2 inches of concrete; (2) 20 ft. of bare copper conductor not smaller than No. 4 AWG encased in 2 inches of concrete. The steel reinforcing rods must be in a location that is in direct contact with the earth. The reinforcing rods can be connected with tie wires, and a single length of rod can be used as the concrete-encased electrode. The reinforcing rods cannot be coated with non-conductive material. Section 250.50 requires a concrete-encased electrode to be connected to the grounding electrode system if it is present. Several states have modified this requirement to say a concrete-encased electrode must be used as a grounding electrode only if it is available. In those jurisdictions, if the footings or foundations have been poured before the electrical contractor arrives at the site, and a reinforcing rod is not available for use as a grounding electrode, then a grounding connection to the reinforcing rod is not required.

## ELECTRICAL LEGEND

| | | | |
|---|---|---|---|
| $ | SINGLE POLE SWITCH | | OUTLET, PHONE |
| $3 | THREE WAY SWITCH | | INTERCOM |
| | OUTLET 110-115 | | CHIMES |
| | OUTLET 110-115, SPLIT WIRED | | SMOKE DETECTOR/SMOKE ALARM W/ INTEGRATED SOUNDER BASE |
| | OUTLET 110-115, W/ USB | CM | CARBON MONOXIDE |
| | OUTLET 110-115, CEILING MOUNTED | | PUSH BUTTON |
| | OUTLET 110-115, FLOOR MOUNTED | | EXHAUST FAN |
| | SPECIAL PURPOSE 220-240 | | EX. FAN/LIGHT COMBO |
| | LIGHT FIXTURE, CEILING MOUNTED | | DISPOSAL |
| | LIGHT FIXTURE, WALL MOUNTED | | ON-Q PANEL |
| | LED LIGHT FIXTURE, RECESSED | | ELECTRICAL PANEL |
| E | LIGHT FIXTURE, RECESSED ADJUST. | F | CEILING FAN, PREWIRE |
| PC | LIGHT FIXTURE, PULL CHAIN | F | CEILING FAN, INSTALL |
| | LED LIGHT FIXTURE, FLUORESCENT | J | ELEC. JUNCTION BOX |
| | LIGHT FIXTURE, EXTERIOR FLOODS | | THERMOSTAT |
| EXIT | LIGHT FIXTURE, EMERGENCY EXIT | | DISCONNECT SWITCH |
| | LIGHT FIXTURE, EXIT/BACKUP | | ELEC. POWER METER |
| | OUTLET, TV/CABLE | | |

| ELECTRICAL DEVICES | ABOVE FIN. FLR. |
|---|---|
| SWITCHES AND WALL OUTLETS OVER COUNTERS | 48" TO C.L. |
| REMAINING SWITCHES | 48" TO C.L. |
| WALL OUTLETS | 12" TO C.L. |
| TELEPHONE OUTLETS | 12" TO C.L. |
| TELEVISION OUTLETS | 12" TO C.L. |
| EXTERIOR GFI'S | 12" TO C.L. |
| GARAGE GFI'S (ABOVE GARAGE FLOOR) | 48" TO C.L. |
| THERMOSTAT | 54" TO C.L. |
| DOOR BELL CHIMES | 84" TO C.L. |
| DOOR BELL BUTTON | LEVEL W/ DOOR HANDLE |
| KITCHEN HOOD FAN "WHIP" | 66" TO C.L. |
| KITCHEN WALL HUNG MICROWAVE RECEPTACLE | 76" TO C.L. |
| KITCHEN DISHWASHER RECEPTACLE | UNDER SINK |
| KITCHEN RANGE | 24" TO C.L. |
| KITCHEN REFRIGERATOR | 48" TO C.L. |
| WASHER/DRYER OUTLET | 36" TO C.L. |
| HOLLYWOOD LIGHTS | 84" TO C.L. |

C.L. = CENTER LINE

NOTE: SEE FINAL COLOR SHEET FOR TV, FANS & PHONE LOCATIONS

NOTE: ELEC. CONTRACTOR TO VERIFY IF ON-Q IS NEEDED PER COMMUNITY SPECS.

# ELEVATION A & C STD
# UTILITY PLAN

1/8"=1'-0" (11X17) 1/4"=1'-0" (22X34)

LOT: 0000, COMMUNITY

THIS STRUCTURE IS DESIGNED IN ACCORDANCE WITH THE 8th EDITION, 2023 OF THE FLORIDA BUILDING CODE-RESIDENTIAL AND IS CERTIFIED AS SUCH

PARK SQUARE HOMES RESERVES COPYRIGHT & OTHER RIGHTS RESTRICTING THESE DOCUMENTS TO THE ORIGINAL SITE OR PURPOSE FOR WHICH THEY WERE PREPARED. REPRODUCTIONS, CHANGES OR ASSIGNMENTS ARE PROHIBITED.

Park Square HOMES
A DIVISION OF PARK SQUARE ENTERPRISES, INC.
5200 Vineland Road, Suite 200
Orlando, Florida 32811
Phone: (407) 529 - 3000

TEG
THOMPSON ENGINEERING GROUP, INC
4401 Vineland Road Suite A5 Orlando, FL 32811
Ph: (407) 734-1450
Fax: (407) 734-1789
www.tegf.com

1585 CRUSADE

40' EXPLORATION SERIES

UTILITY PLAN

| REVISIONS | |
|---|---|
| DELTA # | DATE |
| | |

DATE: 08-05-25

SCALE: AS NOTED

DRAWN: MW

SHEET: E1

DISCLAIMER: CONTRACTOR/SUB-CONTRACTOR IS RESPONSIBLE TO REVIEW ALL INFORMATION CONTAINED HEREIN PRIOR TO COMMENCEMENT OF CONSTRUCTION. PARK SQUARE HOMES IS NOT RESPONSIBLE FOR ANY MISINTERPRETATIONS, ERRORS, OMISSIONS OR CUSTOM CHANGES MISSED AND NOT REPORTED PRIOR TO CONSTRUCTION. NO EXCEPTIONS.

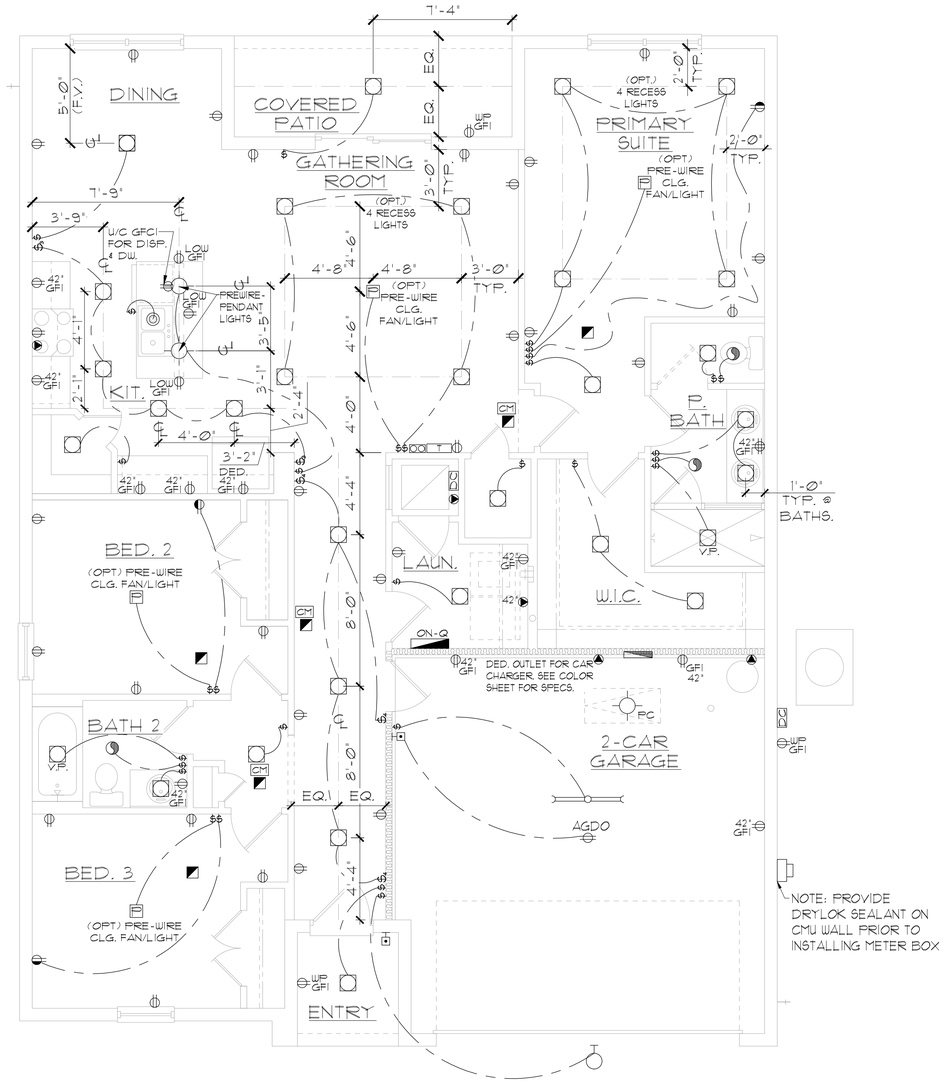


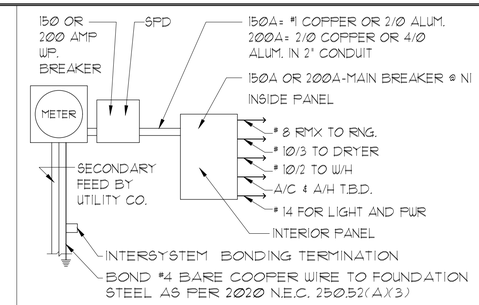


## ELECTRICAL RISER DIAGRAM

N.T.S.

NOTES:

1. ELECTRICAL MATERIALS AND INSTALLATIONS SHALL COMPLY W/ APPLICABLE PROVISIONS OF THE NATIONAL ELEC. CODE 250.52(A)(1) TO (6), NFPA 70, LOCAL CODES, AND THE LOCAL POWER/ UTILITY COMPANY.
2. ALL SERVICES SUPPLYING DWELLING UNITS SHALL BE PROVIDED WITH A SURGE-PROTECTION DEVICE (SPD) THE SPD SHALL BE A TYPE 1 OR TYPE 2 SPD.
3. SEE GENERAL NOTES PAGE FOR ADDITIONAL INFORMATION.

250.52(A)(3) Concrete-Encased Electrode.
Concrete-encased electrodes can be horizontal or vertical and must be at least 20 ft. long. Concrete-encased electrodes can be horizontal or vertical and must be at least 20 ft. long. There are two types of concrete-encased electrodes: (1) steel reinforcing bars or rods which are not less than 1/2 inch in diameter and at least 20 ft. long, encased in 2 inches of concrete; (2) 20 ft. of bare copper conductor not smaller than No. 4 AWG encased in 2 inches of concrete. The steel reinforcing rods must be in a location that is in direct contact with the earth. The reinforcing rods can be connected with tie wires, and a single length of rod can be used as the concrete-encased electrode. The reinforcing rods cannot be coated with non-conductive material. Section 250.50 requires a concrete-encased electrode to be connected to the grounding electrode system if it is present. Several states have modified this requirement to say a concrete-encased electrode must be used as a grounding electrode only if it is available. In those jurisdictions, if the footings or foundations have been poured before the electrical contractor arrives at the site, and a reinforcing rod is not available for use as a grounding electrode, then a grounding connection to the reinforcing rod is not required.

## ELECTRICAL LEGEND

| | | | |
|---|---|---|---|
| $ | SINGLE POLE SWITCH | | OUTLET, PHONE |
| $3 | THREE WAY SWITCH | | INTERCOM |
| | OUTLET 110-115 | | CHIMES |
| | OUTLET 110-115, SPLIT WIRED | | SMOKE DETECTOR/SMOKE ALARM W/ INTEGRATED SOUNDER BASE |
| | OUTLET 110-115, W/ USB | | |
| | OUTLET 110-115, CEILING MOUNTED | CM | CARBON MONOXIDE |
| | OUTLET 110-115, FLOOR MOUNTED | | PUSH BUTTON |
| | SPECIAL PURPOSE 220-240 | | EXHAUST FAN |
| | LIGHT FIXTURE, CEILING MOUNTED | | EX. FAN/LIGHT COMBO |
| | LIGHT FIXTURE, WALL MOUNTED | | DISPOSAL |
| | LED LIGHT FIXTURE, RECESSED | | ON-Q PANEL |
| E | LIGHT FIXTURE, RECESSED ADJUST. | | ELECTRICAL PANEL |
| PC | LIGHT FIXTURE, PULL CHAIN | P | CEILING FAN, PREWIRE |
| | LED LIGHT FIXTURE, FLUORESCENT | F | CEILING FAN, INSTALL |
| | LIGHT FIXTURE, EXTERIOR FLOODS | J | ELEC. JUNCTION BOX |
| EXIT | LIGHT FIXTURE, EMERGENCY EXIT | T | THERMOSTAT |
| | LIGHT FIXTURE, EXIT/BACKUP | DC | DISCONNECT SWITCH |
| | OUTLET, TV/CABLE | | ELEC. POWER METER |

| ELECTRICAL DEVICES | ABOVE FIN. FLR. |
|---|---|
| SWITCHES AND WALL OUTLETS OVER COUNTERS | 48" TO C.L. |
| REMAINING SWITCHES | 48" TO C.L. |
| WALL OUTLETS | 12" TO C.L. |
| TELEPHONE OUTLETS | 12" TO C.L. |
| TELEVISION OUTLETS | 12" TO C.L. |
| EXTERIOR GFI'S | 12" TO C.L. |
| GARAGE GFI'S (ABOVE GARAGE FLOOR) | 48" TO C.L. |
| THERMOSTAT | 54" TO C.L. |
| DOOR BELL CHIMES | 84" TO C.L. |
| DOOR BELL BUTTON | LEVEL W/ DOOR HANDLE |
| KITCHEN HOOD FAN "WHIP" | 66" TO C.L. |
| KITCHEN WALL HUNG MICROWAVE RECEPTACLE | 76" TO C.L. |
| KITCHEN DISHWASHER RECEPTACLE | UNDER SINK |
| KITCHEN RANGE | 24" TO C.L. |
| KITCHEN REFRIGERATOR | 48" TO C.L. |
| WASHER/DRYER OUTLET | 36" TO C.L. |
| HOLLYWOOD LIGHTS | 84" TO C.L. |

C.L. = CENTER LINE

NOTE: SEE FINAL COLOR SHEET FOR TV, FANS & PHONE LOCATIONS

NOTE: ELEC. CONTRACTOR TO VERIFY IF ON-Q IS NEEDED PER COMMUNITY SPECS.

# ELEVATION B STD
# UTILITY PLAN

1/8"=1'-0" (11X17) 1/4"=1'-0" (22X34)

THIS STRUCTURE IS DESIGNED IN ACCORDANCE WITH THE 8th EDITION, 2023 OF THE FLORIDA BUILDING CODE-RESIDENTIAL AND IS CERTIFIED AS SUCH

LOT: 0000, COMMUNITY

PARK SQUARE HOMES RESERVES COPYRIGHT & OTHER RIGHTS RESTRICTING THESE DOCUMENTS TO THE ORIGINAL SITE OR PURPOSE FOR WHICH THEY WERE PREPARED. REPRODUCTIONS, CHANGES OR ASSIGNMENTS ARE PROHIBITED.

Park Square HOMES
A DIVISION OF PARK SQUARE ENTERPRISES, INC.
5200 Vineland Road, Suite 200
Orlando, Florida 32811
Phone: (407) 529 - 3000

TEG
THOMPSON ENGINEERING GROUP, INC
4401 Vineland Road Suite A5 Orlando, FL 32811
Ph: (407) 734-1450
Fax: (407) 734-1789
www.tegpf.com

UTILITY PLAN

1585 CRUSADE

40' EXPLORATION SERIES

| REVISIONS | |
|---|---|
| DELTA # | DATE |
| | |

DATE: 09-05-25

SCALE: AS NOTED

DRAWN: MW

SHEET: E1

DISCLAIMER: CONTRACTOR/SUB-CONTRACTOR IS RESPONSIBLE TO REVIEW ALL INFORMATION CONTAINED HEREIN PRIOR TO COMMENCEMENT OF CONSTRUCTION. PARK SQUARE HOMES IS NOT RESPONSIBLE FOR ANY MISINTERPRETATIONS, ERRORS, OMISSIONS OR CUSTOM CHANGES MISSED AND NOT REPORTED PRIOR TO CONSTRUCTION. NO EXCEPTIONS.

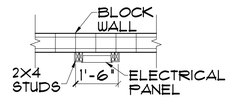


PLAN VIEW

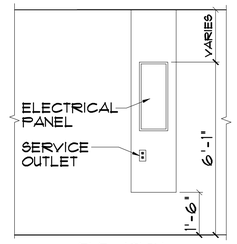


ELEVATION

## ELEC. PANEL DETAIL
N.T.S.

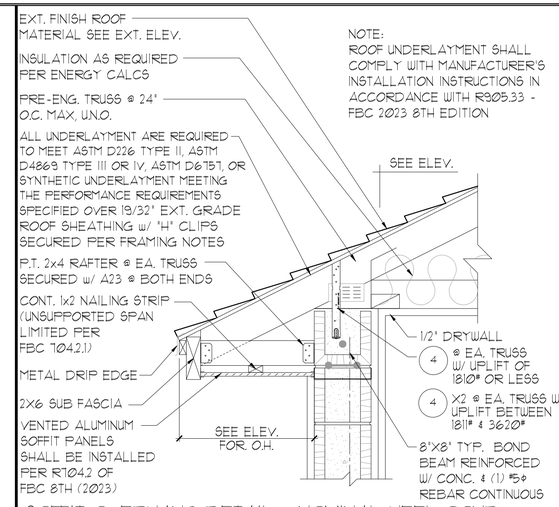


NOTE:
ROOF UNDERLAYMENT SHALL COMPLY WITH MANUFACTURER'S INSTALLATION INSTRUCTIONS IN ACCORDANCE WITH R905.33 - FBC 2023 8TH EDITION

## SOFFIT OVERHANG DETAIL - NOMINAL HEEL COND.
N.T.S.

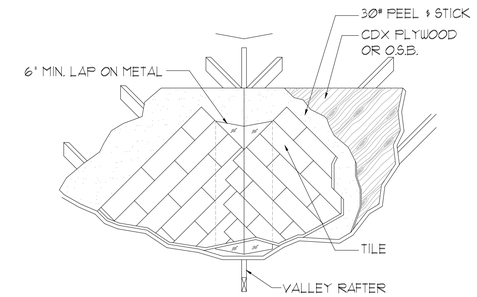


## VALLEY FLASHING DETAIL
N.T.S.

R903.2 Locations.
Flashings shall be installed at wall and roof intersections, wherever there is a change in roof slope or direction and around roof openings. Where flashing is of metal, the metal shall be corrosion resistant with a thickness of not less than provided in Table R903.2.1. OR IN COMPLIANCE WITH RAS 111.

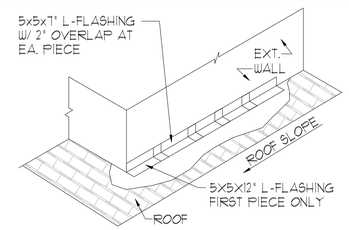


FLASHING DETAIL TO COMPLY WITH R903.2 OF THE FBC 2023 - 8TH ED.

## STEP WALL FLASHING
N.T.S.

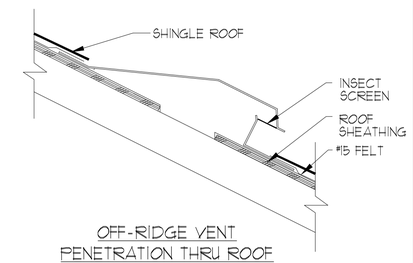


## OFF-RIDGE VENT PENETRATION THRU ROOF

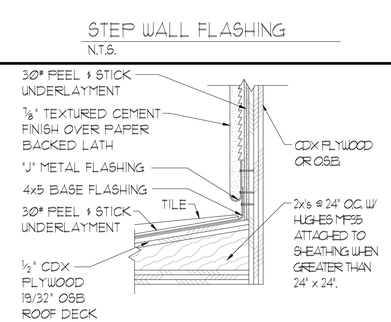


## ROOF TO WALL FLASHING DETAIL
N.T.S.

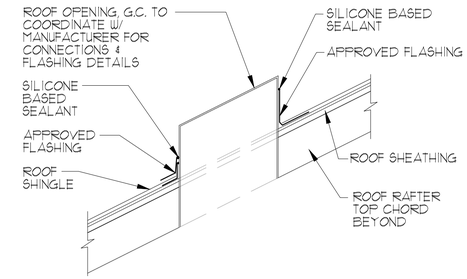


## OPENING PENETRATION THRU ROOF

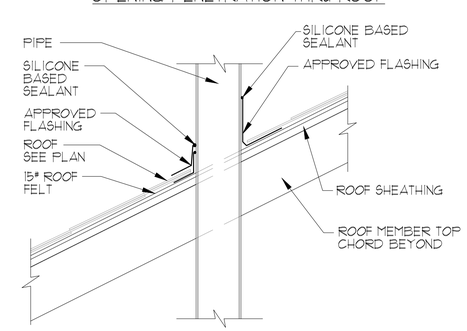


## PIPE PENETRATION THRU ROOF

## ROOF PENETRATION DETAIL
SCALE: N.T.S.

THIS STRUCTURE IS DESIGNED IN ACCORDANCE WITH THE 8th EDITION 2023 OF THE FLORIDA BUILDING CODE RESIDENTIAL AND IS CERTIFIED AS SUCH

LOT #: 0000, COMMUNITY

PARK SQUARE HOMES RESERVES COPYRIGHT & OTHER RIGHTS RESTRICTING THESE DOCUMENTS TO THE ORIGINAL SITE OR PURPOSE FOR WHICH THEY WERE PREPARED. REPRODUCTIONS, CHANGES OR ASSIGNMENTS ARE PROHIBITED.

Park Square HOMES
A DIVISION OF PARK SQUARE ENTERPRISES, INC.
5200 Vineland Road, Suite 200
Orlando, Florida 32811
Phone: (407) 529 - 3000

TEG
THOMPSON ENGINEERING GROUP, INC.
4401 Vineland Road Suite A6 Orlando, FL 32811
Ph: (407) 734-1400
Fax: (407) 734-1409
www.tegf.com

DETAILS

DETAILS

| REVISIONS | |
|---|---|
| DELTA # | DATE |
| | |

DATE: XX-XX-24
SCALE: AS NOTED
DRAWN: MR
SHEET: AD1

DISCLAIMER: CONTRACTOR/SUB-CONTRACTOR IS RESPONSIBLE TO REVIEW ALL INFORMATION CONTAINED HEREIN PRIOR TO COMMENCEMENT OF CONSTRUCTION. PARK SQUARE HOMES IS NOT RESPONSIBLE FOR ANY MISINTERPRETATIONS, ERRORS, OMISSIONS OR CUSTOM CHANGES MISSED AND NOT REPORTED PRIOR TO CONSTRUCTION. NO EXCEPTIONS.

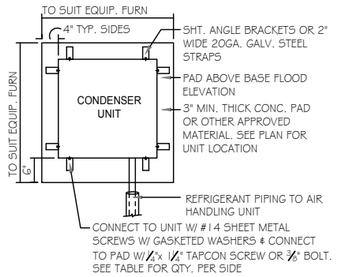


| ANCHOR SPACING TABLE | |
|---|---|
| LENGTH/SIDE | No. OF ANCHORS/SIDES |
| LESS THAN 12" | ONE / SIDE |
| 12" - 24" | TWO / SIDE |
| 36" UP & 5 TONS & UP | FOUR / SIDE |

1 COND. ANCHOR DETAIL
N.T.S.

## FIELD REPAIR NOTES

1- MISSED FOOTING DOWELS MAY BE SUBSTITUTED W/ A STRAIGHT #5 REBAR SET IN A 3/4" DIA. x 6" DEEP HOLE FILLED W/ UNITEX PROPOXY 300 OR SIMPSON SET OR ETF ADHESIVES.

2- BLOCK WALL OVERHANGING SLAB CONDITION: UP TO 7/8" - NO REPAIR NECESSARY 7/8" TO 1 1/4" - ADD FILLED CELL (NO VERTICAL STEEL) MIDPOINT OF WALL BETWEEN EXISTING FILLED CELLS (WITH STEEL) IN AREAS AFFECTED. 1 1/4"+ - REQUIRE SPECIAL ENGINEERING LETTER.

3- PENETRATION OF PLUMBING PIPES/DRYER VENTS THRU PLATES OF A LOAD BEARING WALL MAY OCCUR PROVIDED DBL. STUDS ARE ADDED ON EITHER SIDE OF PENETRATION WITHIN 3" AND TRUSS/FLOOR TRUSS IS NO CLOSER THAN 3" FROM PENETRATION. ADD (1) MTS12 @ TOP AND BOTTOM PLATE.

## VERIFICATION OF FIELD CONDITIONS:

CONTRACTOR SHALL VERIFY ALL FIELD CONDITIONS AND DIMENSIONS RELATIVE TO SAME. WHERE THERE ARE CONFLICTS BETWEEN ACTUAL FIELD CONDITIONS AND DATA PRESENTED IN THE DRAWINGS, SUCH CONDITIONS SHALL BE CALLED TO THE ARCHITECT'S AND OR TO THE ENGINEER OF RECORD'S (EOR) ATTENTION AND NECESSARY ADJUSTMENTS MADE PER THEIR INSTRUCTIONS.

## FOUNDATION NOTES

1. ⊠ CONTRACTOR VERIFY ALL DIMENSIONS ON JOB SITE.
2. ⊗ DENOTES FILL CELL REINF. W/ CONC. W/ 1 - #5 REBAR. GRADE 60. DENOTES FILL CELL RE NE_ W/ CONC. W/ 2-#5 REBAR. GRADE 60.
3. ⊛ DENOTES FLOOR SLAB OF PLANT MIX CONCRETE 2,500 P.S.I. 4" THICK WITH 6X6 10/10 GAUGE REINFORCING MAT. W/ MIN. 0.006mm (6mil) POLYETHYLENE VAPOR BARRIER OVER COMPACTED CLEAN FILL. WWF SHALL BE PLACE IN MIDDLE TO UPPER THIRD OF SLAB AND SUPPORTED ON APPROVED SLAB BOLSTERS. *FIBER MESH REINFORCEMENT MAY USED AS ALTERNATIVE TO WIRE.
4. DO NOT SCALE PRINTS! CONSTRUCTION TO BE FROM CALCULATED DIMENSIONS ONLY. ANY DISCREPANCIES OR ERRORS TO BE REPORTED PROMPTLY TO SUPER-VISOR FOR CLARIFICATION.
5. WATER HEATER T&P RELIEF VALVE SHALL E FULL SIZE TO EXTERIOR. WATER HEATER AT OR ABOVE FLOOR LEVEL G1-FALL E IN A FAN WITH DRAIN TO EXTERIOR. WATER HEATER SHALL HAVE APPROVED THERMAL EXPANSION DEVICE
6. PAVERS MAY BE USED ILO CONCRETE SLABS IN PATIO, PORCH, DRIVE AND WALKWAY AREAS. DELETE SLAB IN AREAS PAVERS ARE USED.
7. MECHANICAL EQUIP. LOCATIONS WILL BE DETERMINED BY COMMUNITY AND COUNTY CODES.
8. IN LIEU OF TREATING THE SOIL, AN ALTERNATIVE TO TERMITE TREATED SOIL CA BE PREMISE 75 WP TERMICIDE.
9. BORA -CARE TO BE APPLIED ON INTERIOR WALLS W/ MANUFACTURER'S INSTRUCTIONS AND SPECIFICATIONS, PURSUANT FLORIDA BUILDING CODE LATEST EDITION.

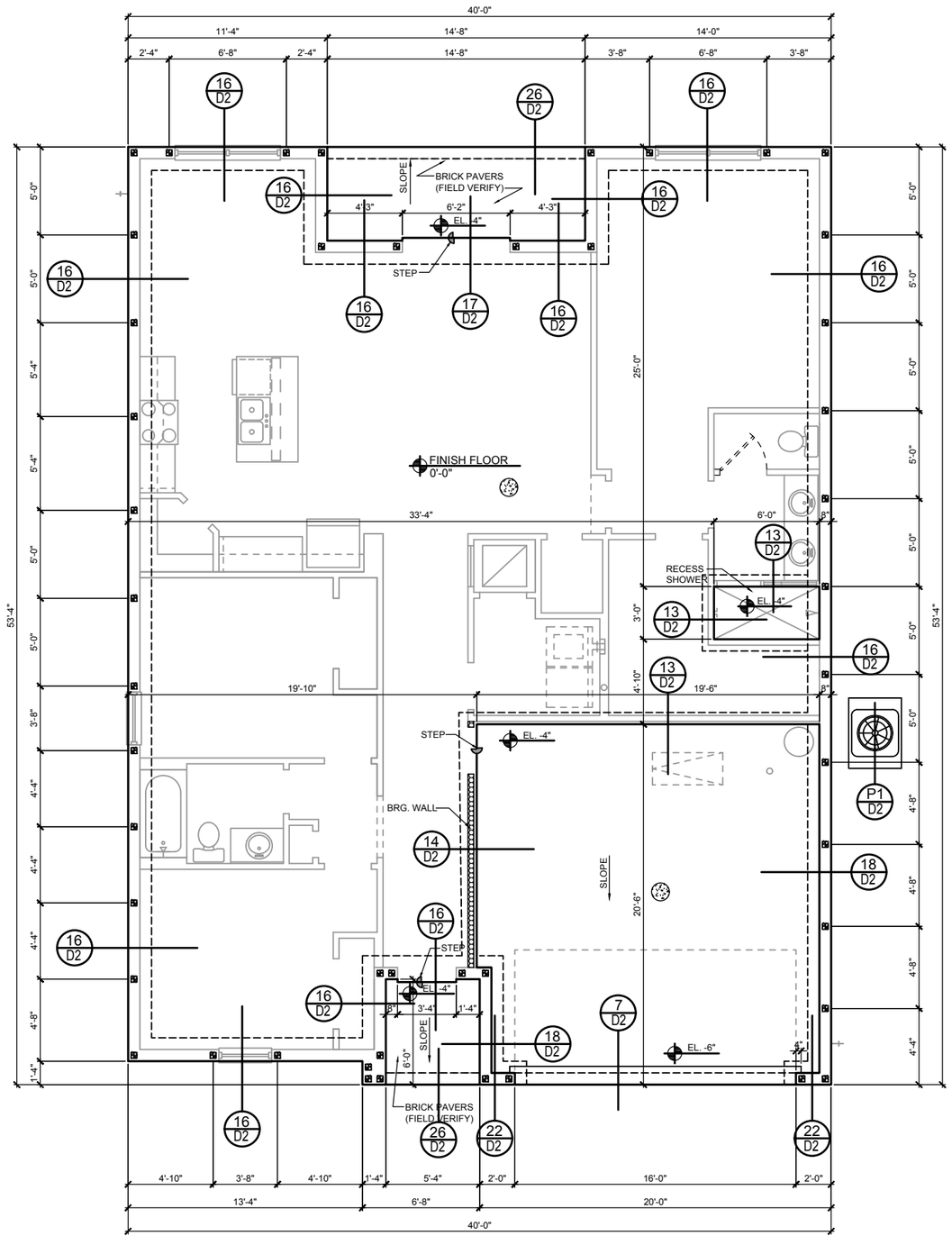


# FOUNDATION PLAN
A, B, C (STANDARD)
1/8"=1'-0" (11x17) 1/4"=1'-0" (22x37)

THIS STRUCTURE IS DESIGNED IN ACCORDANCE WITH THE 8th EDITION, 2023 OF THE FLORIDA BUILDING CODE-RESIDENTIAL AND IS CERTIFIED AS SUCH

LOT: 0000, COMMUNITY

PARK SQUARE HOMES RESERVES COPYRIGHT & OTHER RIGHTS RESTRICTING THESE DOCUMENTS TO THE ORIGINAL SITE OR PURPOSE FOR WHICH THEY WERE PREPARED. REPRODUCTIONS, CHANGES OR ASSIGNMENTS ARE PROHIBITED.

Park Square HOMES
A DIVISION OF PARK SQUARE ENTERPRISES, INC.
5200 Vineland Road, Suite 200
Orlando, Florida 32811
Phone: (407) 529 - 3000

TEG
THOMPSON ENGINEERING GROUP, INC
8401 Vineland Road Suite A6 Orlando, FL 32811
Phone: (407) 734-1440
Fax: (407) 734-1790
www.tegfl.com

FOUNDATION PLAN

1585 CRUSADE
40' EXPLORATION SERIES

| REVISIONS | |
|---|---|
| DELTA # | DATE |
| | |

DATE: 09-05-25
SCALE: AS NOTED
DRAWN: MW
SHEET: S1

DISCLAIMER: CONTRACTOR/SUB-CONTRACTOR IS RESPONSIBLE TO REVIEW ALL INFORMATION CONTAINED HEREIN PRIOR TO COMMENCEMENT OF CONSTRUCTION. PARK SQUARE HOMES IS NOT RESPONSIBLE FOR ANY MISINTERPRETATIONS, ERRORS, OMISSIONS OR CUSTOM CHANGES MISSED AND NOT REPORTED PRIOR TO CONSTRUCTION. NO EXCEPTIONS.

# SAFE LOAD TABLES
## FOR GRAVITY, UPLIFT & LATERAL LOADS

### 8" PRECAST & PRESTRESSED U-LINTELS — GRAVITY

| LENGTH | 8U8 | 8F8-0B / 8F8-1B | 8F12-0B / 8F12-1B | 8F16-0B / 8F16-1B | 8F20-0B / 8F20-1B | 8F24-0B / 8F24-1B | 8F28-0B / 8F28-1B | 8F32-0B / 8F32-1B |
|---|---|---|---|---|---|---|---|---|
| 2'-10" (34") PRECAST | 2302 | 3166 | 4473 | 6039 | 7526 | 9004 | 10472 | 11936 |
| | | 3166 | 4473 | 6039 | 7526 | 9004 | 10472 | 11936 |
| 3'-6" (42") PRECAST | 2302 | 3138 | 3377 | 4689 | 6001 | 7315 | 8630 | 9947 |
| | | 3166 | 4473 | 6039 | 7526 | 9004 | 10472 | 11936 |
| 4'-0" (48") PRECAST | 2029 | 2325 | 2496 | 3467 | 4438 | 5410 | 6384 | 7358 |
| | | 2646 | 4473 | 6039 | 7526 | 9004 | 10472 | 11936 |
| 4'-6" (54") PRECAST | 1651 | 1787 | 1913 | 2657 | 3403 | 4149 | 4896 | 5644 |
| | | 2170 | 4027 | 6039 | 7526 | 9004 | 10472 | 9668 |
| 5'-4" (64") PRECAST | 1184 | 1223 | 1301 | 1809 | 2317 | 2826 | 3336 | 3846 |
| | | 1665 | 2889 | 5057 | 6096 | 5400 | 6424 | 7450 |
| 5'-10" (70") PRECAST | 972 | 1000 | 1059 | 1474 | 1889 | 2304 | 2721 | 3137 |
| | | 1459 | 2464 | 4144 | 5458 | 4437 | 5280 | 6122 |
| 6'-6" (78") PRECAST | 937 | 1255 | 2101 | 3263 | 2746 | 3358 | 3971 | 4585 |
| | | 1255 | 2101 | 3396 | 5260 | 7134 | 8995 | 6890 |
| 7'-6" (90") PRECAST | 767 | 1029 | 1675 | 2385 | 1994 | 2439 | 2886 | 3333 |
| | | 1029 | 1675 | 2610 | 3839 | 5596 | 6613 | 5047 |
| 8'-0" (96") PRECAST | 670 | 830 | 1362 | 1927 | 1602 | 1961 | 2320 | 2680 |
| | | 899 | 1445 | 2214 | 3192 | 4533 | 6513 | 4087 |
| 8'-8" (104") PRECAST | 618 | 767 | 1257 | 1779 | 1479 | 1810 | 2142 | 2474 |
| | | 829 | 1332 | 2044 | 2946 | 4184 | 6012 | 3773 |
| 9'-4" (112") PRECAST | 573 | 632 | 1049 | 1469 | 1210 | 1482 | 1754 | 2027 |
| | | 768 | 1212 | 1818 | 2544 | 3469 | 4030 | 3127 |
| 10'-6" (126") PRECAST | 456 | 482 | 802 | 1125 | 915 | 1122 | 1328 | 1535 |
| | | 658 | 1025 | 1514 | 2081 | 2774 | 3130 | 2404 |
| 11'-4" (136") PRECAST | 445 | 598 | 935 | 1365 | 1854 | 2355 | 1793 | 2075 |
| | | 598 | 935 | 1365 | 1854 | 2441 | 3155 | 4044 |
| 12'-0" (144") PRECAST | 414 | 545 | 864 | 1254 | 1689 | 2074 | 1570 | 1818 |
| | | 555 | 864 | 1254 | 1693 | 2211 | 2832 | 3590 |
| 13'-4" (160") PRECAST | 362 | 427 | 726 | 1028 | 1331 | 1635 | 1224 | 1418 |
| | | 485 | 748 | 1076 | 1438 | 1855 | 2343 | 2920 |
| 14'-0" (168") PRECAST | 338 | 381 | 648 | 919 | 1190 | 1462 | 1087 | 1260 |
| | | 455 | 700 | 1003 | 1335 | 1714 | 2153 | 2666 |
| 14'-8" (176") PRESTRESSED | N.R. | NR | NR | NR | NR | NR | NR | NR |
| | | 465 | 765 | 1370 | 2045 | 2610 | 3185 | 3765 |
| 15'-4" (184") PRESTRESSED | N.R. | NR | NR | NR | NR | NR | NR | NR |
| | | 420 | 695 | 1250 | 1855 | 2370 | 2890 | 3410 |
| 17'-4" (208") PRESTRESSED | N.R. | NR | NR | NR | NR | NR | NR | NR |
| | | 310 | 530 | 950 | 1400 | 1800 | 2200 | 2600 |
| 19'-4" (232") PRESTRESSED | N.R. | NR | NR | NR | NR | NR | NR | NR |
| | | 240 | 400 | 750 | 1090 | 1400 | 1720 | 2030 |
| 21'-4" (256") PRESTRESSED | N.R. | NR | NR | NR | NR | NR | NR | NR |
| | | 183 | 330 | 610 | 940 | 1340 | 1780 | 2110 |
| 22'-0" (264") PRESTRESSED | N.R. | NR | NR | NR | NR | NR | NR | NR |
| | | 160 | 300 | 570 | 870 | 1250 | 1660 | 1970 |
| 24'-0" (288") PRESTRESSED | N.R. | NR | NR | NR | NR | NR | NR | NR |
| | | 130 | 240 | 470 | 720 | 1030 | 1350 | 1610 |

### 8" PRECAST W/ 2" RECESS DOOR U-LINTELS — GRAVITY

| LENGTH | 8RU6 | 8RF6-0B / 8RF6-1B | 8RF10-0B / 8RF10-1B | 8RF14-0B / 8RF14-1B | 8RF18-0B / 8RF18-1B | 8RF22-0B / 8RF22-1B | 8RF26-0B / 8RF26-1B | 8RF30-0B / 8RF30-1B |
|---|---|---|---|---|---|---|---|---|
| 4'-4"(52") PRECAST | 1489 | 1591 | 3053 | 2982 | 3954 | 4929 | 5904 | 6880 |
| | | 1827 | 3412 | 4982 | 6472 | 7947 | 9416 | 10878 |
| 4'-6"(54") PRECAST | 1357 | 1449 | 2782 | 2714 | 3600 | 4487 | 5375 | 6264 |
| | | 1702 | 3412 | 4982 | 6472 | 7947 | 9416 | 10878 |
| 5'-8"(68") PRECAST | 785 | 832 | 1602 | 1550 | 2058 | 2566 | 3075 | 3585 |
| | | 1153 | 2162 | 4074 | 6472 | 6516 | 5814 | 6839 |
| 5'-10"(70") PRECAST | 735 | 779 | 1500 | 1449 | 1924 | 2400 | 2876 | 3352 |
| | | 1103 | 2051 | 3811 | 6472 | 6516 | 5450 | 6411 |
| 6'-8"(80") PRECAST | 822 | 907 | 1677 | 2933 | 2576 | 3223 | 3872 | 4522 |
| | | 907 | 1677 | 2933 | 4100 | 6730 | 8177 | 6707 |
| 7'-6"(90") PRECAST | 665 | 761 | 1377 | 2252 | 1958 | 2451 | 2944 | 3439 |
| | | 764 | 1377 | 2329 | 3609 | 5492 | 6624 | 5132 |
| 9'-8"(116")PRECAST | 371 | 420 | 834 | 1253 | 1071 | 1342 | 1614 | 1886 |
| | | 535 | 928 | 1497 | 2179 | 2618 | 3595 | 2875 |

### 8" PRECAST & PRESTRESSED U-LINTELS — UPLIFT / LATERAL

| LENGTH | 8F8-1T / 8F8-2T | 8F12-1T / 8F12-2T | 8F16-1T / 8F16-2T | 8F20-1T / 8F20-2T | 8F24-1T / 8F24-2T | 8F28-1T / 8F28-2T | 8F32-1T / 8F32-2T | LATERAL 8U8 | LATERAL 8F8 |
|---|---|---|---|---|---|---|---|---|---|
| 2'-10" (34") PRECAST | 2727 | 2878 | 4101 | 5332 | 6569 | 7811 | 9055 | 2021 | 2021 |
| | 2727 | 2784 | 3981 | 5190 | 6407 | 7630 | 8857 | | |
| 3'-6" (42") PRECAST | 2165 | 2289 | 3260 | 4237 | 5219 | 6204 | 7192 | 1257 | 1257 |
| | 2165 | 2215 | 3165 | 4125 | 5091 | 6061 | 7036 | | |
| 4'-0" (48") PRECAST | 1878 | 1989 | 2832 | 3680 | 4532 | 5387 | 6245 | 938 | 938 |
| | 1878 | 1925 | 2750 | 3583 | 4422 | 5264 | 6110 | | |
| 4'-6" (54") PRECAST | 1660 | 1762 | 2507 | 3257 | 4010 | 4767 | 5525 | 727 | 727 |
| | 1660 | 1705 | 2435 | 3171 | 3913 | 4658 | 5406 | | |
| 5'-4" (64") PRECAST | 1393* | 1484 | 2110 | 2741 | 3375 | 4010 | 4648 | 505 | 505 |
| | 1393 | 1437 | 2050 | 2670 | 3293 | 3920 | 4549 | | |
| 5'-10" (70") PRECAST | 1272* | 1357 | 1930 | 2505 | 3084 | 3665 | 4247 | 418 | 418 |
| | 1272 | 1315 | 1875 | 2441 | 3010 | 3583 | 4157 | | |
| 6'-6" (78") PRECAST | 1141* | 1200 | 1733 | 2250 | 2769 | 3290 | 3812 | 707 | 887 |
| | 1141 | 1182 | 1684 | 2192 | 2703 | 3216 | 3732 | | |
| 7'-6" (90") PRECAST | 959* | 912 | 1475 | 1914 | 2354 | 2797 | 3240 | 591 | 657 |
| | 990 | 1029 | 1466 | 1907 | 2351 | 2797 | 3245 | | |
| 9'-4" (112")PRECAST | 801* | 612 | 980 | 1269 | 1560 | 1852 | 2144 | 454 | 630 |
| | 801 | 755 | 1192 | 1550 | 1910 | 2271 | 2634 | | |
| 10'-6" (126") PRECAST | 716* | 498 | 793 | 1027 | 1261 | 1496 | 1731 | 396 | 493 |
| | 716 | 611 | 1039 | 1389 | 1711 | 2034 | 2358 | | |
| 11'-4" (136") PRECAST | 666* | 439 | 696 | 899 | 1104 | 1309 | 1515 | 363 | 556 |
| | 666 | 535 | 905 | 1295 | 1595 | 1896 | 2198 | | |
| 12'-0" (144") PRECAST | 607* | 400 | 631 | 816 | 1001 | 1186 | 1372 | 340 | 494 |
| | 631 | 486 | 818 | 1209 | 1514 | 1799 | 2086 | | |
| 13'-4" (160") PRECAST | 500* | 340 | 532 | 686 | 841 | 997 | 1153 | 302 | 398 |
| | 573 | 409 | 682 | 1004 | 1367 | 1637 | 1897 | | |
| 14'-0" (168") PRECAST | 458* | 316 | 493 | 635 | 778 | 922 | 1065 | 286 | 360 |
| | 548 | 378 | 629 | 922 | 1254 | 1567 | 1816 | | |
| 14'-8" (176") PRESTRESSED | 243 | 295 | 459 | 591 | 724 | 857 | 990 | N.R. | 357 |
| | 243 | 352 | 582 | 852 | 1156 | 1491 | 1742 | | |
| 15'-4" (184") PRESTRESSED | 228 | 278 | 430 | 553 | 677 | 801 | 925 | N.R. | 327 |
| | 228 | 329 | 542 | 791 | 1072 | 1381 | 1676 | | |
| 17'-4" (208") PRESTRESSED | 188 | 236 | 361 | 464 | 567 | 670 | 774 | N.R. | 255 |
| | 188 | 276 | 449 | 649 | 874 | 1121 | 1389 | | |
| 19'-4" (232") PRESTRESSED | 165 | 207 | 313 | 401 | 490 | 578 | 667 | N.R. | 204 |
| | 165 | 239 | 383 | 550 | 736 | 940 | 1160 | | |
| 21'-4" (256") PRESTRESSED | 145 | 186 | 278 | 356 | 433 | 512 | 590 | N.R. | 172 |
| | 142 | 212 | 336 | 477 | 635 | 807 | 993 | | |
| 22'-0" (264") PRESTRESSED | 140 | 180 | 268 | 343 | 418 | 493 | 568 | N.R. | 161 |
| | 137 | 205 | 322 | 457 | 607 | 771 | 947 | | |
| 24'-0" (288") PRESTRESSED | 127 | 165 | 244 | 312 | 380 | 447 | 515 | N.R. | 135 |
| | 124 | 186 | 290 | 408 | 538 | 680 | 833 | | |

*REDUCE VALUE BY 25% FOR GRADE 40 FIELD REBAR

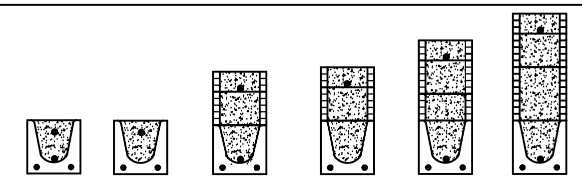


## TYPE DESIGNATION

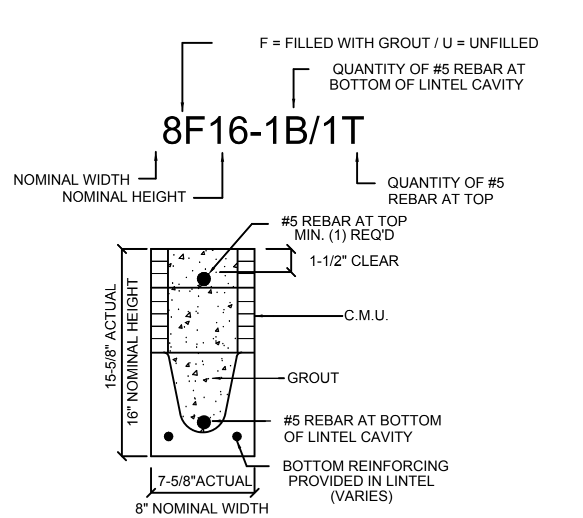


## MATERIALS

1. f'c precast lintels = 3500 psi.
2. f'c prestressed lintels = 6000 psi.
3. f'c grout = 3000 psi w/ maximum 3/8" aggregate.
4. Concrete masonry units (CMU) per ASTM C90 w/ minimum net area compressive strength = 1900 psi.
5. Rebar provided in precast lintel per ASTM A615 GR60. Field rebar per ASTM A615 GR40 or GR60.
6. Prestressing strand per ASTM A416 grade 270 low relaxation.
7. 7/32 wire per ASTM A510.
8. Mortar per ASTM C270 type M or S.

## GENERAL NOTES

1. Provide full mortar head and bed joints.
2. Shore filled lintels as required.
3. Installation of lintel must comply with the architectural and/or structural drawings.
4. Lintels are manufactured with 5-1/2" long notches at the ends to accommodate vertical cell reinforcing and grouting.
5. All lintels meet or exceed L/360 vertical deflection, except lintels 17'-4" and longer with a nominal height of 8" meet or exceed L/180.
6. Bottom field added rebar to be located at the bottom of the lintel cavity.
7. 7/32" diameter wire stirrups are welded to the bottom steel for mechanical anchorage.
8. Cast-in-place concrete may be provided in composite lintel in lieu of concrete masonry units.
9. Safe load ratings based on rational design analysis per ACI 318 and ACI 530

## SAFE LOAD TABLE NOTES

1. All values based on minimum 4" bearing. Exception: Safe loads for unfilled lintels must be reduced by 20% if bearing length is less than 6-1/2". Safe loads for all recessed lintels based on 8" nominal bearing.
2. N.R. = Not Rated.
3. Safe loads are total superimposed allowable load on the section specified.
4. Safe loads based on grade 40 or grade 60 field rebar.
5. Additional lateral load capacity can be obtained by the designer by providing addional reinforced masonry above the precast lintel.
6. One #7 rebar may be substituted for two #5 rebars in 8" lintels only.
7. The designer may evaluate concentrated loads from the safe load tables by calculating the maximum resisting moment and shear at d-away from the face of support.
8. For composite lintel heights not shown, use safe load from next lower height.
9. All safe loads in units of pounds per linear foot.

### 8" PRECAST W/ 2" RECESS DOOR U-LINTELS — UPLIFT / LATERAL

| LENGTH | 8RF6-1T / 8RF6-2T | 8RF10-1T / 8RF10-2T | 8RF14-1T / 8RF14-2T | 8RF18-1T / 8RF18-2T | 8RF22-1T / 8RF22-2T | 8RF26-1T / 8RF26-2T | 8RF30-1T / 8RF30-2T | LATERAL 8RU6 | LATERAL 8RF6 |
|---|---|---|---|---|---|---|---|---|---|
| 4'-4" (52") PRECAST | 1244 | 1573 | 2413 | 3260 | 4112 | 4967 | 5825 | 932 | 932 |
| | 1244 | 1519 | 2339 | 3170 | 4008 | 4850 | 5696 | | |
| 4'-6" (54") PRECAST | 1192 | 1507 | 2311 | 3121 | 3937 | 4756 | 5577 | 853 | 853 |
| | 1192 | 1455 | 2240 | 3036 | 3837 | 4643 | 5453 | | |
| 5'-8" (68") PRECAST | 924* | 1172 | 1795 | 2423 | 3055 | 3689 | 4325 | 501 | 501 |
| | 924 | 1132 | 1741 | 2357 | 2978 | 3603 | 4230 | | |
| 5'-10" (70") PRECAST | 896* | 1138 | 1742 | 2352 | 2965 | 3581 | 4198 | 469 | 469 |
| | 896 | 1099 | 1690 | 2288 | 2891 | 3497 | 4106 | | |
| 6'-8" (80") PRECAST | 778 | 882 | 1513 | 2042 | 2573 | 3107 | 3642 | 830 | 1100 |
| | 778 | 956 | 1468 | 1987 | 2509 | 3035 | 3563 | | |
| 7'-6" (90") PRECAST | 688 | 697 | 1325 | 1810 | 2280 | 2753 | 3227 | 710 | 941 |
| | 688 | 849 | 1302 | 1762 | 2225 | 2690 | 3157 | | |
| 9'-8" (116")PRECAST | 533* | 433 | 808 | 1123 | 1413 | 1704 | 1995 | 516 | 614 |
| | 533 | 527 | 1009 | 1369 | 1728 | 2088 | 2450 | | |

*REDUCE VALUE BY 25% FOR GRADE 40 FIELD REBAR

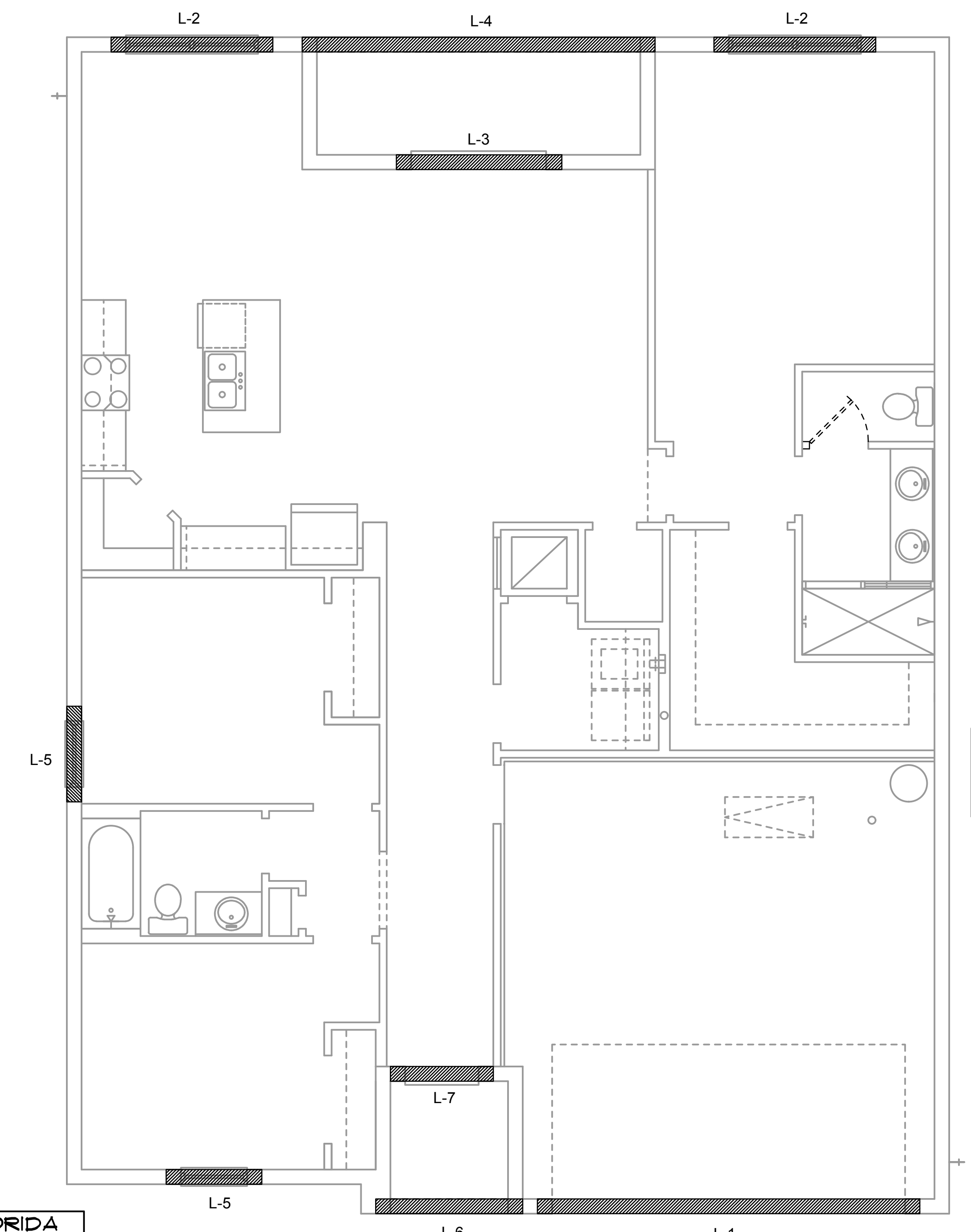


### CAST CRETE / LOTTS / WEKIWA / FLORIDA ROCK - PRECAST LINTEL SCHEDULE

| LINTEL NO. | LENGTH | TYPE | COMMENTS |
|---|---|---|---|
| L-1 | 17'-4" | 8F28-1B/1T | GARAGE |
| L-2 | 7'-6" | 8F16-1B/1T | PR SH25 |
| L-3 | 7'-6" | 8F24-1B/1T | 6/0X6/8 SGD |
| L-4 | 17'-4" | 8F16-1B/1T | LANAI, CUT TO FIT |
| L-5 | 4'-6" | 8F16-1B/1T | SH25 |
| L-6 | 7'-6" | 8F16-1B/1T | ENTRY |
| L-7 | 4'-6" | 8RF22-1B/1T | 3068 DR |

## PRECAST LINTEL PLAN
A,B,C (STANDARD)
1/8"=1'-0" (11x17) 1/4"=1'-0" (22x34)

DISCLAIMER: CONTRACTOR/SUB-CONTRACTOR IS RESPONSIBLE TO REVIEW ALL INFORMATION CONTAINED HEREIN PRIOR TO COMMENCEMENT OF CONSTRUCTION. PARK SQUARE HOMES IS NOT RESPONSIBLE FOR ANY MISINTERPRETATIONS, ERRORS, OMISSIONS OR CUSTOM CHANGES MISSED AND NOT REPORTED PRIOR TO CONSTRUCTION. NO EXCEPTIONS.

THIS STRUCTURE IS DESIGNED IN ACCORDANCE WITH THE 8th EDITION, 2023 OF THE FLORIDA BUILDING CODE-RESIDENTIAL AND IS CERTIFIED AS SUCH

LOT: 0000, COMMUNITY

PARK SQUARE HOMES RESERVES COPYRIGHT & OTHER RIGHTS RESTRICTING THESE DOCUMENTS TO THE ORIGINAL SITE OR PURPOSE FOR WHICH THEY WERE PREPARED. REPRODUCTIONS, CHANGES OR ASSIGNMENTS ARE PROHIBITED.

TEG
THOMPSON ENGINEERING GROUP, INC
4401 Vineland Road Suite A6 Orlando, FL. 32811
Ph: (407) 734-1450
Fax: (407) 734-1790
www.tegfl.com

Park Square HOMES
A DIVISION OF PARK SQUARE ENTERPRISES, INC.
5200 Vineland Road, Suite 200
Orlando, Florida 32811
Phone: (407) 529 - 3000

PRECAST LINTEL PLAN

1585 CRUSADE

40' EXPLORATION SERIES

| REVISIONS | |
|---|---|
| DELTA # | DATE |
| | |

DATE: 09-05-25
SCALE: AS NOTED
DRAWN: MW
SHEET: S2

# CONNECTOR SCHEDULE

| CONNECT. TYPE | SIMPSON DESCRIPTION | SIMPSON FASTENERS PER CONNECTOR | MAX. UPLIFT | LAT. LDS. F1 / F2 |
|---|---|---|---|---|
| 4 | HETA16 | 9-10d x 1½" | 1,810 | 65 / 960 |
| 5 | DETAL20 | 18-10d x 1½" | 2,480 | 2000/ 1370 |
| 20 | H3 | RFT: 4-8d / PLT: 4-8d | 400 | 210 / 170 |
| 21 | H1 | RFT:6-8dx1½"/PLT:4-8d | 480 | 510 / 165 |
| 22 | H10S | RFT: 8-8d x 1½"<br>PLT: 8-8d x 1½" | 1010 | 660/550 |
| 23 | LUS26 | HDR: 4-10d/JST: 4-10d | 935 | N/A |
| 24 | H7 | RFT / TRS: 4-8d<br>PLT / STD: 10-8d | 985 | 400 / N/A |
| 26 | H2.5 | RFT:5-8d / PLT: 5-8d | 415 | 150 / 150 |
| 34 | A34 | H:4-8dx1½"/P:4-8dx1½" | 365 | 280 / 303 |
| 35 | A35F | H:4-8dx1½"/P:4-8dx1½" | 440 | 440 / N/A |
| 37 | HTS16 | 14-10d | 1,310 | N/A |
| 38 | MTS16 | 14-10d | 990 | N/A |
| 39 | MTS30 | 14-10d | 990 | N/A |
| 43 | LSTA12 | 10-10d | 905 | N/A |
| 45 | ST18 | 14-16d | 1,200 | N/A |
| 47 | LSTA24 | 18-10d | 1,295 | N/A |
| 71 | MSTA36 | 26-10d | 2,135 | N/A |
| 72 | MSTC66 | 64-16d SINKERS | 5,495 | N/A |
| 79 | SP1 | STD:6-10d / PLT:4-10d | 535 | 560 / 260 |
| 80 | SP2 | STD:6-10d / PLT:6-10d | 605 | 560 / 260 |
| 81 | SPH4,6,8 | 12-10d x 1½" | 885 | N/A |
| 90 | ABU66 | 12-16d | 2,240 | N/A |
| 89 | CB66 | (2) 7/8" BOLTS | 2,300 | 985 |
| 92 | ABU44 | 12-16d | 2,200 | N/A |
| 93 | AC6 (MAX) | 28-16d | 1,815 | 1,070 |
| 94 | AC4 (MAX) | 28-16d | 1,815 | 1,070 |
| 95 | HTS20 | 20-10d | 1,450 | N/A |
| 96 | HD8A | SILL: 7/8" BOLT<br>STUD:(3) 7/8"X5½" BOLTS | 7,910 | N/A |
| 97 | MTSM16 | BLOCK: 4-¼"X2¼" TC<br>JOIST : 7-10d | 860 | N/A |
| 98 | HTT4 | SILL: 5/8" BOLT<br>STRAP: 18-16d | 4,235 | N/A |
| 99 | A35 | H:4-8dx1½"/P:4-8dx1½" | 440 | 440 / N/A |
| 102 | HTT5 | 5/8" BOLT/ 26-10d | 4,275 | N/A |
| 103 | VGTR/L | 32-SDS¼"X3"/(2) 7/8" BLT | 3,990 | N/A |
| 104 | HDU8-SDS2.5 | 7/8" BLT/20-SDS ¼"x2½" | 5,020 | N/A |
| 110 | HCP1.81 | (6) 0.148 x 1½" | 590 | 255 / N/A |
| 167 | HHUS46 | H:14-16d/J:6-16d | 1,550 | N/A |
| 168 | U46 | H:8-10d/J:4-10d | 710 | N/A |
| 181 | HUS26 | 20-16d | 1,550 | N/A |
| 184 | HUC28-2 | H:14-16d/J:4-10d | 1,085 | N/A |
| 214 | HUC212-3TF | HD:16-3/16"X1½" TAPCON<br>BM: 6-16d | 1,135 | N/A |
| 215 | HGUS210-2 | HDR:46-16d/JST:10-16d | 2,720 | N/A |
| 216 | HUS412 | BLOCK: 10-¼"X1½" TC<br>JOIST : 10-16d | 3,240 | N/A |
| 217 | HUS212-2 | BLOCK: 10-¼"X1½" TC<br>JOIST : 10-16d | 2,630 | N/A |
| 219 | MBHA412 | H:1-ATR3/4X8 TOP&FACE<br>JOIST: 18-10d | 3,145 | N/A |
| 220 | N/A | N/A | 1,620 | N/A |
| 226 | MBHA4.75/12 | HDR : (2) 3/4" φ x 8"<br>JOIST : 18-10d | 2,160 | N/A |
| 231 | MBHA3.56/16 | HDR : (2) 3/4" φ x 8"<br>JOIST : 18-10d | 3,450 | N/A |
| 232 | MBHA5.50/16 | HDR : (2) 3/4" φ x 8"<br>JOIST : 18-10d | 3,450 | N/A |
| 240 | H16 | R:2-10dx1½"P:10-10dx1½" | 1,470 | 480 / N/A |
| 241 | LGT2 | 30-16d-sinker | 2000 | 1015 / 440 |
| 301 | MGT | (1) 5/8"BLTS./GIR: 22-10d | 3,965 | N/A |
| 302 | HGT-2 or 3 | LTL:3/4"BLTS./GIR: 8-10d | 6485 | N/A |
| 303 | HGT-4 | LTL:3/4"BLTS./GIR: 16-10d | 9,250 | N/A |
| 401 | SUR/L414 | FACE:18-16d/JST:8-16d | 1,700 | N/A |
| T | CONNECTORS TO BE SPECIFIED & PROVIDED BY TRUSS MANUFACTURERS | | | |

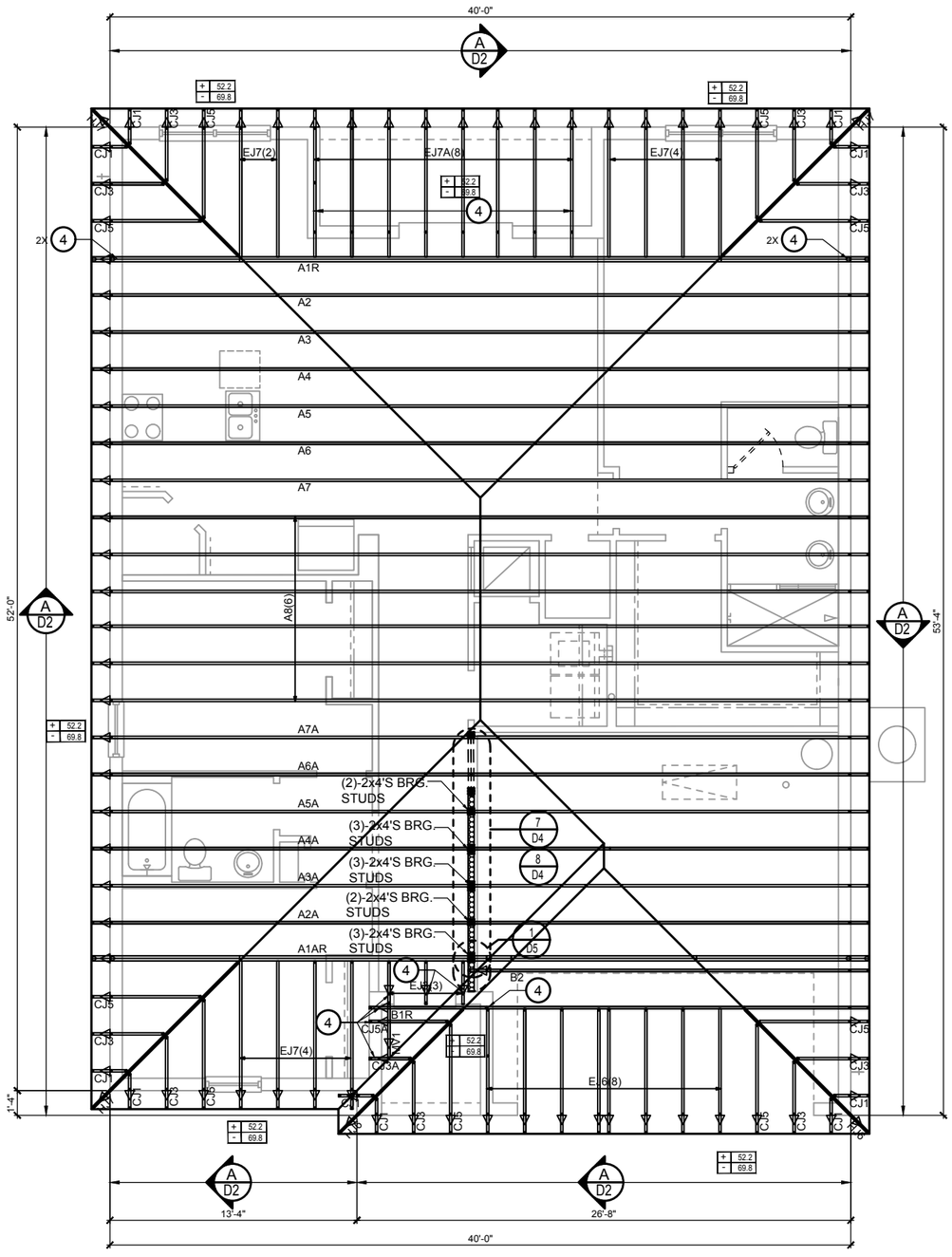


WALL KEY

T.O.WALL 8'-8"

## COMPONENT & CLADDING DESIGN WIND PRESSURES

SEE PLAN DESIGN WIND PRESSURE

| | |
|---|---|
| + XXX | ULTIMATE DESIGNED POSITIVE PRESSURE |
| - XXX | ULTIMATE DESIGNED NEGATIVE PRESSURE |

NOTE: DESIGN PRESSURES BASED ULTIMATE WIND SPEED TO OBTAIN NOMINAL "ASD" WIND PRESSURES MULTIPLY VALUES SHOWN BY A FACTOR OF 0.6

## FIELD REPAIR NOTES

**1-** MISSED FOOTING DOWELS MAY BE SUBSTITUTED W/ A STRAIGHT #5 REBAR SET IN A 3/4" DIA. x 6" DEEP HOLE FILLED W/ UNITEX PROPOXY 300 OR SIMPSON SET OR ETF ADHESIVES.

**2-** BLOCK WALL OVERHANGING SLAB CONDITION: UP TO 7/8" - NO REPAIR NECESSARY 7/8" TO 1¼" - ADD FILLED CELL (NO VERTICAL STEEL) MIDPOINT OF WALL BETWEEN EXISTING FILLED CELLS (WITH STEEL) IN AREAS AFFECTED. 1¼"+ - REQUIRE SPECIAL ENGINEERING LETTER.

**3-** PENETRATION OF PLUMBING PIPES/DRYER VENTS THRU PLATES OF A LOAD BEARING WALL MAY OCCUR PROVIDED DBL. STUDS ARE ADDED ON EITHER SIDE OF PENETRATION WITHIN 3" AND TRUSS/FLOOR TRUSS IS NO CLOSER THAN 3" FROM PENETRATION. ADD (1) MTS12 @ TOP AND BOTTOM PLATE

## NOTES

1. TYPICAL ROOF GABLE OVERHANG TO BE 12" UNLESS OTHERWISE NOTED.

2. TYPICAL ROOF EAVES OVERHANG TO BE 16" UNLESS OTHERWISE NOTED.

3. PROVIDE AND INSTALL FLASHING AND ROOFING AS PER NATIONAL ROOFING AND SHEET METAL ASSOC.STANDARDS AND/ OR ACCEPTABLE INDUSTRY PRACTICE AND IN ACCORDANCE WITH 8TH EDITION (2023)FLORIDA RESIDENTIAL CODE.

4. ALL ROOF TRUSSES, GIRDERS, BEAMS, HEADERS, ETC. TO BE SIZE BY TRUSS MANUFACTURER OR FL. REG. ENG.

5. TRUSSES SHALL BE BRACED TO PREVENT ROTATION & PROVIDE LATERAL STABILITY KIN ACCORDANCE WITH THE REQUIREMENTS SPECIFIED IN THE CONSTRUCTION DOCUMENTS FOR BUILDING & ON THE INDIVIDUAL TRUSS DESIGN DRAWINGS IN THE ABSENCE OF SPECIFIC BRACING REQUIREMENTS, TRUSSES SHALL BE BRACED IN ACCORDANCE WITH TPI/WTCA BCSI 1.

6. REFER TO TRUSS MANUFACTURERS DRAWINGS FOR TRUSS PLACEMENT & TRUSS TO TRUSS CONNECTIONS.

7. ROOF UNDERLAYMENT TO BE USED IS 30 LBS. SYNTHETIC FELT.

8. SHINGLE ROOF : UNDERLAYMENT TO BE INSTALLED IAW FBCR 2023, 8TH EDITION R905.1.1.1 UNDERLAYMENT MATERIALS REQUIRED TO COMPLY WITH ASTM D226, D1970, D4869 AND D6757 SHALL BEAR A LABEL INDICATING COMPLIANCE TO THE STANDARD DESIGNATION AND, IF APPLICABLE, TYPE CLASSIFICATION INDICATED IN TABLE R905.1.1.1 UNDERLAYMENT SHALL BE APPLIED AND ATTACHED IN ACCORDANCE WITH TABLE R905.1.1.1

9. OFF RIDGE VENTS MAXIMUM OPENING SIZES: REFER TO MANUFACTURE SPECIFICATIONS.

# ROOF FRAMING PLAN

A (STANDARD)

1/8"=1'-0" (11x17) 1/4"=1'-0" (22x37)

THIS STRUCTURE IS DESIGNED IN ACCORDANCE WITH THE 8th EDITION, 2023 OF THE FLORIDA BUILDING CODE-RESIDENTIAL AND IS CERTIFIED AS SUCH

PARK SQUARE HOMES RESERVES COPYRIGHT & OTHER RIGHTS RESTRICTING THESE DOCUMENTS TO THE ORIGINAL SITE OR PURPOSE FOR WHICH THEY WERE PREPARED. REPRODUCTIONS, CHANGES OR ASSIGNMENTS ARE PROHIBITED.

TEG
THOMPSON ENGINEERING GROUP, INC
8401 Vineland Road Suite A6 Orlando, FL 32811
Phone: (407) 734-1790
Fax: (407) 734-1790
www.tegfl.com

Park Square HOMES
A DIVISION OF PARK SQUARE ENTERPRISES, INC.
5200 Vineland Road, Suite 200
Orlando, Florida 32811
Phone: (407) 529 - 3000

ROOF FRAMING PLAN

1585 CRUSADE
40' EXPLORATION SERIES

LOT: 0000, COMMUNITY

| REVISIONS | |
|---|---|
| DELTA ♦ | DATE |
| | |

DATE: 09-05-25
SCALE: AS NOTED
DRAWN: MW
SHEET: S3

DISCLAIMER: CONTRACTOR/SUB-CONTRACTOR IS RESPONSIBLE TO REVIEW ALL INFORMATION CONTAINED HEREIN PRIOR TO COMMENCEMENT OF CONSTRUCTION. PARK SQUARE HOMES IS NOT RESPONSIBLE FOR ANY MISINTERPRETATIONS, ERRORS, OMISSIONS OR CUSTOM CHANGES MISSED AND NOT REPORTED PRIOR TO CONSTRUCTION. NO EXCEPTIONS.

# CONNECTOR SCHEDULE

| CONNECT. TYPE | SIMPSON DESCRIPTION | SIMPSON FASTENERS PER CONNECTOR | MAX. UPLIFT | LAT. LDS. F1 / F2 |
|---|---|---|---|---|
| 4 | HETA16 | 9-10d x 1½" | 1,810 | 65 / 960 |
| 5 | DETAL20 | 18-10d x 1½" | 2,480 | 2000/ 1370 |
| 20 | H3 | RFT: 4-8d / PLT: 4-8d | 400 | 210 / 170 |
| 21 | H1 | RFT:6-8dx1½"/PLT:4-8d | 480 | 510 / 165 |
| 22 | H10S | RFT: 8-8d x 1½"<br>PLT: 8-8d x 1½" | 1010 | 660/550 |
| 23 | LUS26 | HDR: 4-10d/JST: 4-10d | 935 | N/A |
| 24 | H7 | RFT / TRS: 4-8d<br>PLT / STD: 10-8d | 985 | 400 / N/A |
| 26 | H2.5 | RFT:5-8d / PLT: 5-8d | 415 | 150 / 150 |
| 34 | A34 | H:4-8dx1½"/P:4-8dx1½" | 365 | 280 / 303 |
| 35 | A35F | H:4-8dx1½"/P:4-8dx1½" | 440 | 440 / N/A |
| 37 | HTS16 | 14-10d | 1,310 | N/A |
| 38 | MTS16 | 14-10d | 990 | N/A |
| 39 | MTS30 | 14-10d | 990 | N/A |
| 43 | LSTA12 | 10-10d | 905 | N/A |
| 45 | ST18 | 14-16d | 1,200 | N/A |
| 47 | LSTA24 | 18-10d | 1,295 | N/A |
| 71 | MSTA36 | 26-10d | 2,135 | N/A |
| 72 | MSTC66 | 64-16d SINKERS | 5,495 | N/A |
| 79 | SP1 | STD:6-10d / PLT:4-10d | 535 | 560 / 260 |
| 80 | SP2 | STD:6-10d / PLT:6-10d | 605 | 560 / 260 |
| 81 | SPH4,6,8 | 12-10d x 1½" | 885 | N/A |
| 90 | ABU66 | 12-16d | 2,240 | N/A |
| 89 | CB66 | (2) 7/8" BOLTS | 2,300 | 985 |
| 92 | ABU44 | 12-16d | 2,200 | N/A |
| 93 | AC6 (MAX) | 28-16d | 1,815 | 1,070 |
| 94 | AC4 (MAX) | 28-16d | 1,815 | 1,070 |
| 95 | HTS20 | 20-10d | 1,450 | N/A |
| 96 | HD8A | SILL: 7/8" BOLT<br>STUD:(3) 7/8"X5½" BOLTS | 7,910 | N/A |
| 97 | MTSM16 | BLOCK: 4-¼"X2¼" TC<br>JOIST : 7-10d | 860 | N/A |
| 98 | HTT4 | SILL: 5/8" BOLT<br>STRAP: 18-16d | 4,235 | N/A |
| 99 | A35 | H:4-8dx1½"/P:4-8dx1½" | 440 | 440 / N/A |
| 102 | HTT5 | 5/8" BOLT/ 26-10d | 4,275 | N/A |
| 103 | VGTR/L | 32-SDS¼"X3"/(2) 7/8" BLT | 3,990 | N/A |
| 104 | HDU8-SDS2.5 | 7/8" BLT/20-SDS ¼"x2½" | 5,020 | N/A |
| 110 | HCP1.81 | (6) 0.148 x 1½" | 590 | 255 / N/A |
| 167 | HHUS46 | H:14-16d/J:6-16d | 1,550 | N/A |
| 168 | U46 | H:8-10d/J:4-10d | 710 | N/A |
| 181 | HUS26 | 20-16d | 1,550 | N/A |
| 184 | HUC28-2 | H:14-16d/J:4-10d | 1,085 | N/A |
| 214 | HUC212-3TF | HD:16-3/16"X1½" TAPCON<br>BM: 6-16d | 1,135 | N/A |
| 215 | HGUS210-2 | HDR:46-16d/JST:10-16d | 2,720 | N/A |
| 216 | HUS412 | BLOCK: 10-¼"X1½" TC<br>JOIST : 10-16d | 3,240 | N/A |
| 217 | HUS212-2 | BLOCK: 10-¼"X1½" TC<br>JOIST : 10-16d | 2,630 | N/A |
| 219 | MBHA412 | H:1-ATR3/4X8 TOP&FACE<br>JOIST: 18-10d | 3,145 | N/A |
| 220 | N/A | N/A | 1,620 | N/A |
| 226 | MBHA4.75/12 | HDR : (2) 3/4" φ x 8"<br>JOIST : 18-10d | 2,160 | N/A |
| 231 | MBHA3.56/16 | HDR : (2) 3/4" φ x 8"<br>JOIST : 18-10d | 3,450 | N/A |
| 232 | MBHA5.50/16 | HDR : (2) 3/4" φ x 8"<br>JOIST : 18-10d | 3,450 | N/A |
| 240 | H16 | R:2-10dx1½"P:10-10dx1½" | 1,470 | 480 / N/A |
| 241 | LGT2 | 30-16d-sinker | 2000 | 1015 / 440 |
| 301 | MGT | (1) 5/8"BLTS./GIR: 22-10d | 3,965 | N/A |
| 302 | HGT-2 or 3 | LTL:3/4"BLTS./GIR: 8-10d | 6485 | N/A |
| 303 | HGT-4 | LTL:3/4"BLTS./GIR: 16-10d | 9,250 | N/A |
| 401 | SUR/L414 | FACE:18-16d/JST:8-16d | 1,700 | N/A |
| T | CONNECTORS TO BE SPECIFIED & PROVIDED BY TRUSS MANUFACTURERS | | | |

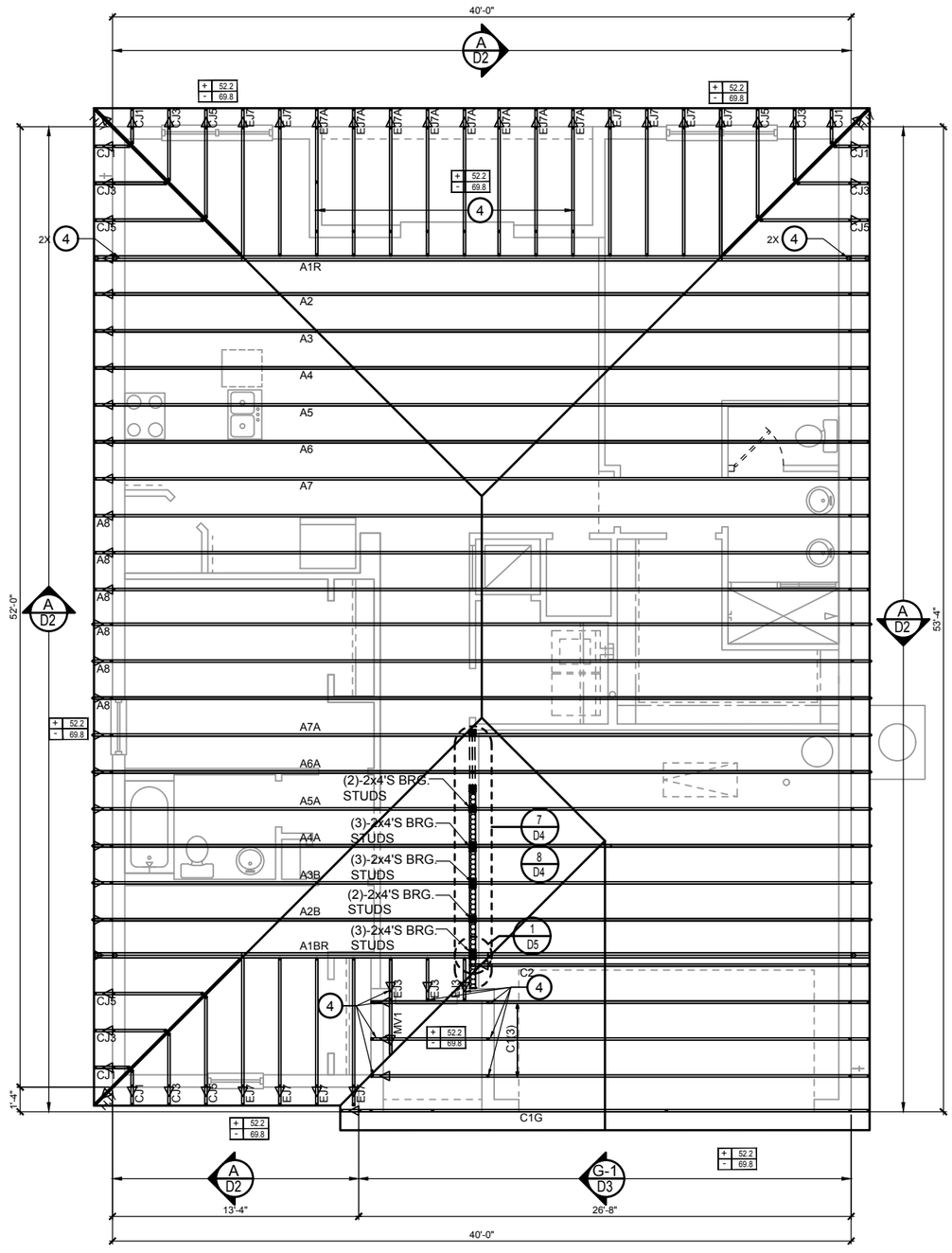


## WALL KEY

T.O.WALL 8'-8"

## COMPONENT & CLADDING DESIGN WIND PRESSURES

SEE PLAN DESIGN WIND PRESSURE

| | |
|---|---|
| + XXX | ULTIMATE DESIGNED POSITIVE PRESSURE |
| - XXX | ULTIMATE DESIGNED NEGATIVE PRESSURE |

NOTE: DESIGN PRESSURES BASED ULTIMATE WIND SPEED TO OBTAIN NOMINAL "ASD" WIND PRESSURES MULTIPLY VALUES SHOWN BY A FACTOR OF 0.6

## FIELD REPAIR NOTES

**1-** MISSED FOOTING DOWELS MAY BE SUBSTITUTED W/ A STRAIGHT #5 REBAR SET IN A 3/4" DIA. x 6" DEEP HOLE FILLED W/ UNITEX PROPOXY 300 OR SIMPSON SET OR ETF ADHESIVES.

**2-** BLOCK WALL OVERHANGING SLAB CONDITION: UP TO 7/8" - NO REPAIR NECESSARY 7/8" TO 1¼" - ADD FILLED CELL (NO VERTICAL STEEL) MIDPOINT OF WALL BETWEEN EXISTING FILLED CELLS (WITH STEEL) IN AREAS AFFECTED. 1¼"+ - REQUIRE SPECIAL ENGINEERING LETTER.

**3-** PENETRATION OF PLUMBING PIPES/DRYER VENTS THRU PLATES OF A LOAD BEARING WALL MAY OCCUR PROVIDED DBL. STUDS ARE ADDED ON EITHER SIDE OF PENETRATION WITHIN 3" AND TRUSS/FLOOR TRUSS IS NO CLOSER THAN 3" FROM PENETRATION. ADD (1) MTS12 @ TOP AND BOTTOM PLATE

## NOTES

1. TYPICAL ROOF GABLE OVERHANG TO BE 12" UNLESS OTHERWISE NOTED.

2. TYPICAL ROOF EAVES OVERHANG TO BE 16" UNLESS OTHERWISE NOTED.

3. PROVIDE AND INSTALL FLASHING AND ROOFING AS PER NATIONAL ROOFING AND SHEET METAL ASSOC.STANDARDS AND/ OR ACCEPTABLE INDUSTRY PRACTICE AND IN ACCORDANCE WITH 8TH EDITION (2023)FLORIDA RESIDENTIAL CODE.

4. ALL ROOF TRUSSES, GIRDERS, BEAMS, HEADERS, ETC. TO BE SIZE BY TRUSS MANUFACTURER OR FL. REG. ENG.

5. TRUSSES SHALL BE BRACED TO PREVENT ROTATION & PROVIDE LATERAL STABILITY KIN ACCORDANCE WITH THE REQUIREMENTS SPECIFIED IN THE CONSTRUCTION DOCUMENTS FOR BUILDING & ON THE INDIVIDUAL TRUSS DESIGN DRAWINGS IN THE ABSENCE OF SPECIFIC BRACING REQUIREMENTS, TRUSSES SHALL BE BRACED IN ACCORDANCE WITH TPI/WTCA BCSI 1.

6. REFER TO TRUSS MANUFACTURERS DRAWINGS FOR TRUSS PLACEMENT & TRUSS TO TRUSS CONNECTIONS.

7. ROOF UNDERLAYMENT TO BE USED IS 30 LBS. SYNTHETIC FELT.

8. SHINGLE ROOF : UNDERLAYMENT TO BE INSTALLED IAW FBCR 2023, 8TH EDITION R905.1.1.1 UNDERLAYMENT MATERIALS REQUIRED TO COMPLY WITH ASTM D226, D1970, D4869 AND D6757 SHALL BEAR A LABEL INDICATING COMPLIANCE TO THE STANDARD DESIGNATION AND, IF APPLICABLE, TYPE CLASSIFICATION INDICATED IN TABLE R905.1.1.1 UNDERLAYMENT SHALL BE APPLIED AND ATTACHED IN ACCORDANCE WITH TABLE R905.1.1.1

9. OFF RIDGE VENTS MAXIMUM OPENING SIZES: REFER TO MANUFACTURE SPECIFICATIONS.

# ROOF FRAMING PLAN

B (STANDARD)

1/8"=1'-0" (11x17) 1/4"=1'-0" (22x37)

THIS STRUCTURE IS DESIGNED IN ACCORDANCE WITH THE 8th EDITION, 2023 OF THE FLORIDA BUILDING CODE-RESIDENTIAL AND IS CERTIFIED AS SUCH

PARK SQUARE HOMES RESERVES COPYRIGHT & OTHER RIGHTS RESTRICTING THESE DOCUMENTS TO THE ORIGINAL SITE OR PURPOSE FOR WHICH THEY WERE PREPARED. REPRODUCTIONS, CHANGES OR ASSIGNMENTS ARE PROHIBITED.

TEG
THOMPSON ENGINEERING GROUP, INC
8401 Vineland Road Suite A6 Orlando, FL 32811
Phone: (407) 734-1440
Fax: (407) 734-1790
www.tegfl.com

Park Square HOMES
A DIVISION OF PARK SQUARE ENTERPRISES, INC.
5200 Vineland Road, Suite 200
Orlando, Florida 32811
Phone: (407) 529 - 3000

ROOF FRAMING PLAN

1585 CRUSADE
40' EXPLORATION SERIES

LOT: 0000, COMMUNITY

| REVISIONS | |
|---|---|
| DELTA ♦ | DATE |
| | |

DATE: 09-05-25
SCALE: AS NOTED
DRAWN: MW
SHEET: S3

DISCLAIMER: CONTRACTOR/SUB-CONTRACTOR IS RESPONSIBLE TO REVIEW ALL INFORMATION CONTAINED HEREIN PRIOR TO COMMENCEMENT OF CONSTRUCTION. PARK SQUARE HOMES IS NOT RESPONSIBLE FOR ANY MISINTERPRETATIONS, ERRORS, OMISSIONS OR CUSTOM CHANGES MISSED AND NOT REPORTED PRIOR TO CONSTRUCTION. NO EXCEPTIONS.

# CONNECTOR SCHEDULE

| CONNECT. TYPE | SIMPSON DESCRIPTION | SIMPSON FASTENERS PER CONNECTOR | MAX. UPLIFT | LAT. LDS. F1 / F2 |
|---|---|---|---|---|
| 4 | HETA16 | 9-10d x 1½" | 1,810 | 65 / 960 |
| 5 | DETAL20 | 18-10d x 1½" | 2,480 | 2000/ 1370 |
| 20 | H3 | RFT: 4-8d / PLT: 4-8d | 400 | 210 / 170 |
| 21 | H1 | RFT:6-8dx1½"/PLT:4-8d | 480 | 510 / 165 |
| 22 | H10S | RFT: 8-8d x 1½"<br>PLT: 8-8d x 1½" | 1010 | 660/550 |
| 23 | LUS26 | HDR: 4-10d/JST: 4-10d | 935 | N/A |
| 24 | H7 | RFT / TRS: 4-8d<br>PLT / STD: 10-8d | 985 | 400 / N/A |
| 26 | H2.5 | RFT:5-8d / PLT: 5-8d | 415 | 150 / 150 |
| 34 | A34 | H:4-8dx1½"/P:4-8dx1½" | 365 | 280 / 303 |
| 35 | A35F | H:4-8dx1½"/P:4-8dx1½" | 440 | 440 / N/A |
| 37 | HTS16 | 14-10d | 1,310 | N/A |
| 38 | MTS16 | 14-10d | 990 | N/A |
| 39 | MTS30 | 14-10d | 990 | N/A |
| 43 | LSTA12 | 10-10d | 905 | N/A |
| 45 | ST18 | 14-16d | 1,200 | N/A |
| 47 | LSTA24 | 18-10d | 1,295 | N/A |
| 71 | MSTA36 | 26-10d | 2,135 | N/A |
| 72 | MSTC66 | 64-16d SINKERS | 5,495 | N/A |
| 79 | SP1 | STD:6-10d / PLT:4-10d | 535 | 560 / 260 |
| 80 | SP2 | STD:6-10d / PLT:6-10d | 605 | 560 / 260 |
| 81 | SPH4,6,8 | 12-10d x 1½" | 885 | N/A |
| 90 | ABU66 | 12-16d | 2,240 | N/A |
| 89 | CB66 | (2) 7/8" BOLTS | 2,300 | 985 |
| 92 | ABU44 | 12-16d | 2,200 | N/A |
| 93 | AC6 (MAX) | 28-16d | 1,815 | 1,070 |
| 94 | AC4 (MAX) | 28-16d | 1,815 | 1,070 |
| 95 | HTS20 | 20-10d | 1,450 | N/A |
| 96 | HD8A | SILL: 7/8" BOLT<br>STUD:(3) 7/8"X5½" BOLTS | 7,910 | N/A |
| 97 | MTSM16 | BLOCK: 4-¼"X2¼" TC<br>JOIST : 7-10d | 860 | N/A |
| 98 | HTT4 | SILL: 5/8" BOLT<br>STRAP: 18-16d | 4,235 | N/A |
| 99 | A35 | H:4-8dx1½"/P:4-8dx1½" | 440 | 440 / N/A |
| 102 | HTT5 | 5/8" BOLT/ 26-10d | 4,275 | N/A |
| 103 | VGTR/L | 32-SDS¼"X3"/(2) 7/8" BLT | 3,990 | N/A |
| 104 | HDU8-SDS2.5 | 7/8" BLT/20-SDS ¼"x2½" | 5,020 | N/A |
| 110 | HCP1.81 | (6) 0.148 x 1½" | 590 | 255 / N/A |
| 167 | HHUS46 | H:14-16d/J:6-16d | 1,550 | N/A |
| 168 | U46 | H:8-10d/J:4-10d | 710 | N/A |
| 181 | HUS26 | 20-16d | 1,550 | N/A |
| 184 | HUC28-2 | H:14-16d/J:4-10d | 1,085 | N/A |
| 214 | HUC212-3TF | HD:16-3/16"X1½" TAPCON<br>BM: 6-16d | 1,135 | N/A |
| 215 | HGUS210-2 | HDR:46-16d/JST:10-16d | 2,720 | N/A |
| 216 | HUS412 | BLOCK: 10-¼"X1½" TC<br>JOIST : 10-16d | 3,240 | N/A |
| 217 | HUS212-2 | BLOCK: 10-¼"X1½" TC<br>JOIST : 10-16d | 2,630 | N/A |
| 219 | MBHA412 | H:1-ATR3/4X8 TOP&FACE<br>JOIST: 18-10d | 3,145 | N/A |
| 220 | N/A | N/A | 1,620 | N/A |
| 226 | MBHA4.75/12 | HDR : (2) 3/4" φ x 8"<br>JOIST : 18-10d | 2,160 | N/A |
| 231 | MBHA3.56/16 | HDR : (2) 3/4" φ x 8"<br>JOIST : 18-10d | 3,450 | N/A |
| 232 | MBHA5.50/16 | HDR : (2) 3/4" φ x 8"<br>JOIST : 18-10d | 3,450 | N/A |
| 240 | H16 | R:2-10dx1½"P:10-10dx1½" | 1,470 | 480 / N/A |
| 241 | LGT2 | 30-16d-sinker | 2000 | 1015 / 440 |
| 301 | MGT | (1) 5/8"BLTS./GIR: 22-10d | 3,965 | N/A |
| 302 | HGT-2 or 3 | LTL:3/4"BLTS./GIR: 8-10d | 6485 | N/A |
| 303 | HGT-4 | LTL:3/4"BLTS./GIR: 16-10d | 9,250 | N/A |
| 401 | SUR/L414 | FACE:18-16d/JST:8-16d | 1,700 | N/A |
| T | CONNECTORS TO BE SPECIFIED & PROVIDED BY TRUSS MANUFACTURERS | | | |

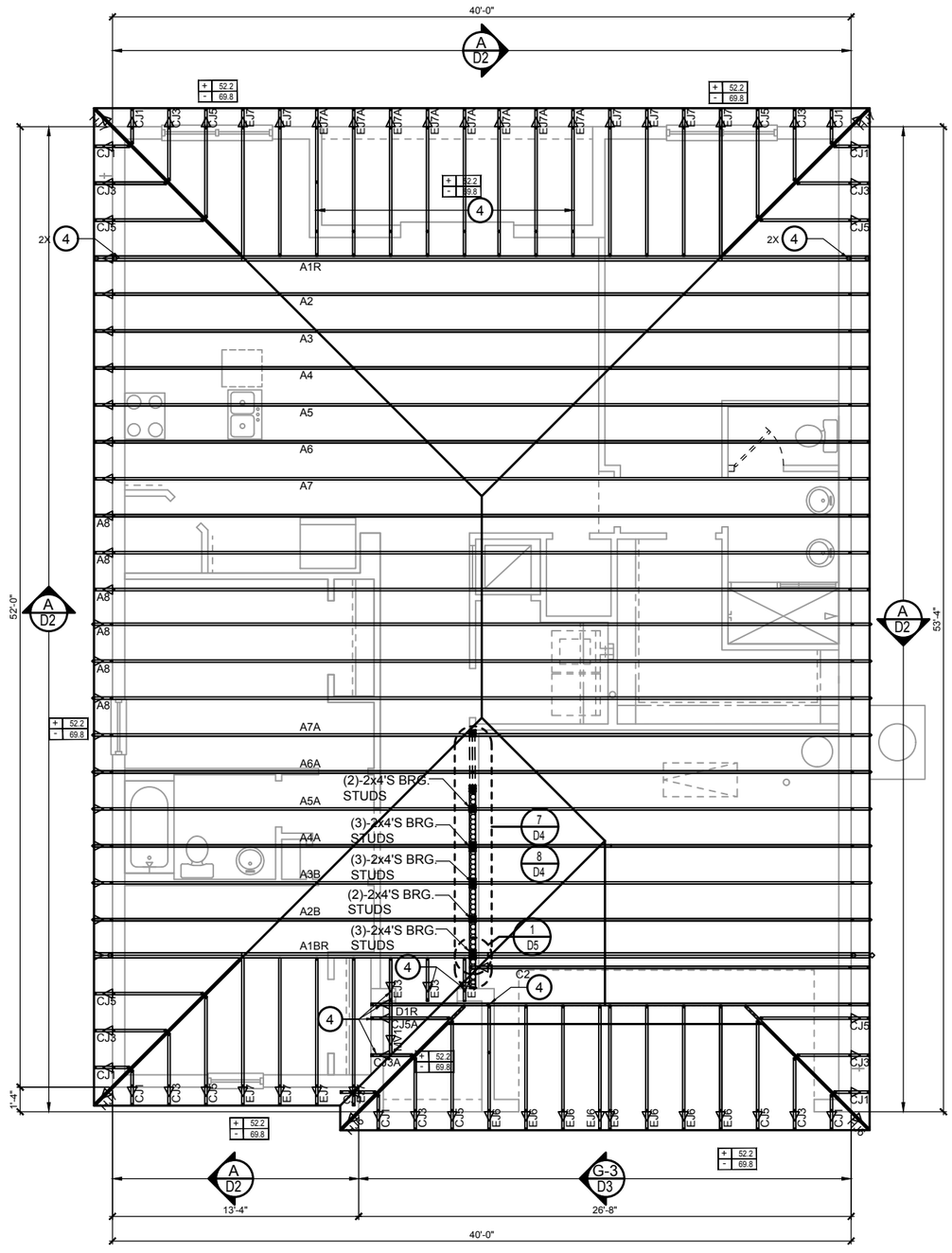


## WALL KEY

T.O.WALL 8'-8"

## COMPONENT & CLADDING DESIGN WIND PRESSURES

SEE PLAN DESIGN WIND PRESSURE

| | |
|---|---|
| + XXX | ULTIMATE DESIGNED POSITIVE PRESSURE |
| - XXX | ULTIMATE DESIGNED NEGATIVE PRESSURE |

NOTE: DESIGN PRESSURES BASED ULTIMATE WIND SPEED TO OBTAIN NOMINAL "ASD" WIND PRESSURES MULTIPLY VALUES SHOWN BY A FACTOR OF 0.6

## FIELD REPAIR NOTES

**1-** MISSED FOOTING DOWELS MAY BE SUBSTITUTED W/ A STRAIGHT #5 REBAR SET IN A 3/4" DIA. x 6" DEEP HOLE FILLED W/ UNITEX PROPOXY 300 OR SIMPSON SET OR ETF ADHESIVES.

**2-** BLOCK WALL OVERHANGING SLAB CONDITION: UP TO 7/8" - NO REPAIR NECESSARY 7/8" TO 1¼" - ADD FILLED CELL (NO VERTICAL STEEL) MIDPOINT OF WALL BETWEEN EXISTING FILLED CELLS (WITH STEEL) IN AREAS AFFECTED. 1¼"+ - REQUIRE SPECIAL ENGINEERING LETTER.

**3-** PENETRATION OF PLUMBING PIPES/DRYER VENTS THRU PLATES OF A LOAD BEARING WALL MAY OCCUR PROVIDED DBL. STUDS ARE ADDED ON EITHER SIDE OF PENETRATION WITHIN 3" AND TRUSS/FLOOR TRUSS IS NO CLOSER THAN 3" FROM PENETRATION. ADD (1) MTS12 @ TOP AND BOTTOM PLATE

## NOTES

1. TYPICAL ROOF GABLE OVERHANG TO BE 12" UNLESS OTHERWISE NOTED.

2. TYPICAL ROOF EAVES OVERHANG TO BE 16" UNLESS OTHERWISE NOTED.

3. PROVIDE AND INSTALL FLASHING AND ROOFING AS PER NATIONAL ROOFING AND SHEET METAL ASSOC.STANDARDS AND/ OR ACCEPTABLE INDUSTRY PRACTICE AND IN ACCORDANCE WITH 8TH EDITION (2023)FLORIDA RESIDENTIAL CODE.

4. ALL ROOF TRUSSES, GIRDERS, BEAMS, HEADERS, ETC. TO BE SIZE BY TRUSS MANUFACTURER OR FL. REG. ENG.

5. TRUSSES SHALL BE BRACED TO PREVENT ROTATION & PROVIDE LATERAL STABILITY KIN ACCORDANCE WITH THE REQUIREMENTS SPECIFIED IN THE CONSTRUCTION DOCUMENTS FOR BUILDING & ON THE INDIVIDUAL TRUSS DESIGN DRAWINGS IN THE ABSENCE OF SPECIFIC BRACING REQUIREMENTS, TRUSSES SHALL BE BRACED IN ACCORDANCE WITH TPI/WTCA BCSI 1.

6. REFER TO TRUSS MANUFACTURERS DRAWINGS FOR TRUSS PLACEMENT & TRUSS TO TRUSS CONNECTIONS.

7. ROOF UNDERLAYMENT TO BE USED IS 30 LBS. SYNTHETIC FELT.

8. SHINGLE ROOF : UNDERLAYMENT TO BE INSTALLED IAW FBCR 2023, 8TH EDITION R905.1.1.1 UNDERLAYMENT MATERIALS REQUIRED TO COMPLY WITH ASTM D226, D1970, D4869 AND D6757 SHALL BEAR A LABEL INDICATING COMPLIANCE TO THE STANDARD DESIGNATION AND, IF APPLICABLE, TYPE CLASSIFICATION INDICATED IN TABLE R905.1.1.1 UNDERLAYMENT SHALL BE APPLIED AND ATTACHED IN ACCORDANCE WITH TABLE R905.1.1.1

9. OFF RIDGE VENTS MAXIMUM OPENING SIZES: REFER TO MANUFACTURE SPECIFICATIONS.

# ROOF FRAMING PLAN

C (STANDARD)

1/8"=1'-0" (11x17) 1/4"=1'-0" (22x37)


THIS STRUCTURE IS DESIGNED IN ACCORDANCE WITH THE 8th EDITION, 2023 OF THE FLORIDA BUILDING CODE-RESIDENTIAL AND IS CERTIFIED AS SUCH

PARK SQUARE HOMES RESERVES COPYRIGHT & OTHER RIGHTS RESTRICTING THESE DOCUMENTS TO THE ORIGINAL SITE OR PURPOSE FOR WHICH THEY WERE PREPARED. REPRODUCTIONS, CHANGES OR ASSIGNMENTS ARE PROHIBITED.


LOT: 0000, COMMUNITY


Park Square HOMES

A DIVISION OF PARK SQUARE ENTERPRISES, INC.
5200 Vineland Road, Suite 200
Orlando, Florida 32811
Phone: (407) 529 - 3000

TEG
THOMPSON ENGINEERING GROUP, INC
8401 Vineland Road Suite A6 Orlando, FL 32811
Phone: (407) 734-1790
Fax: (407) 734-1790
www.tegfl.com


ROOF FRAMING PLAN

1585 CRUSADE

40' EXPLORATION SERIES

| REVISIONS | |
|---|---|
| DELTA # | DATE |
| | |

DATE: 09-05-25

SCALE: AS NOTED

DRAWN: MW

SHEET: S3


DISCLAIMER: CONTRACTOR/SUB-CONTRACTOR IS RESPONSIBLE TO REVIEW ALL INFORMATION CONTAINED HEREIN PRIOR TO COMMENCEMENT OF CONSTRUCTION. PARK SQUARE HOMES IS NOT RESPONSIBLE FOR ANY MISINTERPRETATIONS, ERRORS, OMISSIONS OR CUSTOM CHANGES MISSED AND NOT REPORTED PRIOR TO CONSTRUCTION. NO EXCEPTIONS.

# STRUCTURAL NOTES

1. THIS STRUCTURE HAS BEEN DESIGNED IN ACCORDANCE WITH THE 8TH EDITION, FBCR 2023 (WIND LOAD @ 133 MPH.)
   LIVE LOAD ROOF: 20 PSF.
   FLOOR: 40 PSF, BALCONIES & STAIRS: 40 PSF
   OCCUPANCY= 1.0
   BUILDING CATEGORY R3, WIND EXPOSURE C
   INTERNAL PRESSURE COEFFICIENTS = +0.18 AND -0.18
2. WINDOWS, DOORS, AND GARAGE DOORS TO BE DESIGNED TO MEET FBCR SECTION R301
3. ALL FLOOR SLABS TO BE OF 2,500 PSI CONC. PLANT MIX MIN. 4" THICK WITH 6x6 10/10 WIRE MESH 6 MIL. POLY. VAPOR-BARRIER OVER TERMITE TREATED COMPACTED CLEAN FILL.
4. CONCRETE MASONRY UNITS SHALL MEET: CH. 1-3 OF ACI 530-02/ ASCE 5-02/TMS 402-02 OR BIA BUILDING CODE REQUIREMENTS.
5. MORTAR TO BE TYPE "M" OR "S", GROUT - 2,500 PSI @ 28 DAYS.
6. MASONRY CLEAN OUTS REQUIRED @ GROUT GREATER THAN FIVE (5) FEET IN HEIGHT AND ALL VERTICALS.
7. REBAR TO BE # 5'S GRADE 60, W/ MIN. LAP OF 25". USE "L" BARS @ CORNERS AND USE STANDARD HOOKS @ CHANGE IN DIRECTION WITH MIN. LAP 12"
8. GYP. BD. CEILING SHALL BE INSTALLED PERP. TO FRAMING & NAILED @ 7" O.C. WITH 5d NAILS. GYP. BD. WALLS SHALL BE NAILED @8" O.C. WITH 5d NAILS
9. UPLIFT CONNECTOR'S TO PROVIDE CONTINUITY FROM ROOF TRUSSES THRU PLATES TO SLAB AND FOUNDATION PER ENCLOSED DETAILS.
10. EPOXY ANCHOR ALTERNATIVE:
    THREADED ANCHOR ROD MAY BE USED IN LIEU OF ANCHOR BOLTS FOR USE AS PLATE ANCHORS OR HURRICANE ANCHORS.
    THE FOLLOWING CRITERIA MUST BE MET:

| ANCHOR SIZE | CONC. HOLE SIZE | MIN. HOLE DEPTH |
|---|---|---|
| ½" | -3/4" | 7" |
| -5/8" | -7/8" | 7" |
| -3/4" | 1" | 8" |
| -7/8" | 1-1/8" | 9" |

    AFTER HOLE IS DRILLED, ALL CONCRETE DUST MUST BE REMOVED PRIOR TO EPOXY INSTALLATION. THREADED ROD TO BE MIN. A36 STEEL AND FREE OF DIRT OR GREASE. LOAD ON ROD CANNOT BE APPLIED UNTIL 12 HOURS AFTER INSTALLATION. 2 COMPONENT EPOXY RESIN MATERIAL TO BE MIXED PER MFG. DIRECTIONS.
11. SOIL BEARING CAPACITY 2000 PSF MINIMUM

# WOOD STRUCTURAL NOTES

1. ALL WOOD TO BE SPECIES, GROUP, AND GRADE AS NOTED BELOW. DAMAGED WOOD NOT TO BE USED.
2. ALL STRUCTURAL LUMBER SHALL BE SPF (SPRUCE-PINE-FIR) #2 OR BETTER UNLESS OTHERWISE NOTED. (PRE ENG. TRUSSES EXCLUDED)
3. END JOINT IN STRUCTURAL DOUBLE TOP PLATE TO BE OFFSET AT LEAST 4". STRUCTURAL DOUBLE PLATES TO BE NAILED @ 6" O.K..
4. PLYWOOD OR OSB. WALL SHEATHING NAIL PATTERN TO BE 10d @ 6" O.C.. UNLESS OTHERWISE NOTED.
5. NUMBER OF HEADER STUDS AND ADJACENT FULL LENGTH STUDS PER WALL AND HEADER STUD REQUIREMENT SCHEDULE.
6. MAX. 1" HOLE DRILLED INTO EXTERIOR STRUCTURAL STUDS.
7. DBL. STUDS @ EA. END OF SHEAR WALL.
8. WHEN ANCHORING MULTIPLE WD. ITEMS TOGETHER, THE LENGTH OF HURRICANE STRAP MUST BE CENTERED.
9. NAIL PATTERN
   -DOUBLE PLATE 12" O.C.. OUTSIDE SPLICE ZONE ( SEE NOTE 4 )
   -DOUBLE STUDS @ 12" O.C..
   -DOUBLE OR TRIPLE HEADER @ 6" O.C.. @ EDGE @ 12" O.C.. INTERMEDIATE.
   -HEADER TO STUD @ 4" O.C.. EA. HEADER MEMBER.
   -STUD TO TOP OR BOTTOM PLATE : (2) 16d THRU PLT. OR (2) 16d EA. SIDE TOE NAILED TO PLT.
10. -ROOF SHEATHING FOR SHINGLE ROOF TO BE MIN. 15/32 OSB, NAILED (10d RING SHANK NAILS) TO ROOF TRUSSES SPACED @ 24" O.C. (MAX) WITHOUT BLOCKING.
    -ROOF SHEATHING FOR TILE ROOF TO BE MIN. 19/32" OSB, 1/2" CDX PLYWOOD OR 1/2" ADVANTECH. NAILED (10d RING SHANK NAILS)TO ROOF TO ROOF TRUSS SPACED @ 24" O.C. (MAX) WITHOUT BLOCKING.
11. FLOOR SHEATHING TO BE MIN. 23/32" PLYWOOD NAILED @ 6" O.C. W/ #8 RING SHANK NAILS AND LIQUID NAIL ADHESIVE.
12. ALL FLOOR TRUSSES TO BE END BLOCKED @ BEARING LOCATIONS
13. TRUSS BRACING PER TRUSS MANUFACTURE'S DRAWINGS.
14. ALL NAILING SPECIFIED TO BE APPLIED BY NAIL GUN OR MANUALLY
15. ALL WOOD IN DIRECT CONTACT WITH MASONRY SHALL BE PRESSURE TREATED.
16. 2000 PSF MINIMUM SOIL BEARING CAPACITY
17. NON BEARING WALL: 2X4 SPACED AT 24" O.C. UP TO 12'-0" HEIGHT WITH 2 ROWS OF HORIZONTAL 2X4 BLOCKING SPACE AT 4'-0" O.C.

**GENERAL CONTRACTOR:**

IT IS RESPONSIBILITY OF THE GENERAL CONTRACTOR TO INSTALL ALL MATERIALS MEETING FLORIDA APPROVAL COMPLIANCE TO AVOID WATER INTRUSION AND MOISTURE INTRUSION ON WINDOWS, DOORS, ROOF, AND ANY OTHER AREA AROUND EACH UNIT/ HOUSE/ APARTMENT/ CONDOMINIUM/ TOWNHOUSE.

# FIELD REPAIR NOTES

1. MISSED LINTEL STRAPS FOR MASONRY CONSTRUCTION MAY BE SUBSTITUTED W/ (1) USP MTW16 OR HC10 OR SIMPSON MTSM16 W/ (4) -1/4" X 2-1/4" TAPCONS TO BOND BEAM AND (7) 10d NAILS TO TRUSS FOR UPLIFTS LESS THAN 860 LBS (USE (2) MTSM16 FOR UPLIFTS LESS THAN 1720#). NO MORE THAN 10 STRAPS MAY BE SUBSTITUTED OR NO MORE THAN 3 IN A ROW. IF GIRGER TRUSS CONNECTIONS ARE MISSED CONTACT ENGINEER FOR SUBTITUTION.
2. MISSED J-BOLTS FOR FRAMED EXTERIOR/ BEARING WALLS MAY BE SUBSTITUTED W/ 1/2" DIA. x 7" LONG WEDGE ANCHORS (REDHEADS).
3. MISSED FOOTING DOWELS MAY BE SUBSTITUTED W/ A STRAIGHT #5 REBAR SET IN A 3/4" DIA. x 6" DEEP HOLE FILLED W/ UNITEX PROPOXY 300 OR SIMPSON SET OR ETF ADHESIVES.
4. BLOCK WALL OVERHANGING SLAB CONDITION:
   UP TO -7/8" - NO REPAIR NECESSARY
   -7/8" TO 1-1/4" - ADD FILLED CELL (NO VERTICAL STEEL) MIDPOINT OF WALL BETWEEN EXISTING FILLED CELLS (WITH STEEL) IN AREAS AFFECTED.
   1-1/4"+ - REQUIRE SPECIAL ENGINEERING LETTER.
5. PENETRATION OF PLUMBING PIPES/DRYER VENTS THRU PLATES OF A LOAD BEARING WALL MAY OCCUR PROVIDED DBL. STUDS ARE ADDED ON EITHER SIDE OF PENETRATION WITHIN 3" AND TRUSS/ FLOOR TRUSS IS NO CLOSER THAN 3" FROM PENETRATION. ADD (1) MTS12 @ TOP AND BOTTOM PLATE.

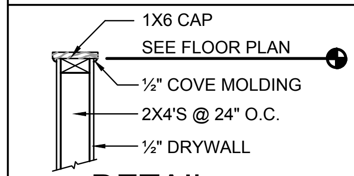


3/D1 DETAIL
1/2"= 1'-0"

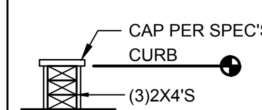


4/D1 DETAIL
1/2"= 1'-0"

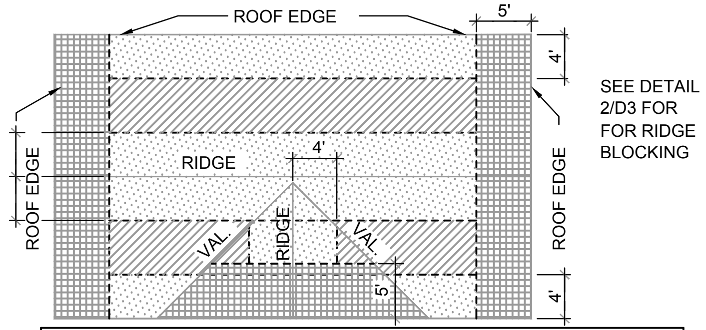


| ROOF NAILING PATTERN | | |
|---|---|---|
| ZONE: | (hatched) | 10d RING SHANK NAILS @ 6" O.C. EDGES AND 6" O.C. FIELD |
| ZONE: | (dotted) | 10d RING SHANK NAILS @ 6" O.C. EDGES AND 6" O.C. FIELD |
| ZONE: | (solid) | 10d RING SHANK NAILS @ 4" O.C. EDGES AND 6" O.C. FIELD |

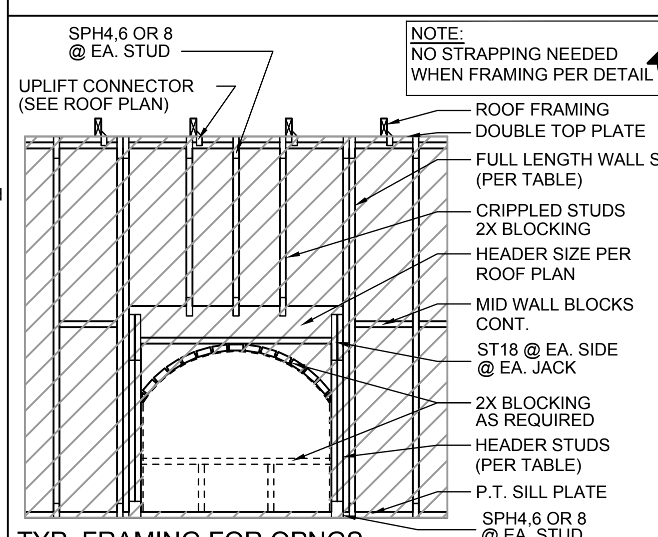


TYP. FRAMING FOR OPNGS.

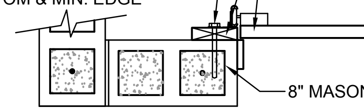


- DETAIL TO SATISFY 150 MPH WIND LOAD
- MASONRY FRAME SHALL BE MIN 8X16 ASTM C-9D
- GROUT FILLED CELL W/½" ASTM 2 #5 REBAR (GRADE 60) @ EA. SIDE OF GARAGE DOOR OPENING
- MAX. DISTANCE TO CORNER OF C.B.S. WALL REINF. 48"
- REINF. TO BE CONT. FROM FTG. TO TIE BEAM W/ ALL "ACI" DETAILS & DEVELOPMENT LENGTHS ADHERED TO
- GARAGE DOOR MANUF. TO PROVIDE ATTACHMENT TO "BUCK"

1.) THE GARAGE DOOR ASSEMBLY SHALL BE DESIGNED FOR POSITIVE AND NEGATIVE WIND PRESSURES OF 25 PSF IN ACCORDANCE WITH SECTION R301 OF THE FLORIDA RESIDENTIAL CODE CERTIFICATION SHALL BE SUBMITTED FROM THE GARAGE DOOR MANUFACTURER TO THE BUILDING DEPARTMENT FOR THE FOLLOWING ITEMS:
   A.) THE DESIGN OF THE DOOR CAN WITHSTAND POSITIVE AND NEGATIVE WIND PRESSURES OF 25 PSF.
   B.) THE DESIGN OF THE DOOR COMPLIES WITH THE CRITERIA SPECIFIED IN SECTION R609 OF THE 2023 FLORIDA BUILDING CODE RESIDENTIAL, 8TH EDITION
   C.) DOOR SIZE, TYPE AND GLAZING
   D.) TRACK SIZE AND FASTENER DETAILS.
   E.) TRACK BRACKET QUANTITY, SPACING AND FASTENER DETAILS.
   F.) REINFORCING MEMBER QUANTITY, LOCATION, SIZE, TYPE AND FASTENER DETAILS. (IF REQUIRED)

## GARAGE BUCK DETAIL

1"= 1'-0"

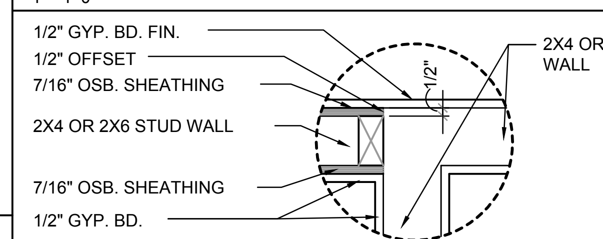


7A/D1 DETAIL @ CONN. TO REG. WALL
1"= 1'-0"

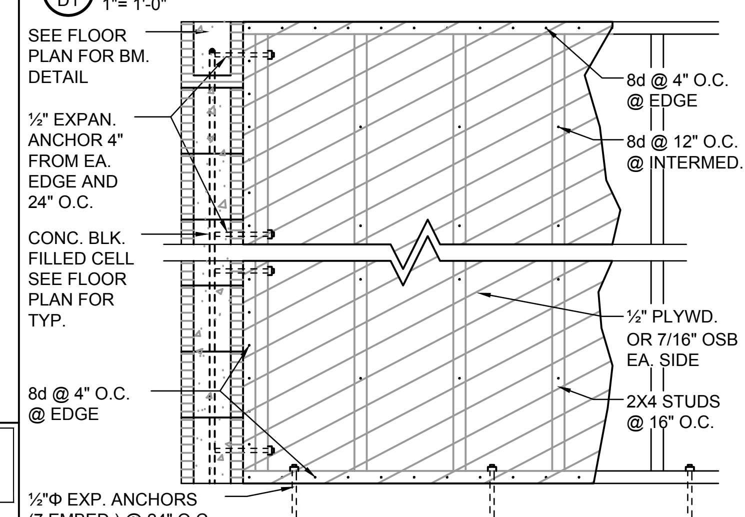


7/D1 SHEAR WALL DETAIL
1/2"= 1'-0"
USE ONLY WHEN NOTED AS SHEAR WALL ON PLANS

## MIN. WALL AND HEADER REQUIREMENTS

| UNSUPPORTED WALL HEIGHT / STUD SPACING | MAXIMUM HEADER SPAN (ft.) 3' | 6' | 9' | 12' | 15' | 18' |
|---|---|---|---|---|---|---|
| NUMBER OF HEADER STUDS SUPPORTING END OF HEADER | 1 | 1 | 2 | 2 | 2 | 2 |
| NUMBER OF FULL-LENGTH STUDS @ EACH END OF HEADER | | | | | | |
| 10' OR LESS | 2 | 2 | 3 | 3 | 3 | 3 |
| GREATER THAN 10' | 2 | 2 | 3 | 4 | 5 | 5 |

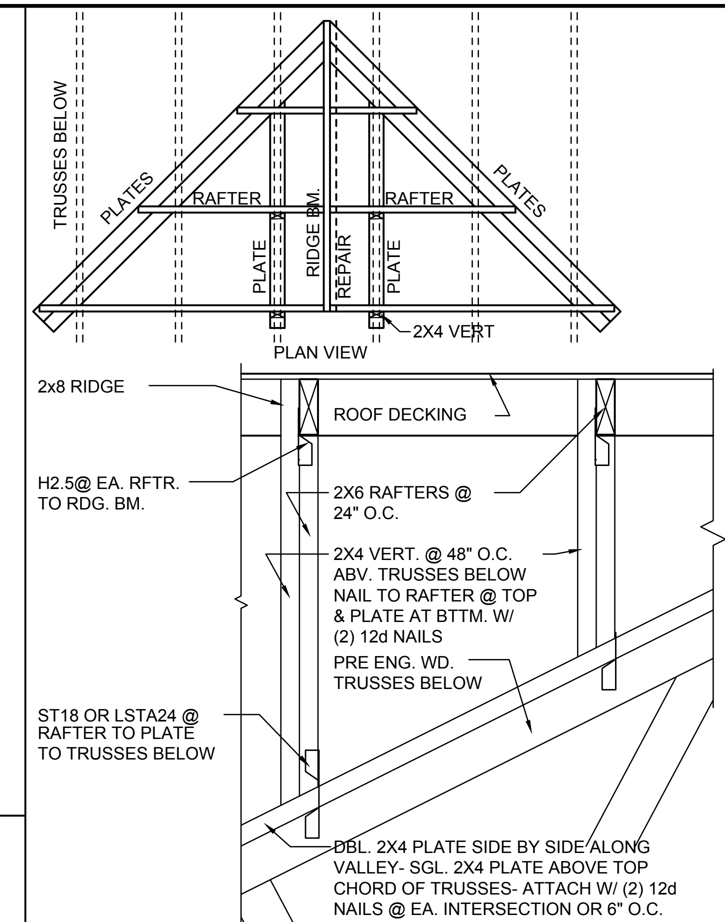


NOTE:
IF RIDGE BEAM IS UNDERSIZED-CUT 1 1/2" FROM END OF RAFTERS ON ONE SIDE AND ADD 2X8 NEXT TO FIRST ONE W/12d'S @ 6" O.C.

8/D1 VALLEY DETAIL
-3/4" = 1'-0"

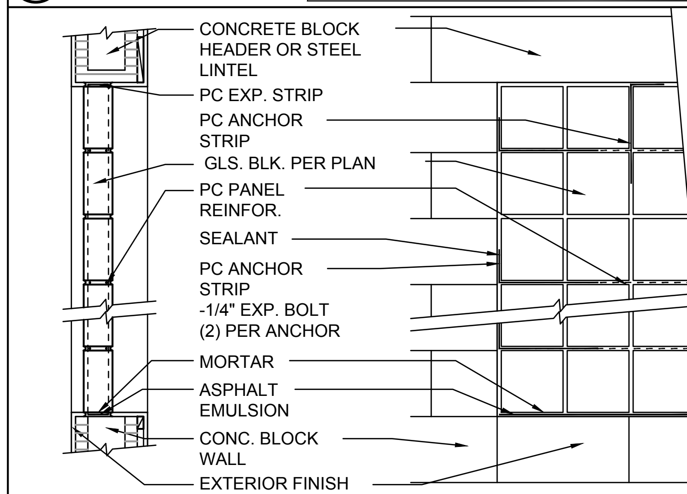


## PANEL ANCHOR CONSTRUCTION

PC PANEL REINFORCING (TOP):
USED IN PANELS OVER 25"S.F. IN AREA,IS EMBEDDED HORIZONTALLY IN THE MORTAR JOINTS BETWEEN EVERY OTHER COURSE. PANEL REINFORCING IS FORMED OF TWO PARALLEL WIRES, EITHER 1-5/8" O.C. (FOR USE WITH "THINLINE" SERIES GLS. BLK.) OR 2" O.C. (FOR USE W/ "PREMIERE" SERIES GLS. BLK.), W/ BUTT WELDED CROSSWIRES AT REGULAR INTERVALS. 4' AND 10' LENGTHS AVAILABLE.

PC PANEL ANCHORS (MIDDLE):
ARE USED TO TIE PITTSBURGH CORNING GLASS BLOCK PANELS INTO THE SURROUNDING FRAMEWORK WHEN CHANNELS ARE NOT USED. FORMED FROM 20 GAUGE PERFORATED- THEN GALVANIZED STEEL STRIPS, PANEL ANCHORS ARE AVAIL. IN 1-3/4" WIDTHS X 24" LENGTHS.

PC EXPANSION STRIPS (BOTTOM):
MADE OF WHITE POLYETHYLENE, ARE INSERTED AT THE HEAD AND THE STRIPS REPLACE MORTAR AT THESE POINTS TO CUSHION THE GLASS BLOCK AND ALLOW THE PANEL TO EXPAND & CONTRACT FREELY. FOR METAL CHANNEL OR MASONRY CHASE CONSTRUCTION, PC EXPANSION STRIPS ARE AVAILABLE 3/8" THICK X 4" WIDE X 24" LONG. FOR PANEL ANCHOR CONSTRUCTION, STD. 4" WIDE STRIPS ARE EASILY CUT TO 3" WIDTH, FOR 3-7/8" "PREMIERE" SERIES BLK., AND TO 2-1/4" WIDTH, FOR 3-1/8" "THINLINE" SERIES BLOCK.

6/D1 GLASS BLOCK DETAIL

THIS STRUCTURE IS DESIGNED IN ACCORDANCE WITH THE 8th EDITION, 2023 OF THE FLORIDA BUILDING CODE-RESIDENTIAL AND IS CERTIFIED AS SUCH

LOT: 0000, COMMUNITY

PARK SQUARE HOMES RESERVES COPYRIGHT & OTHER RIGHTS RESTRICTING THESE DOCUMENTS TO THE ORIGINAL SITE OR PURPOSE FOR WHICH THEY WERE PREPARED. REPRODUCTIONS, CHANGES OR ASSIGNMENTS ARE PROHIBITED.

TEG THOMPSON ENGINEERING GROUP, INC
4401 Vineland Road Suite A6 Orlando, FL. 32811
Ph: (407) 734-1450
Fax: (407) 734-1790
www.tegfl.com

Park Square HOMES
A DIVISION OF PARK SQUARE ENTERPRISES, INC.
5200 Vineland Road, Suite 200
Orlando, Florida 32811
Phone: (407) 529 - 3000

STRUCTURAL NOTE & DETAILS

1585 CRUSADE

40' EXPLORATION SERIES

| REVISIONS | |
|---|---|
| DELTA # | DATE |
| | |

DATE: 09-05-25
SCALE: AS NOTED
DRAWN: MW
SHEET: D1

DISCLAIMER: CONTRACTOR/SUB-CONTRACTOR IS RESPONSIBLE TO REVIEW ALL INFORMATION CONTAINED HEREIN PRIOR TO COMMENCEMENT OF CONSTRUCTION. PARK SQUARE HOMES IS NOT RESPONSIBLE FOR ANY MISINTERPRETATIONS, ERRORS, OMISSIONS OR CUSTOM CHANGES MISSED AND NOT REPORTED PRIOR TO CONSTRUCTION. NO EXCEPTIONS.

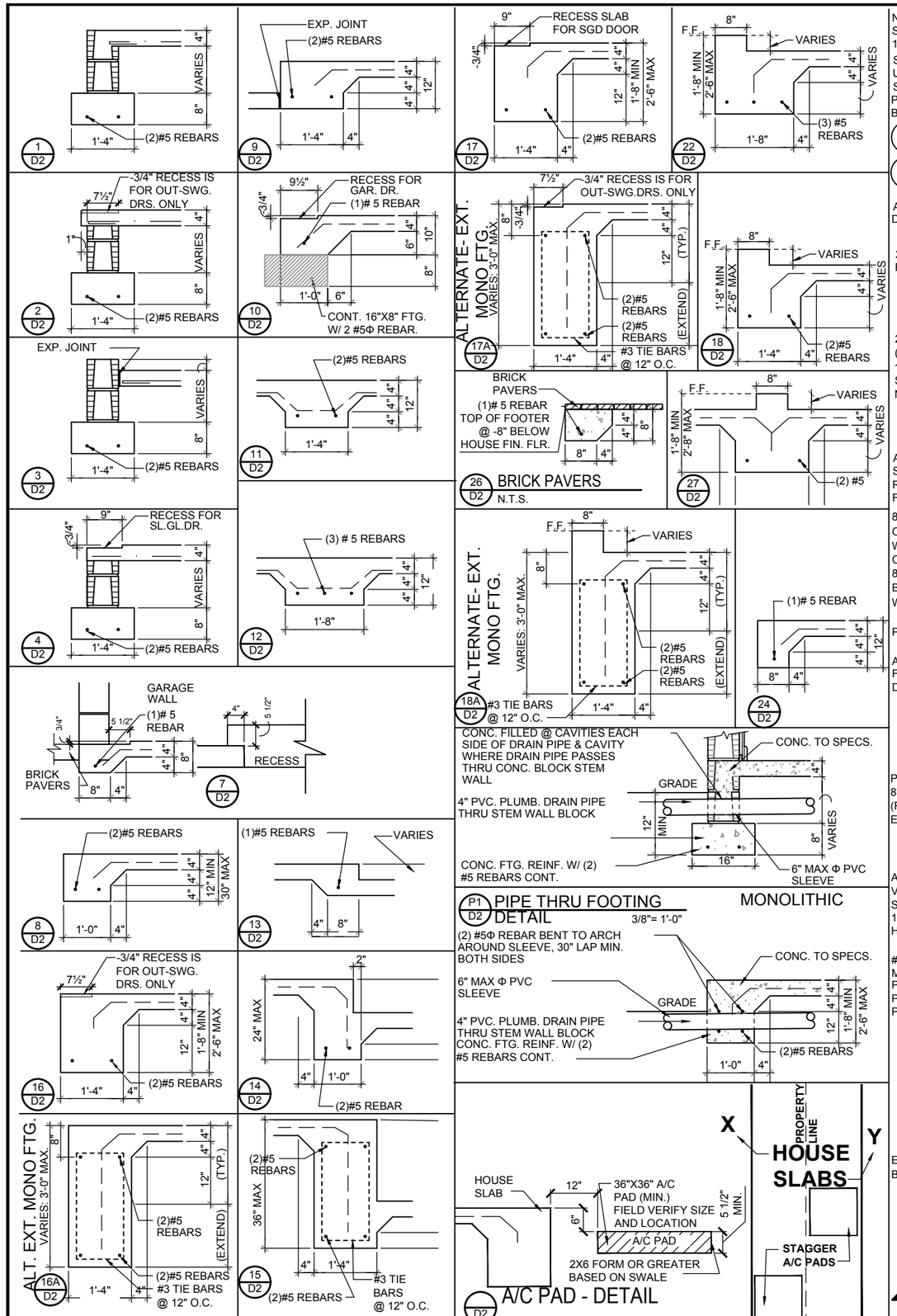


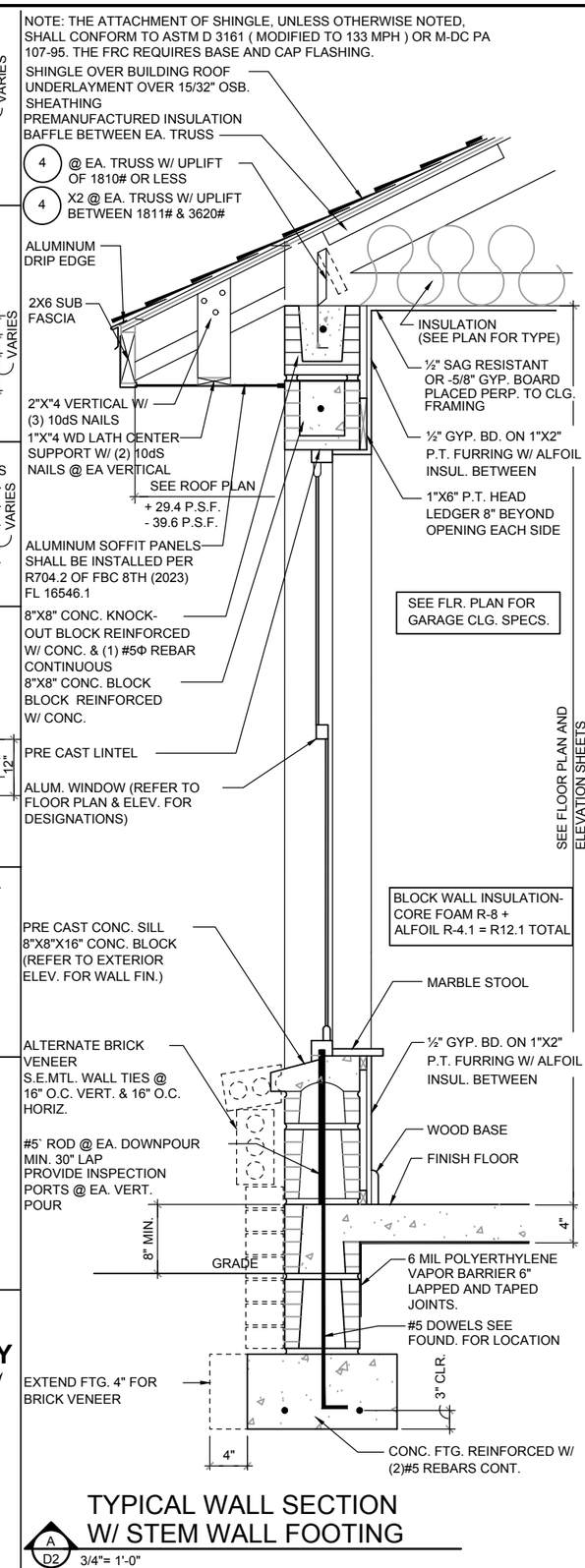


TYPICAL WALL SECTION W/ STEM WALL FOOTING

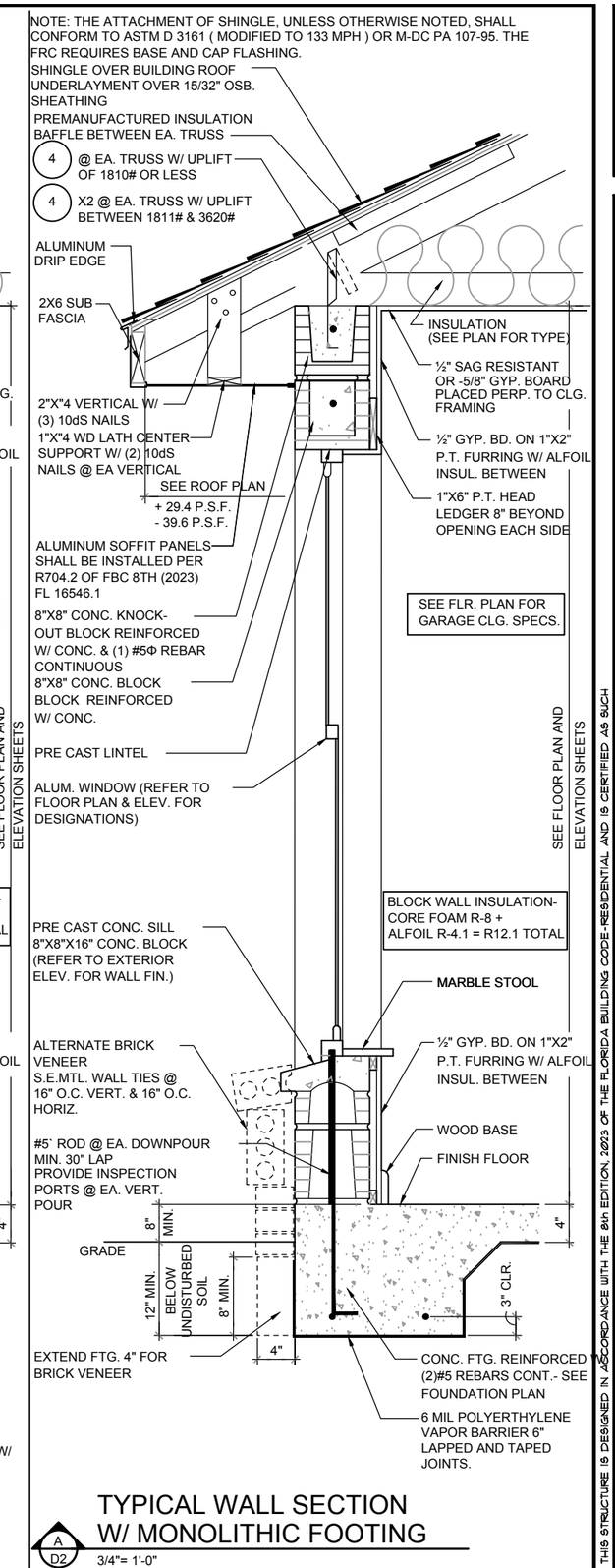


TYPICAL WALL SECTION W/ MONOLITHIC FOOTING

DISCLAIMER: CONTRACTOR/SUB-CONTRACTOR IS RESPONSIBLE TO REVIEW ALL INFORMATION CONTAINED HEREIN PRIOR TO COMMENCEMENT OF CONSTRUCTION. PARK SQUARE HOMES IS NOT RESPONSIBLE FOR ANY MISINTERPRETATIONS, ERRORS, OMISSIONS OR CUSTOM CHANGES MISSED AND NOT REPORTED PRIOR TO CONSTRUCTION. NO EXCEPTIONS.

THIS STRUCTURE IS DESIGNED IN ACCORDANCE WITH THE 8th EDITION, 2023 OF THE FLORIDA BUILDING CODE-RESIDENTIAL AND IS CERTIFIED AS SUCH

PARK SQUARE HOMES RESERVES COPYRIGHT + OTHER RIGHTS RESTRICTING THESE DOCUMENTS TO THE ORIGINAL SITE OR PURPOSE FOR WHICH THEY WERE PREPARED. REPRODUCTIONS, CHANGES OR ASSIGNMENTS ARE PROHIBITED.

TEG
THOMPSON ENGINEERING GROUP, INC
4401 Vineland Road Suite A6 Orlando, FL 32811
Phone: (407) 734-7160
Fax: (407) 734-7790
www.tegfl.com

Park Square HOMES
A DIVISION OF PARK SQUARE ENTERPRISES, INC.
5200 Vineland Road, Suite 200
Orlando, Florida 32811
Phone (407) 529 - 3000

LOT: 0000, COMMUNITY

# STRUCTURAL DETAILS

1585 CRUSADE

40' EXPLORATION SERIES

| REVISIONS | |
|---|---|
| DELTA # | DATE |
| | |
| | |

DATE: 09-05-25

SCALE: AS NOTED

DRAWN: MW

SHEET: D2

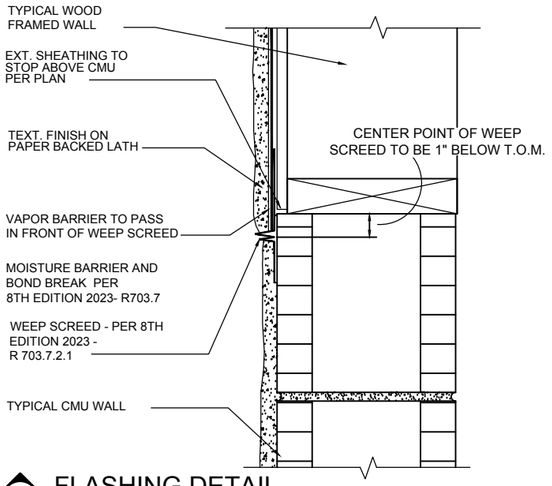


A / D3 FLASHING DETAIL

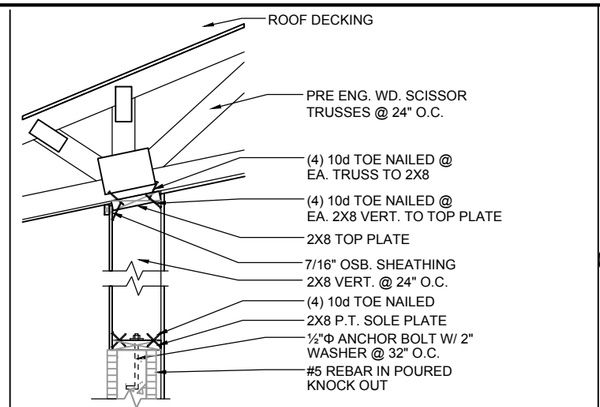


G-6 / D3 NON-BEARING

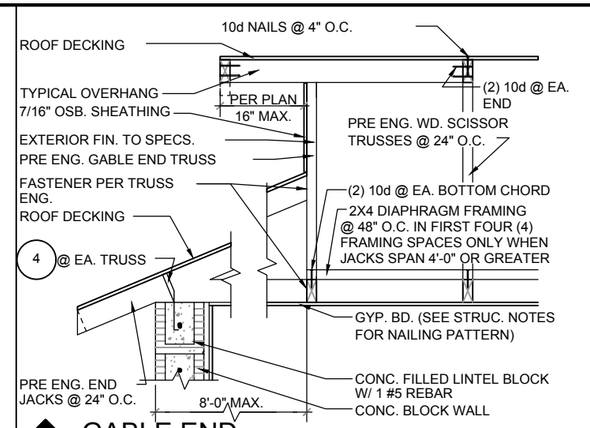


G-3 / D3 GABLE END

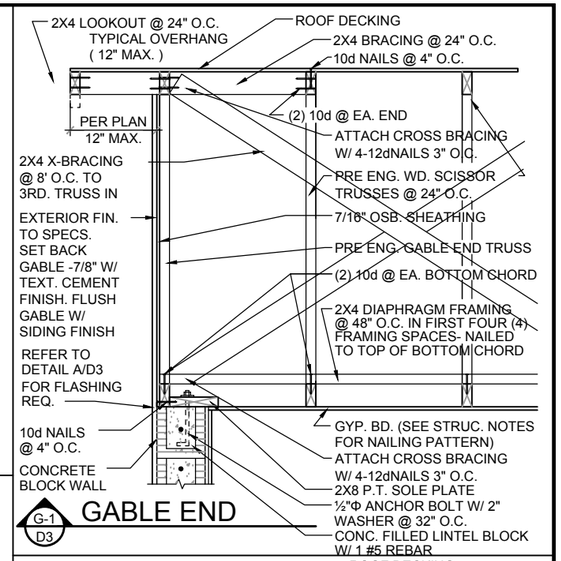


G-1 / D3 GABLE END

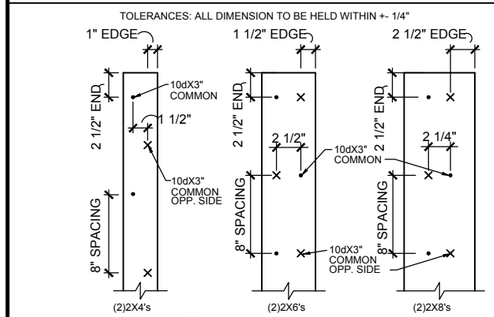


B 2X BUILT-UP STUD COLUMN DETAILS

1½"=1'-0"

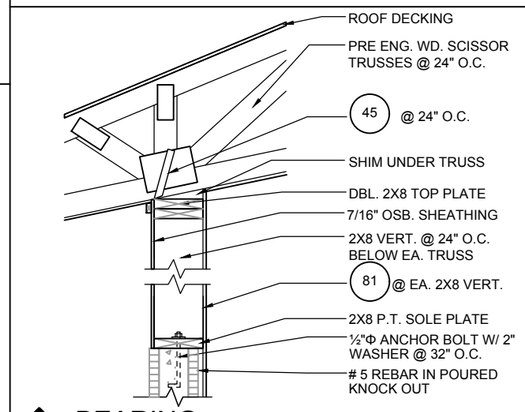


G-7 / D3 BEARING

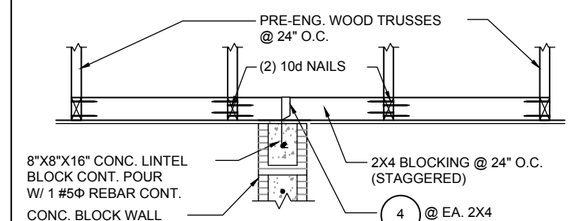


G-4 / D3 DETAIL

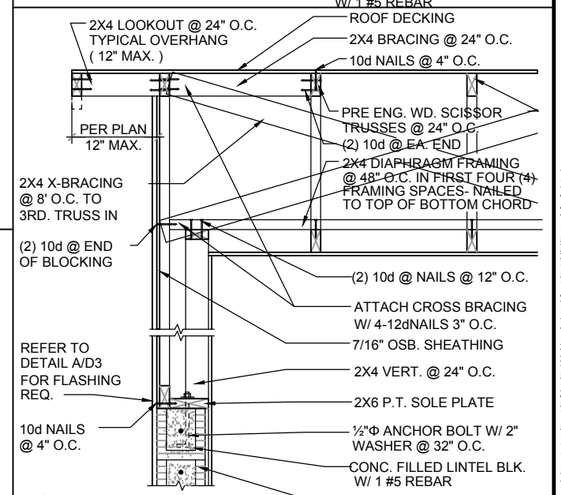


G-2F / D3 GABLE END

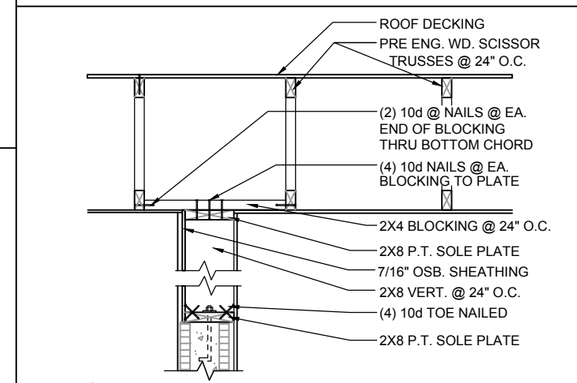


G-5 / D3 GABLE END

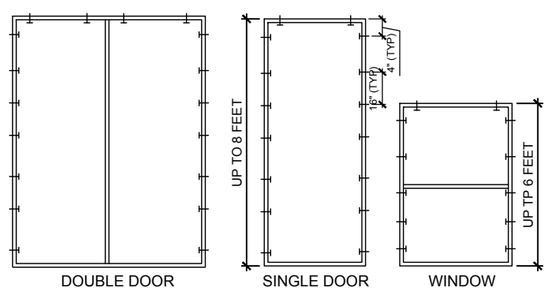


FOR MULTIPLE WINDOWS AND DOORS USE 2 TAPCONS PER WINDOW AT THE HEAD AND 4 TAPCONS AT THE JAMB.

## BUCK ATTACHMENT DATA

BUCKS SHALL BE 1x4 OR 2x8 PT AT WINDOWS OR 2x8 PT AT DOORS IN PINE OR SPRUCE. AT WINDOWS ATTACH BUCKS TO BLOCK WITH COMMON T-NAILS AND PLACEMENT SIMILAR TO TAPCONS SHOWN. AT DOORS OR FIN WINDOWS IN BLOCK, ATTACH BUCKS w/ 2 T-NAILS TOP AND BOTTOM AND 8" O.C. STAGGERED IN THE FIELD.

USE MIN. 2-1/4" T-NAILS w/ 1x BUCK. USE MIN. -1/4" x 3" TAPCONS w/ 2x BUCK. START ALL END TAPCONS WITHIN 4" OF CORNERS AND 16" ON CENTER MAXIMUM.

FOR FRAME ANCHORING USE MIN. 2-1/4" T-NAILS w/ 1x BUCK. USE MIN. -1/4" x 3" TAPCONS w/ 2x BUCK. START ALL END TAPCONS WITHIN 6" OF CORNERS AND 14" ON CENTER MAXIMUM.

## NOTE

IN CASE OF BLOCK OPENINGS LARGER THAN DOOR FRAMING: ATTACH ADDITIONAL 2X FRAMING TO THE BLOCK WALL USING 1/4" x 4" TAPCONS AT 3" FROM END AND 12" O.C. IN THE CENTER. ATTACH TOP FRAMING TO HEADER USING 1/4"x1-3/4" TAPCONS W/ (1) 6" FROM END TO END AND 12" O.C. IN THE. CENTER.

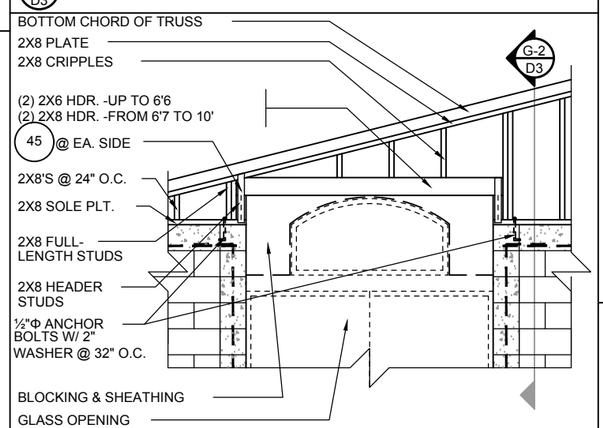


B / D3 GABLE END

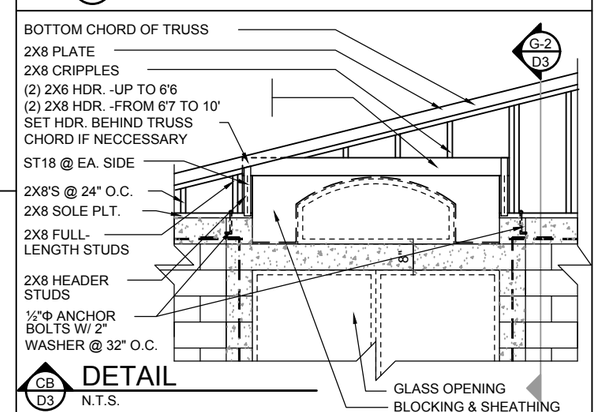


CB / D3 DETAIL

N.T.S.

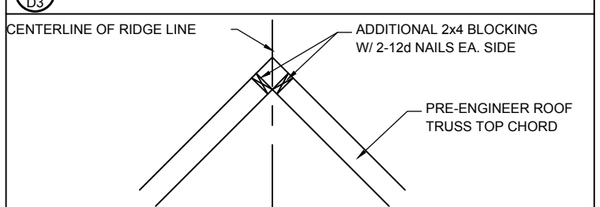


2 / D3 RIDGE DETAIL

N.T.S.

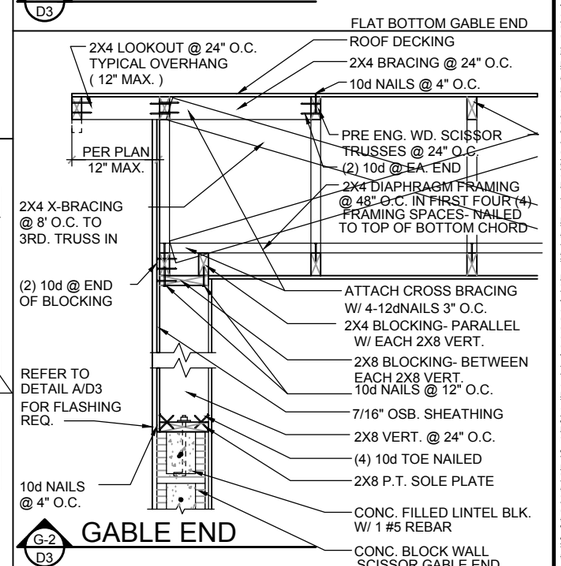


G-2 / D3 GABLE END

DISCLAIMER: CONTRACTOR/SUB-CONTRACTOR IS RESPONSIBLE TO REVIEW ALL INFORMATION CONTAINED HEREIN PRIOR TO COMMENCEMENT OF CONSTRUCTION. PARK SQUARE HOMES IS NOT RESPONSIBLE FOR ANY MISINTERPRETATIONS, ERRORS, OMISSIONS OR CUSTOM CHANGES MISSED AND NOT REPORTED PRIOR TO CONSTRUCTION. NO EXCEPTIONS.

THIS STRUCTURE IS DESIGNED IN ACCORDANCE WITH THE 8th EDITION, 2023 OF THE FLORIDA BUILDING CODE-RESIDENTIAL AND IS CERTIFIED AS SUCH

PARK SQUARE HOMES RESERVES COPYRIGHT & OTHER RIGHTS RESTRICTING THESE DOCUMENTS TO THE ORIGINAL SITE OR PURPOSE FOR WHICH THEY WERE PREPARED. REPRODUCTIONS, CHANGES OR ASSIGNMENTS ARE PROHIBITED.

TEG
THOMPSON ENGINEERING GROUP, INC
4401 Vineland Road Suite A6
Orlando, FL 32811
Ph: (407) 734-1545
Fax: (407) 734-1790
www.teg8.com

Park Square HOMES
A DIVISION OF PARK SQUARE ENTERPRISES, INC.
5200 Vineland Road, Suite 200
Orlando, Florida 32811
Phone: (407) 529 - 3000

STRUCTURAL DETAILS

1585 CRUSADE

40' EXPLORATION SERIES

LOT: 0000, COMMUNITY

| REVISIONS | |
|---|---|
| DELTA # | DATE |
| | |

DATE: 09-05-25

SCALE: AS NOTED

DRAWN: MW

SHEET: D3

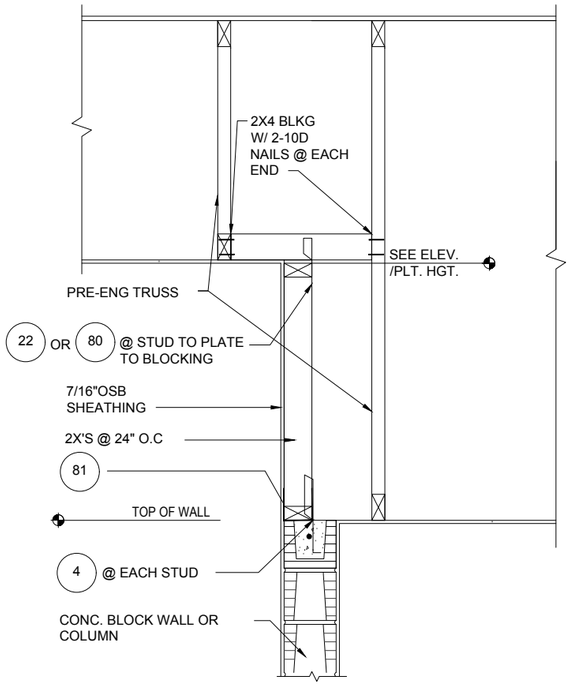


1/D4 DETAIL
1/2"=1'-0" (11X17) 1"=1'-0" (22X34)

- INDICATES TRUSS CONNECTOR, GO TO CONNECTOR SCHEDULE ON ROOF FRAMING PLAN FOR CONNECTOR NAME AND SPECIFICATION.

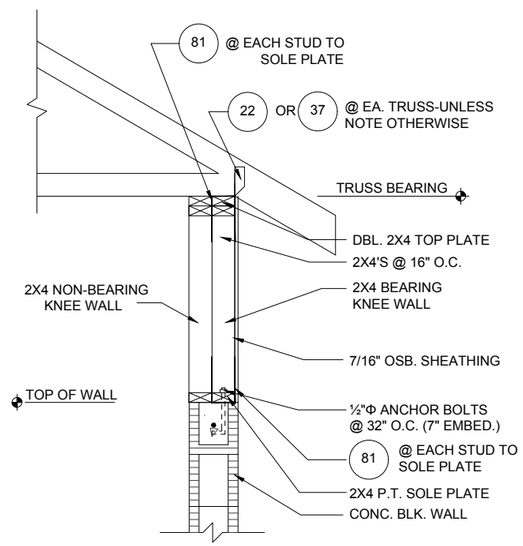


2/D4 DETAIL
1/2"=1'-0" (11X17) 1"=1'-0" (22X34)

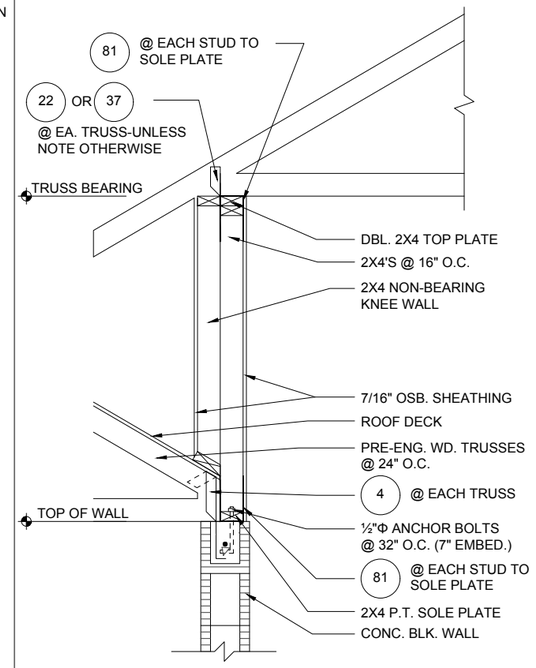


3/D4 DETAIL
1/2"=1'-0" (11X17) 1"=1'-0" (22X34)

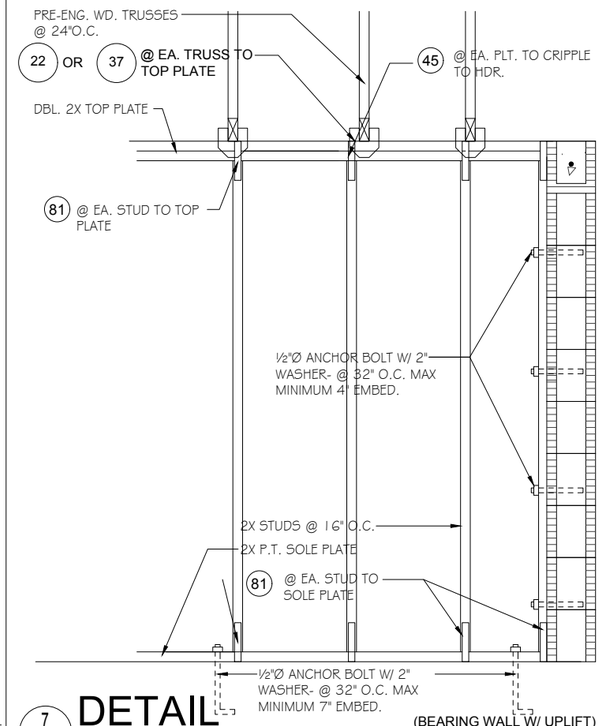


(BEARING WALL W/ UPLIFT)

7/D4 DETAIL
1/2"=1'-0" (11X17) 1"=1'-0" (22X34)

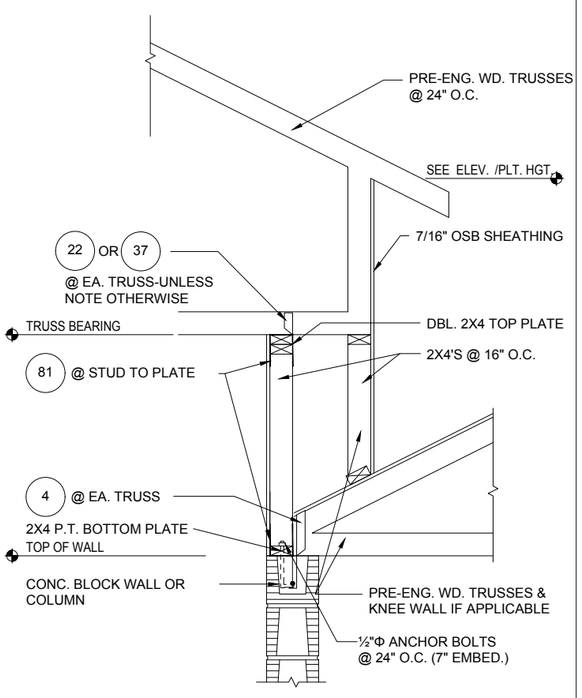


4/D4 DETAIL
1/2"=1'-0" (11X17) 1"=1'-0" (22X34)

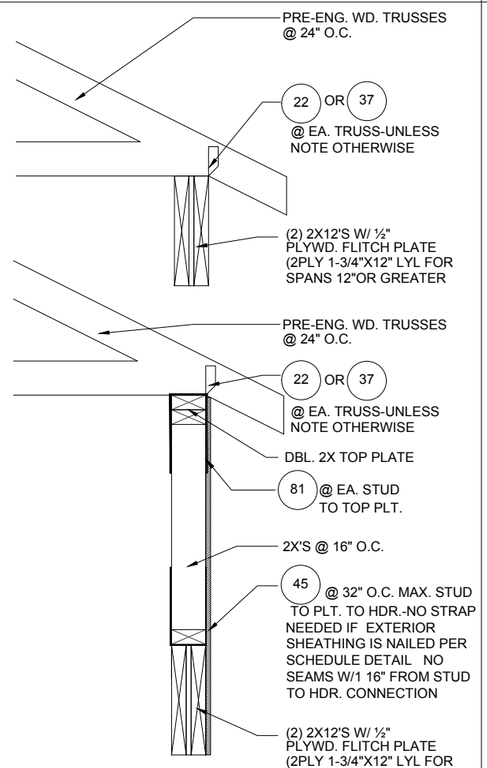


5/D4 DETAIL

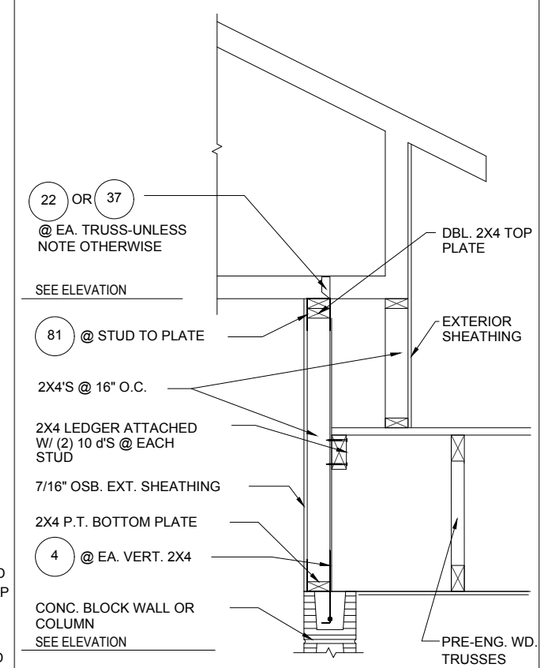


6/D4 DETAIL

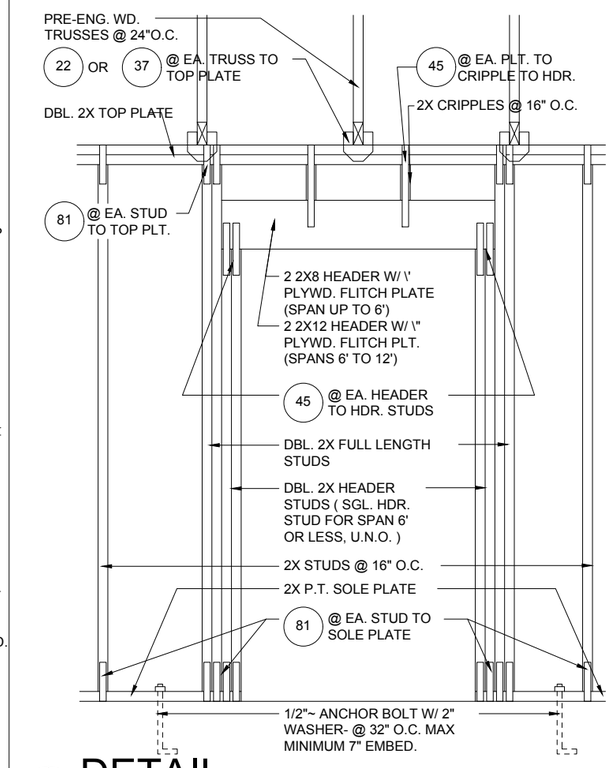


(BEARING WALL W/ UPLIFT)

8/D4 DETAIL
1/2"=1'-0" (11X17) 1"=1'-0" (22X34)

DISCLAIMER: CONTRACTOR/SUB-CONTRACTOR IS RESPONSIBLE TO REVIEW ALL INFORMATION CONTAINED HEREIN PRIOR TO COMMENCEMENT OF CONSTRUCTION. PARK SQUARE HOMES IS NOT RESPONSIBLE FOR ANY MISINTERPRETATIONS, ERRORS, OMISSIONS OR CUSTOM CHANGES MISSED AND NOT REPORTED PRIOR TO CONSTRUCTION. NO EXCEPTIONS.

THIS STRUCTURE IS DESIGNED IN ACCORDANCE WITH THE 8th EDITION, 2023 OF THE FLORIDA BUILDING CODE-RESIDENTIAL AND IS CERTIFIED AS SUCH FOR WHICH THEY WERE PREPARED. REPRODUCTIONS, CHANGES OR ASSIGNMENTS ARE PROHIBITED.
PARK SQUARE HOMES RESERVES COPYRIGHT & OTHER RIGHTS RESTRICTING THESE DOCUMENTS TO THE ORIGINAL SITE OR PURPOSE FOR WHICH

LOT: 0000, COMMUNITY

Park Square HOMES
A DIVISION OF PARK SQUARE ENTERPRISES, INC.
5200 Vineland Road, Suite 200
Orlando, Florida 32811
Phone: (407) 529 - 3000

TEG
THOMPSON ENGINEERING GROUP, INC.
14401 Vineland Road Suite A6 Orlando, FL 32811
Phone: (407) 734-1540
Fax: (407) 734-1790
www.wgtl.com

STRUCTURAL DETAILS

1585 CRUSADE
40' EXPLORATION SERIES

| REVISIONS | |
|---|---|
| DELTA # | DATE |
| | |

DATE: 09-05-25
SCALE: AS NOTED
DRAWN: MW
SHEET:
D4

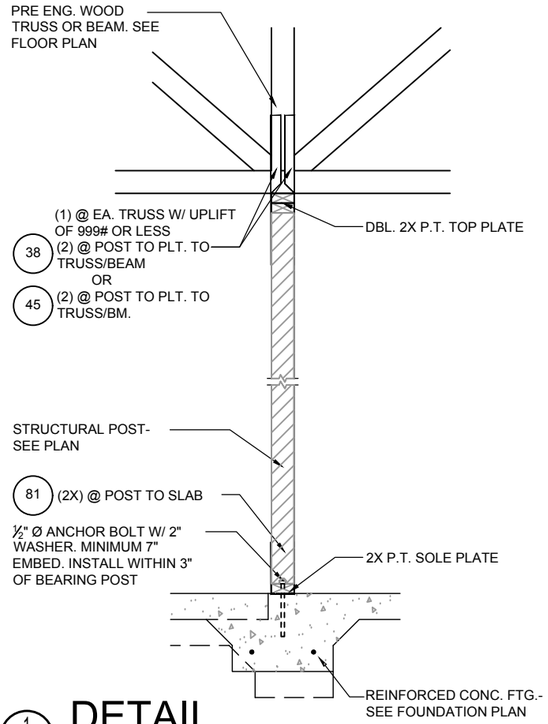


1 D5 DETAIL
1/2"=1'-0" (11X17) 1"=1'-0" (22X34)

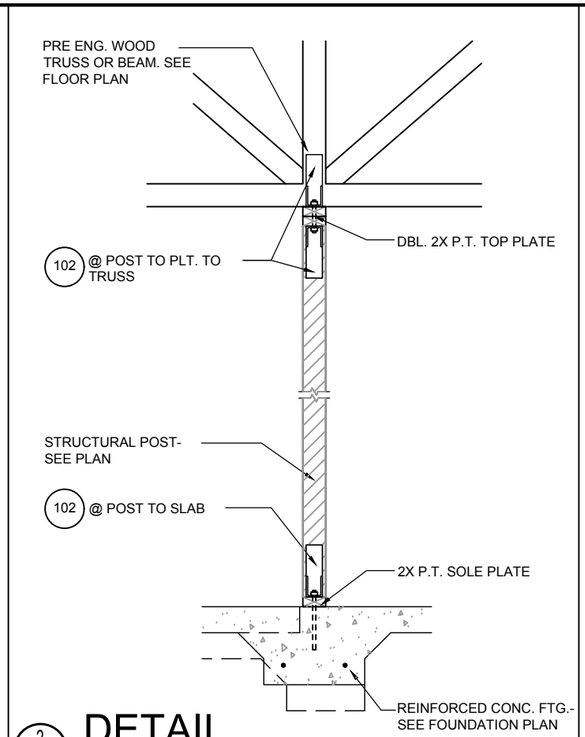


2 D5 DETAIL
1/2"=1'-0" (11X17) 1"=1'-0" (22X34)

- INDICATES TRUSS CONNECTOR, GO TO CONNECTOR SCHEDULE ON ROOF FRAMING PLAN FOR CONNECTOR NAME AND SPECIFICATION.

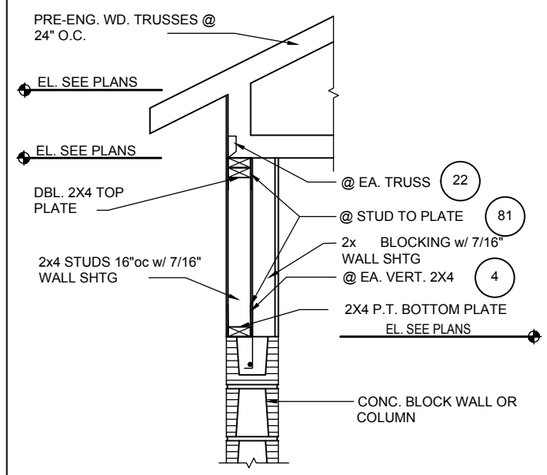


3 D5 DETAIL
1/2"=1'-0" (11X17) 1"=1'-0" (22X34)

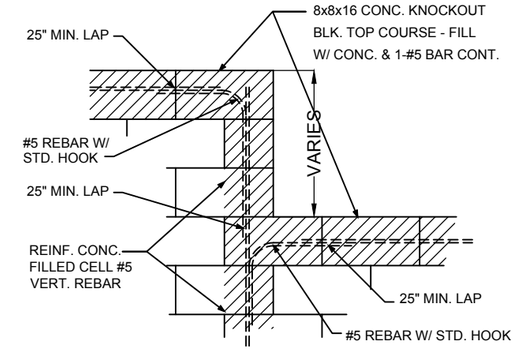


BLOCK WALL
HT. TRANSITION

4 D5 DETAIL
1/2"=1'-0" (11X17) 1"=1'-0" (22X34)

NOTE:
1/2" PLYWOOD OR 7/16" O.S.B. TO BE USED AS UPLIFT RESISTANCE NO OTHER FASTENERS REQ'D. AT STUD/FLOOR TRUSS, EXCEPT AS NOTED ON PLANS IN TWO STORY FRAME APPLICATIONS, SHEATHING SHALL EXTEND MIN. 1'-0" W/O BREAK ABV. 2nd FLOOR BOTTOM PLT. TO T.O.M.

## NAILING SCHEDULE:

(2)ROWS @ 3" O.C. AT TOP AND (1)ROW AT BOTTOM OF WALL, 6" O.C. ALL OTHER EDGES AND 12" IN FIELD. BLOCKING SHALL BE PLACED AT ALL SHEATHING JOINTS.

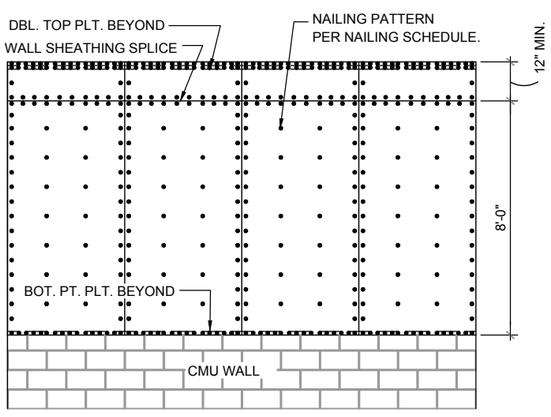


A SHEATHING ELEV.
BALLOON FRAMING N.T.S.

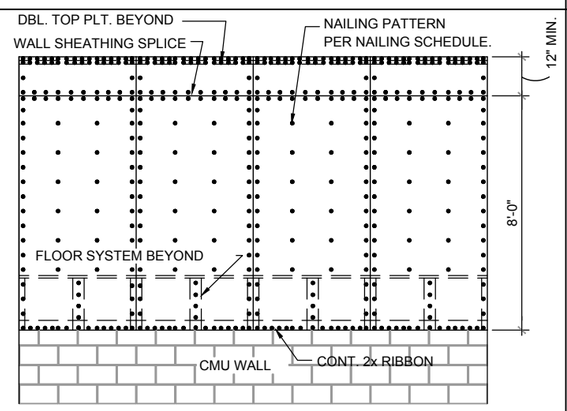


B SHEATHING ELEV.
2-STORY FRAMING N.T.S.

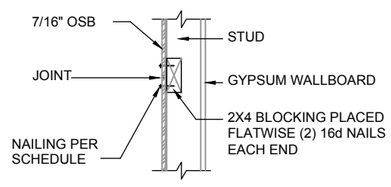


C SHEATHING BLOCKING
@HORIZONTAL JOINTS N.T.S

7 D5 SHEATHING UPLIFT DETAILS

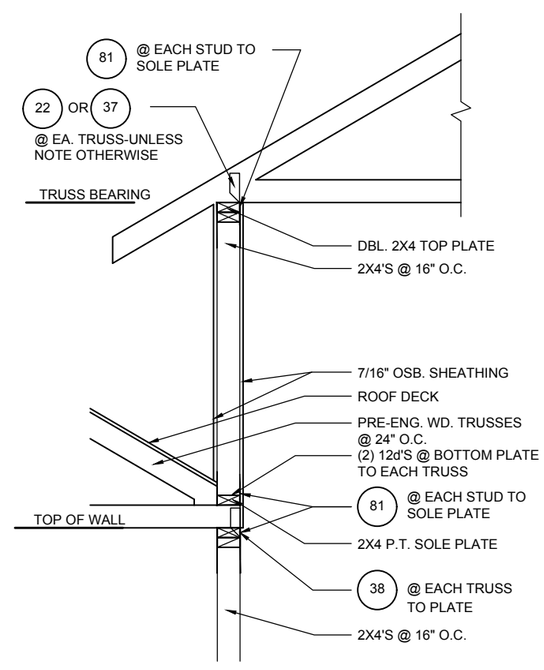


6 D5 DETAIL
1/2"=1'-0" (11X17) 1"=1'-0" (22X34)

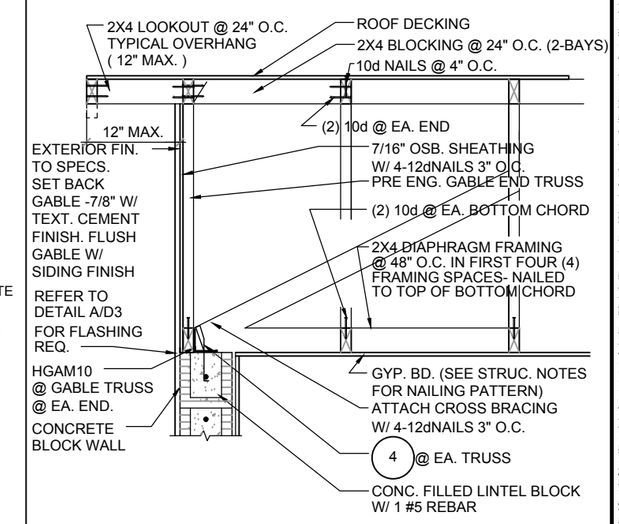


G-5 D5 GABLE END
1/2"=1'-0" (11X17) 1"=1'-0" (22X34)

DISCLAIMER: CONTRACTOR/SUB-CONTRACTOR IS RESPONSIBLE TO REVIEW ALL INFORMATION CONTAINED HEREIN PRIOR TO COMMENCEMENT OF CONSTRUCTION. PARK SQUARE HOMES IS NOT RESPONSIBLE FOR ANY MISINTERPRETATIONS, ERRORS, OMISSIONS OR CUSTOM CHANGES MISSED AND NOT REPORTED PRIOR TO CONSTRUCTION. NO EXCEPTIONS.

THIS STRUCTURE IS DESIGNED IN ACCORDANCE WITH THE 8th EDITION, 2023 OF THE FLORIDA BUILDING CODE-RESIDENTIAL AND IS CERTIFIED AS SUCH

PARK SQUARE HOMES RESERVES COPYRIGHT & OTHER RIGHTS RESTRICTING THESE DOCUMENTS TO THE ORIGINAL SITE OR PURPOSE FOR WHICH THEY WERE PREPARED. REPRODUCTIONS, CHANGES OR ASSIGNMENTS ARE PROHIBITED.

LOT: 0000, COMMUNITY

Park Square HOMES
A DIVISION OF PARK SQUARE ENTERPRISES, INC.
5200 Vineland Road, Suite 200
Orlando, Florida 32811
Phone: (407) 529 - 3000

TEG
THOMPSON ENGINEERING GROUP, INC.
4401 Vineland Road Suite A6 Orlando, FL 32811
Phone: (407) 734-1445
Fax: (407) 734-1790
www.teg1.com

STRUCTURAL DETAILS

1585 CRUSADE
40' EXPLORATION SERIES

| REVISIONS | |
|---|---|
| DELTA # | DATE |
| | |

DATE: 09-05-25
SCALE: AS NOTED
DRAWN: MW
SHEET:
D5